CR 120 (5)

Cat. nr. **43E**
Art. nr. **PP_AD.089.E43A.00 (v02)**
Edition **06/2022**

Reynaers Aluminium

Together for better

www.reynaers.com

Inhoud
Sommaire
Content
Inhalt

Reynaers Aluminium

Inhoud

Algemene informatie

Algemene informatie systeme

Profielen

Doorsnedetekeningen

Werktekeningen

Montagetekeningen

Toebehoren

Reynaers Aluminium

Sommaire

Généralités

Généralités séries

Profilés

Sections des noeuds

Coupes et débits

Fabrication et montage

Accessoires

Reynaers Aluminium

Content

General Information

General Information System

Profiles

Section drawings

Work drawings

Assembly drawings

Accessories

Inhalt

Allgemeine Information

Allgemeine Information Syste

Profile

Profilkombinationen

Werkzeichnungen

Montagezeichnungen

Zubehör

43E.A.001	03/2008	D0041537	43E.C.058	03/2008	D0070581
43E.A.002	03/2008	D0041538	43E.C.059	03/2008	D0040870
43E.B.000_01.001	08/2017	PD.089.E43A.01-DU	43E.C.059_01.001	08/2017	
43E.B.000_01.002	08/2017	PD.089.E43A.01-FR	43E.C.060	24/06/2022	D0069788
43E.B.000_01.003	08/2017	PD.089.E43A.01-EN	43E.C.061	03/2008	D0040872
43E.B.000_01.004	08/2017	PD.089.E43A.01-GE	43E.C.062	08/2017	D0069789
43E.C.001	27/06/2022	D0070204	43E.C.063	08/2017	D0069790
43E.C.002	24/06/2022	D0070205	43E.C.064	24/06/2022	D0069792
43E.C.003	24/06/2022	D0070206	43E.C.065	08/2017	D0069791
43E.C.004	24/06/2022	D0070207	43E.C.066	08/2017	D0040878
43E.C.005	02/12/2020	D0070208	43E.C.067	03/2008	D0069504
43E.C.006	24/06/2022	D0070209	43E.C.068	03/2008	D0040879
43E.C.007	24/06/2022	D0070210	43E.C.069	08/2017	D0040923
43E.C.007_01.001	24/06/2022	D0070211	43E.C.070	21/09/2018	D0004361
43E.C.009	27/04/2021	D0070213	43E.C.071	21/09/2018	D0004353
43E.C.010	08/2017	D0070214	43E.C.071_02.001	27/06/2022	D3002161
43E.C.011	24/06/2022	D0070215	43E.C.071_02.002		
43E.C.012	24/06/2022	D0070216	43E.C.072	08/2017	D0040926
43E.C.013	08/2017	D0070217	43E.C.073	08/2017	D0040934
43E.C.014	08/2017	D0070218	43E.C.074	03/2008	D0069506
43E.C.015	21/09/2018	D0070219	43E.C.075	08/2017	D0040936
43E.C.016	24/06/2022	D0070220	43E.C.075_02.001		
43E.C.017	24/06/2022	D0070221	43E.C.077	21/09/2018	D0022631
43E.C.018	24/06/2022	D0070222	43E.C.078	21/09/2018	D0022836
43E.C.019	24/06/2022	D0070223	43E.C.081_01.001	08/2017	D2001214
43E.C.020	08/2017	D0070224	43E.C.081_01.002	08/2017	D2001215
43E.C.021	08/2017	D0070333	43E.C.083	18/05/2022	D0027591
43E.C.022	08/2017	D0069277	43E.C.085	21/09/2018	D0004213
43E.C.023	18/05/2022	D0069650	43E.C.086	08/2017	D0040964
43E.C.023_02.001			43E.C.088	03/2008	D0069324
43E.C.025	08/2017	D0027583	43E.C.089	03/2008	D0040975
43E.C.026	08/2017	D0069283	43E.C.090	03/2008	D0027592
43E.C.027	08/2017	D0070118	43E.C.091	21/09/2018	D0022628
43E.C.028	03/2008	D0069703	43E.C.092	03/2008	
43E.C.029	03/2008	D0040793	43E.D.001	03/2008	
43E.C.029_02.001			43E.D.002	24/06/2022	D0069816
43E.C.029_02.002			43E.D.003	08/2017	D0069817
43E.C.030_01.001	24/06/2022	D0100957	43E.D.004	08/2017	D0069820
43E.C.031	08/2017	D0040796	43E.D.005	03/2008	D0069821
43E.C.031_02.001			43E.D.006	08/2017	D0069861
43E.C.033	18/05/2022	D0040803	43E.D.006_02.001		
43E.C.034	08/2017	D0027584	43E.D.008	08/2017	D0069863
43E.C.035	18/05/2022	D0004343	43E.D.009	24/06/2022	D0069864
43E.C.036_01.001	24/06/2022	D2001216	43E.D.009_01.001	08/2017	D2001514
43E.C.037	08/2017	D0027588	43E.D.009_01.002	08/2017	D2001515
43E.C.038	03/2008	D0022629	43E.D.009_01.003	24/06/2022	D2001516
43E.C.039	21/09/2018	D0004348	43E.D.009_01.004	08/2017	D2001551
43E.C.039_02.001			43E.D.010	18/05/2022	D0004374
43E.C.041	03/2008	D0040838	43E.D.011	24/06/2022	D0070120
43E.C.041_02.001			43E.D.012	18/05/2022	D0069360
43E.C.043	21/09/2018	D0040839	43E.D.013	18/05/2022	D0069362
43E.C.044	03/2008	D0040842	43E.D.014	18/05/2022	D0069498
43E.C.044_01.002	08/2017		43E.D.015	02/12/2020	D0069352
43E.C.045	21/09/2018	D0040836	43E.D.015_02.001		
43E.C.046	03/2008	D0022573	43E.D.016_01.001	18/12/2018	D2001635
43E.C.047	03/2008	D0022811	43E.D.016_01.002	18/12/2018	D2001636
43E.C.048	08/2017	D0022816	43E.D.017	18/05/2022	D0069335
43E.C.048_01.001	08/2017	D2001588	43E.D.018	08/2017	D0069370
43E.C.048_01.002	08/2017	D2001589	43E.D.020	21/09/2018	D0069385
43E.C.049	18/05/2022	D0040844	43E.D.021	18/05/2022	D0069386
43E.C.050	03/2008	D0040849	43E.D.022	18/05/2022	D0069383
43E.C.051	03/2008	D0040850	43E.D.023	18/05/2022	D0069384
43E.C.052	18/05/2022	D0069501	43E.D.026	27/06/2022	D0069923
43E.C.052_01.001	08/2017	D2001546	43E.D.028	24/06/2022	D0070123
43E.C.052_01.002	08/2017	D2001547	43E.D.029	08/2017	D0070124
43E.C.052_01.003	08/2017	D2001548	43E.D.030	08/2017	D0070125
43E.C.052_01.004	08/2017	D2001549	43E.D.030_01.001	24/06/2022	D0100970
43E.C.053	21/09/2018	D0070580	43E.D.030_01.002	24/06/2022	D0100971
43E.C.053_01.001	08/2017		43E.D.031	18/05/2022	D0069367
43E.C.057	27/04/2021	D0040867	43E.D.032	03/2008	

43E.D.033	08/2017	D0069379
43E.D.033_02.001		
43E.E.000_02.001		
43E.E.002	24/06/2022	D0069799
43E.E.006	24/06/2022	D0069802
43E.E.008	24/06/2022	D0069803
43E.E.010	27/04/2021	D0069804
43E.E.012	08/2017	D0069805
43E.E.014	24/06/2022	D0070595
43E.E.015_01.001	24/06/2022	D0077743
43E.E.016	18/05/2022	D0004382
43E.E.018	08/2017	D0004383
43E.E.020	21/09/2018	D0004384
43E.E.022	03/2008	D0004385
43E.E.024	24/06/2022	D0069811
43E.E.026	08/2017	D0069812
43E.E.028	08/2017	D0069813
43E.E.029_01.001	08/2017	D0077744
43E.E.032	03/2008	
43E.F.001	03/2008	
43E.F.002	24/06/2022	D0069866
43E.F.004	03/2008	D0069865
43E.F.006	21/09/2018	D0069867
43E.F.008	24/06/2022	D0069868
43E.F.009_01.001	24/06/2022	D2001637
43E.F.009_01.003	21/09/2018	D2001638
43E.F.009_01.005	24/06/2022	D2001662
43E.F.009_01.007	21/09/2018	D2001661
43E.F.009_02.001	27/06/2022	D3010869
43E.F.009_01.009	21/09/2018	D2001663
43E.F.010	21/09/2018	D0070129
43E.F.012	03/2008	D0070252
43E.F.014	21/09/2018	D0070130
43E.F.016	24/06/2022	D0069869
43E.F.018	21/09/2018	D0069871
43E.F.020	24/06/2022	D0069872
43E.F.022	24/06/2022	D0070131
43E.F.024	08/2017	D0070132
43E.F.026	08/2017	D0023421
43E.F.028	08/2017	D0070133
43E.F.030	24/06/2022	D0070134
43E.F.032	08/2017	D0041444
43E.F.034	24/06/2022	D0070135
43E.F.036	08/2017	D0070136
43E.F.038	08/2017	D0070262
43E.F.040	24/06/2022	D0070138
43E.F.042	24/06/2022	D0070139
43E.F.044	24/06/2022	D0070140
43E.F.046	24/06/2022	D0070141
43E.F.048	08/2017	D0041280
43E.F.050	08/2017	D0041281
43E.F.052	24/06/2022	D0070142
43E.F.054	24/06/2022	D0070143
43E.F.056	24/06/2022	D0070144
43E.F.057_01.001	24/06/2022	D2001608
43E.F.057_01.003	08/2017	D2001609
43E.F.057_01.005	24/06/2022	D2001610
43E.F.057_01.007	08/2017	D2001611
43E.F.057_01.009	08/2017	D2001363
43E.F.057_01.011	24/06/2022	D2001604
43E.F.057_01.013	08/2017	D2001605
43E.F.057_01.015	24/06/2022	D2001606
43E.F.057_01.017	24/06/2022	D2001607
43E.F.057_01.019	24/06/2022	D2001614
43E.F.057_01.021	08/2017	D2001613
43E.F.057_01.023	08/2017	D2001612
43E.F.058	24/06/2022	D0070145
43E.F.060	24/06/2022	D0070146
43E.F.062	03/2008	D0070147
43E.F.064	08/2017	D0070253

43E.F.066	08/2017	D0070254
43E.F.068	08/2017	D0070192
43E.F.070	08/2017	D0004401
43E.F.072	08/2017	D0070193
43E.F.074	08/2017	D0041292
43E.F.076	08/2017	D0070255
43E.F.078	21/09/2018	D0004404
43E.F.079_01.001	08/2017	D2001552
43E.F.079_01.003	08/2017	D2001553
43E.F.079_01.005	08/2017	D2001554
43E.F.080	24/06/2022	D0070196
43E.F.082	08/2017	D0070256
43E.F.083_02.001	27/06/2022	D3002350
43E.F.083_02.003	27/06/2022	D3002358
43E.F.083_02.005	27/06/2022	D3002360
43E.F.083_02.007	27/06/2022	D3002364
43E.F.084	03/2008	
43E.G.001	24/06/2022	D0070345
43E.G.002	24/06/2022	D0070346
43E.G.003	24/06/2022	D0070347
43E.G.004	08/2017	D0070348
43E.G.005	08/2017	D0070349
43E.G.006	08/2017	D0070508
43E.G.007	08/2017	D0069426
43E.G.008	24/06/2022	D0041354
43E.G.009	03/2008	D0041355
43E.G.010	18/05/2022	D0041356
43E.G.011	18/05/2022	D0041357
43E.G.012	18/05/2022	D0041358
43E.G.013	18/05/2022	D0041359
43E.G.014	18/05/2022	D0070375
43E.G.015	08/2017	D0070257
43E.G.016	24/06/2022	D0041360
43E.G.017	08/2017	D0041361
43E.G.018	24/06/2022	D0041363
43E.G.019	21/09/2018	D0041364
43E.G.020	21/09/2018	D0070087
43E.G.021	24/06/2022	D0070093
43E.G.022	24/06/2022	D0070094
43E.G.022_01.001	08/2017	D2001592
43E.G.022_01.002	08/2017	D2001591
43E.G.022_01.003	08/2017	D2001518
43E.G.022_01.004	08/2017	D2001519
43E.G.023	18/05/2022	D0041368
43E.G.024	18/05/2022	D0069512
43E.G.025	18/05/2022	D0041369
43E.G.027	21/09/2018	D0041370
43E.G.028	24/06/2022	D0041371
43E.G.029	08/2017	D0041373
43E.G.030	08/2017	D0041372
43E.G.031	03/2008	D0041374
43E.G.032	08/2017	D0041375
43E.G.033	03/2008	D0041376
43E.G.034	24/06/2022	D0041377
43E.G.035	24/06/2022	D0041378
43E.G.036	24/06/2022	D0041379
43E.G.037	24/06/2022	D0041380
43E.G.038	24/06/2022	D0041381
43E.G.039	08/2017	D0041382
43E.G.040	08/2017	D0041383
43E.G.041	03/2008	D0041384
43E.G.042	03/2008	D0041385
43E.G.043	08/2017	D0070103
43E.G.044	03/2008	D0041386
43E.G.045	24/06/2022	D0041389
43E.G.046	21/09/2018	D0041388
43E.G.047	08/2017	D0070115
43E.G.048	03/2008	D0070108
43E.G.049	08/2017	D0041391
43E.G.050	08/2017	D0041392

A

Reynaers Aluminium

Algemene informatie
Généralités
General Information
Allgemeine Information

SYMBOLENLIJST
LISTE DES SYMBOLES
LIST OF SYMBOLS
ZEICHENERKLAERUNG

Profiel
Profilé
Profile
Profil

A dm²/m — Anodisatie- of lakoppervlakte
Surface anodisée ou laquée
Anodizing or coating surface
Eloxierte oder lackierte Oberfläche

P dm²/m — Polijstoppervlakte
Surface à polir
Polishing surface
Polieroberfläche

Lm — Lengte
Longueur
Length
Länge

H B D — Afmetingen
Dimensions
Dimensions
Abmessungen

Toepassing
Application
Application
Anwendung

Bevestigingsmiddelen
Moyens de fixation
Fixations
Befestigungsmittel

Schroeven niet meegeleverd
Fourniture sans vis
Delivered without screws
Lieferung ohne Schrauben

1 2 3 · — Montagevolgorde
Ordre de montage
The order of assembly
Montagereihenfolge

X — Dichtingsmiddel
Matière d'étanchéité
Sealing agent
Abdichtungsmittel

GLUE — Verlijmen
Coller
Glue
Verkleben

Vulcaniseerlijm
Colle vulcanisante
Vulcanizing glue
Vulkanisierkleber

Referentiemaat
Dimension de référence
Reference dimension
Referenzmaß

M — Merkteken
Marquage
Mark
Merkzeichen

SSG — Struktureel gelijmd glaswerk
Vitrage extérieur collé
Structural sealing glazing
UV-beständiger Scheibenrandverbund

Primaire zichtzijde van een profiel
Côté visible primaire d'un profilé
Primary visible side of a profile
Primäre sichtbare Seite eines Profils

Secundaire zichtzijde van een profiel
Côté visible secondaire d'un profilé
Secondary visible side of a profile
Sekund. sichtbare Seite eines Profils

! Bicolor — Kleur buitenschaal (e) eerst aangeven in geval van bicolor (.69)
En cas de bicolore (.69) il faut indiquer d'abord la couleur du profilé extérieur (e)
For bicolor profiles (.69) first of all one should indicate the colour of the outer profile (e)
Falls zweifarbig (.69) soll man erst die Farbe des Außenprofils (e) angeben

Verstek
Onglet
Mitre
Gehrung

— Aantal
Nombre
Number
Anzahl

Zie pagina
Voir page
See page
Siehe Seite

Type toebehoren
Type accessoires
Type accessories
Typ Zubehör

Glasmaten
Dimensions des vitres
Glass sizes
Glasmaße

Toepassing
Application
Utilization
Anwendung

Asymmetrisch profiel
Profilé asymétrique
Asymmetrical profile
Asymmetrisches Profil

Gereedschap
Outillage
Tool
Werkzeug

Gereedschappen en machines voor ontwatering van kader
Outillage et machinerie pour dormant
Tools and machinery for draining outer frame
Werkzeuge und Maschinen für Entwässerung Blendrahmen

Gereedschappen en machines voor ontwatering van vleugel
Outillage et machinerie pour drainage ouvrant
Tools and machinery for draining vent
Werkzeuge und Maschinen für Entwässerung Flügel

Gereedschappen en machines voor T-verbinding
Outillage et machinerie pour jonction-T
Tools and machinery for T-brackets
Werkzeuge und Maschinen für T-Verbinder

Gereedschappen en machines voor krukuitsparing
Outillage et machinerie pour fermeture
Tools and machinery for closure
Werkzeuge und Maschinen für Beschläge

Multifunctionele matrijs
Matrice multifonctionnelle
Multifunctional punch tool
Mehrzweckstanzwerkzeug

Geleide matrijs
Matrice guidée
Punch tool
Stanzwerkzeug

Handmatig gereedschap
Outillage manuel
Manual tools
Handwerkzeuge

Pagina
Page
Page
Seite

Laatste editie
Dernière édition
Last edition
Letzte Edition

A

D0041537

SYMBOLENLIJST
LISTE DES SYMBOLES
LIST OF SYMBOLS
ZEICHENERKLAERUNG

Reynaers Aluminium

A

Pershoekverbinding
Equerre à sertir
Crimp corner cleat
Presseckverbinder

Hoekverbinding met schroefhoek
(*) enkel voor klembaar beslag
Equerre à blocage (*) seulement
pour accessoires encastrables
Corner cleat with screw
(*) only for clamping accessories
Eckverbinder mit Spannschraube
(*) nur für klemmbaren Beschlag

Verstelbare schroefhoek
Equerre à visser réglable
Adjustable screw corner cleat
Verstellbarer Schraubeckwinkel

Hoekverbinding met nagel
Equerre avec cheville
Corner cleat with drive pin
Eckverbinder mit Stift

Steunhoek
Cale de feuillure
Rebate support
Glasanschlagwinkel

T-verbinding met schroef
Jonction-T avec vis
T-bracket with screw
T-Verbinder mit Schraube

Verstelbare T-verbinding
Jonction-T réglable
Adjustable T-bracket
Verstellbarer T-Verbinder

Vulhoek
Equerre de remplissage
Corner support
Fülleckwinkel

Bevestiging drager
Fixation chevon
Fixation rafter
Beferstigung Dachsparren

Binnenbeglazingsdichting
Joint à bourrer
Inner glazing gasket
Innenverglasungsdichtung

Buitenbeglazingsdichting
Joint de vitrage extérieur
Outer glazing gasket
Außenverglasungsdichtung

Dichting
Joint
Gasket
Dichtung

Dichting veranda
Joint véranda
Gasket veranda
Dichtung Wintergarten

Borsteldichtingen
Joints brosse
Brushes
Bürstendichtungen

Isolerend vulstuk
Pièce de remplissage isolante
Insulating filling piece
Isolierendes Füllstück

Raamscharnieren
Paumelles pour fenêtres
Window hinges
Fensterbänder

Glassteunen
Supports cale de vitrage
Glazing supports
Klotzbrücken

Afdekkap voor waterafvoersleuven
Capuchon écoulement d'eau
Weep hole cover
Abdeckkappe Entwässerung

Afdichting goot
Fermeture gouttière
End piece gutter
Endkappe Rinne

Stootplaat
Arrêt vitrage toiture
Glass panel stop
Endstück Verglasung

Zaagmachine
Tronçonneuse
Sawing machine
Kreissäge

Veranda type 1
Veranda type 1
Veranda type 1
Veranda Typ 1

Veranda type 2
Veranda type 2
Veranda type 2
Veranda Typ 2

Veranda type 3
Veranda type 3
Veranda type 3
Veranda Typ 3

Veranda type 4
Veranda type 4
Veranda type 4
Veranda Typ 4

Veranda type 5
Veranda type 5
Veranda type 5
Veranda Typ 5

Veranda type 6
Veranda type 6
Veranda type 6
Veranda Typ 6

Gelaagd glas
Verre feuilleté
Laminated glass
Verbundglas

Glas
Verre
Glass
Glas

Diversen
Divers
Miscellaneous
Diverse

Klemstuk
Clip
Clip
Federklemme

Nokbevestiging
Fixation de la faîtière
Fixation of the ridge
Firstanschluß

Variant
Variante
Variant
Variante

Verankeringen
Ancrages
Fixing lugs
Verankerungen

Goot
Gouttière
Gutter
Rinne

Dakvenster
Tabatière
Attic window
Dachfenster

Kunststof dakbedekking
Toiture synthétique
Synthetic roofing
Kunststoff Dachdeckung

Zelfklevende dubbelzijdige tape
Bande autocollante 2 faces
Self-adhesive double sided tape
Selbstklebendes beidseitiges Band

Profielen met hoge isolatiewaarde
Profilés avec valeur d'isolation élevée
Profiles with high insulation value
Profile mit höhem Isolationwert

Profielen voor grote overspanning
Prodilé pour grande portéé
Profile for big span
Profile für grosse Spannweite

D0041538

B

Reynaers Aluminium

Algemene informatie systemen
Généralités séries
General Information System
Allgemeine Information System

VERWERKINGSVOORSCHRIFTEN

I. ALGEMEEN

Zie catalogus “1.Algemene informatie” (089.C01E.00)

II. VERWERKINGSVOORSCHRIFTEN CONCEPT ROOF 120

II.1 CONSTRUCTIEVOORSCHRIFTEN

Om blijvend een perfect eindproduct te garanderen, dienen tijdens de verwerking bepaalde regels in acht genomen te worden.

II.1.1 Verspanende bewerkingen

Onder verspanende bewerkingen wordt verstaan: alle mechanische bewerkingen zoals zagen, frezen, boren, ponsen en knippen. Voor gelakte profielen is het essentieel dat de laklagen aan de randen niet loskomen tijdens deze bewerkingen. Het is daarom van groot belang voor de kwaliteit van de verbindingen dat:

- het verspanende gereedschap geschikt en voldoende scherp is.
- de machines goed afgesteld en afgeregeld zijn (bv. toerental).
- er regelmatig onderhoud en controle van het gereedschap uitgevoerd wordt conform de voorschriften van de machineleveranciers.
- het verspanende gereedschap correct en voldoende gesmeerd wordt:
  smeerstick (art.nr. 086.9191.UN) voor zaagbladen
  snijmiddel (art.nr. 086.9175.UN) voor ponsgereedschap
  of de door de machineleveranciers voorgeschreven koel- en smeermiddelen;
- de correcte klemblokken worden gebruikt (zie montagetekeningen “*klemblokken*”).
- de aan- en afvoertafel vrij zijn van spanen en verontreinigingen.
- eventuele koeling gebeurt met chemisch neutrale producten die de oppervlaktebehandeling niet aantasten.

Het verdient aanbeveling om spanen die ontstaan tijdens het verspanen af te zuigen. Alle zaagsnedes die een verbinding vormen zoals: hoek- en T-verbindingen, dienen beschermd te worden met Reynaprotector (art.nr. 086.9208.SY + 086.9225.--). Andere zaagsnedes zoals: glaslatten, klemlijsten,... dienen beschermd te worden met Reynastick (art.nr. 086.9600.XX), alsook freessnedes, boorgaten, ponsgaten,…

Voor het correct functioneren, het behalen van de performanties en de esthetiek van het eindproduct is het van groot belang dat de profielen binnen nauwe toleranties verzaagd worden. Indien er onenigheid zou bestaan over wat er onder acceptabele afwijkingen verstaan wordt kan men de richtlijnen van instanties als het Aluminium Center Belgium raadplegen.

Positie/klemming van de profielen tijdens het zagen:
De positie van de profielen op de zaagtafel tijdens het verzagen is zeer belangrijk en is de basis om perfecte verstekken te verkrijgen. Bij het inklemmen dient rekening gehouden te worden met de beweegrichting van het zaagblad ten opzichte van het profiel (zie schema’s hieronder). We onderscheiden primaire (1) en secundaire (2) klemming. Op de primaire klemming wordt de grootste druk uitgeoefend. De noodzaak van de secundaire klemming is afhankelijk van de exacte vormgeving van het profiel.

De klemblokken moeten gebruikt worden:

- om te vermijden dat speling op de profielen de kwaliteit van het verstek zou beïnvloeden;
- om te vermijden dat de profielen zouden kantelen op de tafel.

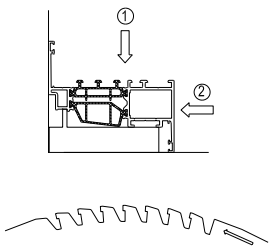

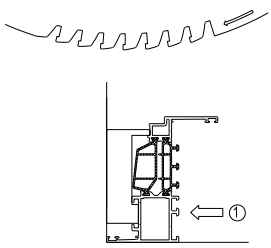

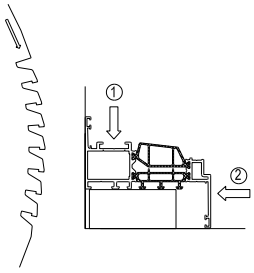

FOUTIEVE KLEMMING

FOUT: De primaire klemming drukt voorbij het kantelpunt van het profiel waardoor deze scheef komt te staan.
GEVOLG: Scheve zaagsnede: de buitenzijde is korter dan de binnenzijde.
RESULTAAT: Na het verbinden van de hoeken is het verstek aan de binnenzijde dicht maar is er aan de buitenzijde een opening zichtbaar.

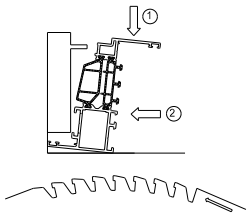

II.1.2 Assemblage

B

Wij maken de volgende onderverdeling:
1. Ontwatering en uitsparingen voor het beslag;
2. T-verbindingen;
3. Hoekverbindingen;
   - Persen
   - Schroeven
4. Dichtingen

1.2.1 Dakraam

1.2.1.1 Hoekverbindingen

Stappen:
a. Correct zagen, ponsen of boren.
b. Beschermen van de zaagsnedes door:
- ontbramen (indien noodzakelijk);
- verwijderen van stof en zaagresten op de zaagsnede en in de profielkamer;
- ontvetten (REYNAFINISH art.nr. 086.9210.--);
- aanbrengen van anticorrosieproduct (REYNAPROTECTOR art.nr. 086.9209.--); droogtijd: ca. 1 uur.
c. Afdichten: op de zaagsnedes een neutraal, elastisch dichtingsmiddel aanbrengen.
d. Verlijmen: aanbrengen van een goedgekeurde dichtingslijm
(tweecomponentenlijm REYNASEAL DUO art. nr. 084.9080.--):
- in de profielkamer;
- op de plaats waar de steunhoek komt.
e. Verbinding tot stand brengen: de hoekstukken kunnen ingebracht worden en vervolgens wordt de mechanische hoekverbinding tot stand gebracht, hetzij door persen, hetzij door schroeven.
f. De samengevoegde elementen dienen enkel aan de zichtvlakken gereinigd te worden van lijmresten en dit uitsluitend met een niet-agressief middel (REYNAFINISH art.nr. 086.9210.--).

1.2.1.2 Ontwatering

Stappen:
a. Correct boren of frezen.
b. Beschermen van de bewerkte vlakken door:
- ontbramen (indien noodzakelijk);
- verwijderen van stof en spanen;
- ontvetten (REYNAFINISH art.nr. 086.9210.--);
- aanbrengen van anticorrosieproduct (REYNAPROTECTOR art. nr. 086.9209.--); droogtijd: ca. 1 uur.
Aandachtspunten bij de ontwatering:
- Ontwateringsgaten die aan de buitenzijde van het raam zichtbaar zijn, worden afgedekt met kunststofkapjes.
- Eventueel binnendringend water moet vlot en gecontroleerd kunnen afgevoerd worden en de druk in de binnenkamers moet gelijk blijven aan die van de buitenlucht.
- Bij elk raam worden er ontwateringsopeningen voorzien met een maximale afstand tot de hoek van 250 mm:
2 openingen tot raambreedte van 1000 mm
3 openingen tot raambreedte van 1500 mm
enz... opgaand per 500 mm.
- De minimale oppervlakte van deze openingen bedraagt 50 mm² per opening, hetzij een ronde opening van minimum 8 mm diameter, hetzij langwerpige openingen van minimaal 5 mm bij 15 mm.
- Aan de zijkant bovenaan van de vleugel wordt steeds minstens 1 opening van minimum 5 mm geboord.
De functie hiervan is de drukegalisatie rond de beglazing te waarborgen.

- Steeds op het laagste punt van de glassponning afwateren.

1.2.1.3 Dichtingen

Alle dichtingsrubbers zijn van weer- en verouderingsbestendig EPDM. De verwerking ervan dient zorgvuldig te gebeuren, aangezien hiervan de dichtheid van het venster afhangt.

Het aanbrengen van de beglazingsdichtingen en andere dichtingen.

Stappen:
1. Correct versnijden: het versnijden van de beglazingsdichting dient met een speciale schaar (art.nr. 090.0121.UN) te gebeuren en de dichting kan naargelang de soort profielverbinding in verstek of recht versneden worden. Benodigde overlengte (ca 10 mm per meter) dient voorzien te worden.
2. Aanbrengen dichting: de dichtingen worden aangebracht in de daarvoor voorziene groeven van de profielen; de overlengte wordt lichtjes opgestuikt om uitzetten of krimpen op te vangen. Moeilijkheden bij het inbrengen kunnen opgevangen worden met siliconenspray (art.nr. 086.9551.--).
3. Verlijmen (afdichten): in de hoeken dient de beglazingsdichting verlijmd te worden met vulkaniseerlijm (REYNAFIX art.nr. 084.9108.--). Doordat de verbinding elastisch blijft, sluit de dichting ook in de hoeken perfect aan.

1.2.2 Verandaprofielen algemeen

1.2.2.1 Profielverbindingen

Stappen:
a. Correct zagen, ponsen of boren.
b. Beschermen van de zaagsnedes door:
- ontbramen (indien noodzakelijk);
- verwijderen van stof en zaagresten op de zaagsnede en in de profielkamer;
- ontvetten (REYNAFINISH art.nr. 086.9210.--);
- aanbrengen van anticorrosieproduct (REYNAPROTECTOR art.nr. 086.9209.--); droogtijd: ca. 1 uur.
c. Speciale dichtingen dienen te gebeuren volgens aanduidingen in cataloog.

1.2.2.2 Ontwatering en dichtingen

Volgens aanduidingen in cataloog.

II.2 MONTAGEVOORSCHRIFTEN

II.2.1 Stockage

De stockage van onafgewerkte of afgewerkte elementen dient steeds in een droge, vorstvrije ruimte te gebeuren

II.2.2 Inbouw in de ruwbouw

De bevestiging aan de ruwbouw gebeurt ofwel rechtstreeks door de sponning van de profielen met roestvrij stalen afstandsschroeven, ofwel met behulp van bevestigingsankers (zie catalogus “Reynaconnect”).
- De bevestigingen mogen niet minder dan 40 mm van de rand van de ruwbouw worden aangebracht.
- De verankering mag geenszins het draagvermogen van de aangrenzende bouwonderdelen beïnvloeden.
- Alle verankeringen, voor zover niet uit aluminium of roestvrij staal, dienen afdoende tegen corrosie te zijn beschermd en mogen zelf ook geen aantasting van het aluminium veroorzaken.

De verankeringen dienen dusdanig aangebracht te worden dat ze eventuele zettingen kunnen opvangen. Plaatsing van de ramen: zie specifieke montagevoorschriften voor raam- en deursystemen.
De verankeringen dienen dusdanig gedimensioneerd te zijn zodat zij het eigen evenwicht van de optredende belastingen zoals sneeuw, wind- en onderhoudsbelasting, enz. ... kunnen weerstaan.

II.2.2 Inbouw van het beslag

Keuze van bevestigingspunten, aantal sluitpunten, aantal scharnieren, max. vleugelgewicht, max. vleugelafmetingen, toegepast vleugelprofiel e.a. dient te gebeuren volgens de richtlijnen in systeem- en beslagcatalogus. Glijdende en bewegende delen zijn van neutraal vet te voorzien. Bij montage dient men te controleren of het beslag soepel en zonder hapering te bedienen is**.**

II.3 DAKBEDEKKING

Dakbedekking (glas of kunststofplaten) dient te gebeuren volgens de geldende plaatselijke normen en/of voorschriften.

RECOMMANDATIONS DE MISE EN OEUVRE

I. GENERAL

Voir catalogue “1. Informations générales” (089.C01E.00)

II. RECOMMANDATIONS DE MISE EN OEUVRE CONCEPT ROOF 120

II.1 RECOMMANDATIONS DE FABRICATION

Afin de garantir un produit final parfait, certaines règles doivent être suivies pendant la fabrication.

II.1.1 Opérations d’usinage.

Par opérations d’usinage on entend: toutes les opérations mécaniques comme le tronçonnage, le fraisage, le forage, le poinçonnage et la découpe. Il est essentiel que la couche de laque des profilés laqués ne se détache pas sur les bords pendant ces opérations. Il est donc très important pour la qualité des assemblages que:

- les outils d’usinage soient adaptés et suffisamment aiguisés;
- les machines soient bien réglées et ajustées (p.ex. régime).
- l'outillage soit régulièrement entretenu et contrôlé conformément aux préconisations des fournisseurs de machines.
- les outils d’usinage soient correctement et suffisamment graissés:
  - bâton lubrifiant (art.n° 086.9191.UN) pour lames de scie;
  - huile de coupe (art.n° 086.9175.UN) pour outils de poinçonnage
  - ou les réfrigérants et lubrifiants prescrits par les fournisseurs des machines;
- les mors de serrage corrects soient utilisés (voir détails de fabrication « blocs de serrage »).
- la table d’aménée ou d’évacuation soit exempte de copeaux et de souillures;
- le refroidissement éventuel se fasse à l’aide de produits chimiquement neutres qui ne corrodent pas le traitement de surface.

Il est recommandé d'aspirer les copeaux produits par les opérations d'usinage. Toutes les coupes des profilés qui forment une jonction comme les équerres d’assemblage angulaires et les jonctions en T doivent être protégées à l’aide de Reynaprotector (art. n° 086.9208.SY + 086.9225.--). Toutes les autres coupes (comme parcloses, fixations...) doivent être protégées à l’aide de Reynastick (art.n°086.9600.06) ainsi que les fraisages, trous d’alésage, perforations...

Dans un souci de bon fonctionnement, de performance et d'esthétique du produit fini, il est très important de tronçonner les profilés dans des tolérances étroites. En cas d'incertitude quant à ce qu'il faut entendre par tolérances acceptables, on consultera les directives d'organismes tels que Aluminium Center Belgium.

Position/serrage des profilés pendant le tronçonnage:
La position des profilés sur la table de sciage pendant le tronçonnage est très importante pour obtenir des onglets parfaits. Le serrage doit tenir compte du sens du mouvement de la scie par rapport au profilé (voir le schéma ci-dessous). Nous distinguons le serrage primaire (1) et le serrage secondaire (2). Le serrage primaire correspond à la plus forte pression. Quant à la nécessité d'un serrage secondaire, elle dépend de la forme exacte du profilé.

Les mors de serrage doivent être utilisés:

- pour éviter que les tolérances sur les profilés influencent la qualité de l’onglet;
- pour éviter que les profilés ne basculent sur la table.

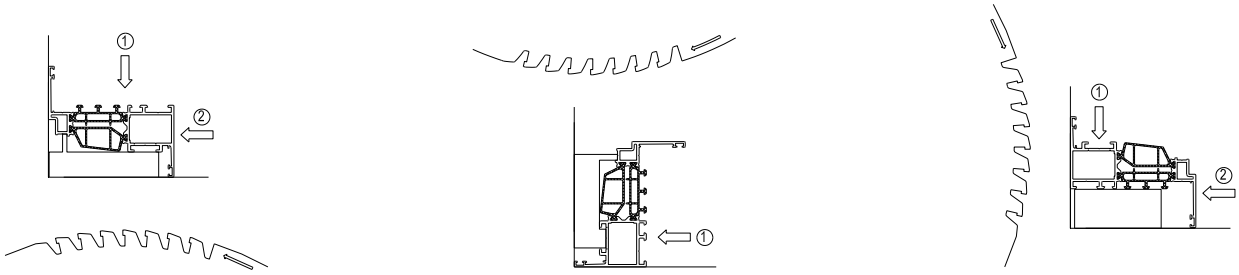

MAUVAIS SERRAGE

DÉFAUT : Le serrage primaire appuie au-delà du point de basculement du profilé, qui se retrouve de biais.
CONSÉQUENCE : Tronçonnage en biais : le côté extérieur est plus court que le côté intérieur.
RÉSULTAT : Après sertissage, l'assemblage sur la face intérieure est fermé, tandis qu'à l'extérieur, l'onglet s'est ouvert.

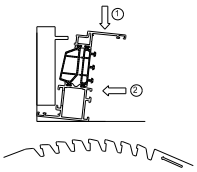

B

II.1.2 Assemblage

Nous distinguons les opérations suivantes:
1. Drainage et découpes pour les accessoires ;
2. Assemblages en T ;
3. Raccords d'angle ;
   - À sertir
   - À visser
4. Joints

1.2.1 Tabatière

1.2.1.1 Raccords d'angle

Etapes :
a. Tronçonnage, poinçonnage ou forage correct.
b. Protection des coupes par:
- ébavurage (si nécessaire);
- enlèvement des poussières et des copeaux de sciage sur la coupe et dans la chambre du profilé;
- dégraissage (REYNAFINISH art.n° 086.9210.--);
- application de produit anti-corrosion (REYNAPROTECTOR art.n° 086.9209.--); temps de séchage: environ 1 heure.
c. Etanchement: appliquer sur les coupes de la matière d'étanchéité neutre et élastique.
d. Encollage: appliquer une colle d'étanchéité approuvée (colle bicomposants REYNASEAL DUO art.n° 084.9080.--):
- dans la chambre du profilé;
- dans la rainure destinée à la cale de feuillure.
e. Assemblage: les équerres peuvent être introduites et ensuite le raccord d'angle mécanique est réalisé, soit en sertissant, en vissant.
f. Sur les éléments composés, les résidus de colle ne doivent être enlevés que des surfaces visibles, et ceci uniquement à l'aide d'un produit non-agressif (REYNAFINISH art.n° 086.9210.--).

1.2.1.2 Drainage

Etapes:
a. Forage ou fraisage correct.
b. Protection des surfaces traitées par:
- ébavurage (si nécessaire);
- enlèvement des poussières et des copeaux;
- dégraissage (REYNAFINISH art.n° 086.9210.--);
- application de produit anti-corrosion (REYNAPROTECTOR art.n° 086.9209.--); temps de séchage: environ 1 heure.
Lors du drainage, il faut prêter attention aux points suivants:
- Les ouvertures de drainage qui sont visibles de l'extérieur de la fenêtre doivent recevoir des capuchons en matière synthétique.
- Ce drainage doit être conçu pour évacuer les eaux d'infiltration éventuelles vers l'extérieur et maintenir la chambre de décompression à la pression atmosphérique.
- Pour chaque fenêtre, des ouvertures de drainage sont prévues à une distance maximale de l'angle de 250 mm:
2 ouvertures jusqu'à une largeur de fenêtre 1000 mm
3 ouvertures jusqu'à une largeur de fenêtre 1500 mm
etc... une ouverture en plus par 500 mm supplémentaires en largeur.
- La surface minimale de ces ouvertures est de 50 mm² par ouverture, soit sous forme d'une ouverture ronde avec un diamètre minimal de 8 mm, soit sous forme d'une ouverture ovale de 5 mm x 15 mm au minimum.
- Sur le haut du côté de l'ouvrant, on fore toujours au moins 1 ouverture de 5 mm de diamètre au minimum. Sa fonction est de garantir l'égalisation de pression autour du vitrage.
- Il faut toujours drainer au niveau du point le plus bas de la feuillure de vitrage.

1.2.1.3 Joints

Tous les joints sont en EPDM résistant aux intempéries et au vieillissement. Leur montage doit se faire soigneusement, puisque l'étanchéité de la fenêtre en dépend.

Application des joints de vitrage et d'autres joints.

Etapes:
1. Découpe correcte: la découpe du joint de vitrage doit se faire avec des ciseaux spéciaux (art.n° 90.0121.UN) et le joint peut être coupé à onglet ou droit en fonction du type de jonction entre les profilés. Une longueur supplémentaire (environ 10 mm par mètre) doit être prévue.
2. Application du joint: les joints sont appliqués dans les rainures des profilés prévues à cet effet; la longueur supplémentaire est légèrement refoulée pour neutraliser la dilatation ou le rétrécissement. Les difficultés de mise en place peuvent être résolues à l'aide d'un aérosol silicone (art.n°086.9551.--).
3. Encollage (étanchement): dans les angles, le joint de vitrage doit être encollé avec de la colle de vulcanisation (REYNAFIX art.n° 084.9108.--). Cette colle permet à la jonction de rester élastique et de garantir parfaitement le rôle du joint même dans les angles.

1.2.2 Profilé véranda généraux

1.2.2.1 Raccordements profilés

Etapes :
a. Tronçonnage, poinçonnage ou forage correct.
b. Protection des coupes par:
- ébavurage (si nécessaire);
- enlèvement des poussières et des copeaux de sciage sur la coupe et dans la chambre du profilé;
- dégraissage (REYNAFINISH art.n° 086.9210.--);
- application de produit anti-corrosion (REYNAPROTECTOR art.n° 086.9209.--); temps de séchage: environ 1 heure.
c. Joints spéciaux selon indications dans le catalogue.

1.2.2.2 Drainage et des joints

Selon indications dans le catalogue.

I.2 RECOMMANDATIONS DE MONTAGE

II.2.1 Stockage

Les éléments non finis et finis doivent seulement être stockés dans un local sec, à l'abri du gel.

II.2.2 Montage dans le gros œuvre

La fixation au gros-œuvre se fait directement à travers les profilés avec des vis d'écartement en inox ou avec des ancrages de fixation (voir catalogue « Reynaconnect »).
- Les fixations ne peuvent pas être appliquées à une distance inférieure à 40 mm du bord du mur du gros œuvre.
- L'ancrage ne peut surtout pas influencer la force portante des éléments de construction contigus.
- Tous les ancrages, pour autant qu'ils ne soient pas en aluminium ou en acier inoxydable, doivent être efficacement protégés contre la corrosion et ne peuvent pas corroder l'aluminium.

Il faut appliquer les ancrages de sorte qu'ils puissent compenser de dilatations éventuelles. Installations des fenêtres: voir prescriptions spécifiques pour systemes portes et fenêtres.
Les ancrages doivent être dimensionnés de sorte qu'ils puissent résister le propre poids des charges comme la neige, la charge due à l'action du vent, charge due à l'entretien, ..., etc.

II.2.3 Montage des accessoires

Le choix des points de fixation, du nombre de points de fermeture, du nombre de charnières, du poids maxi. de l'ouvrant, des dimensions maxi. de l'ouvrant, du profilé de l'ouvrant, etc., respectera les préconisations du catalogue de systèmes et d'accessoires. Les éléments coulissants et mobiles seront lubrifiés à la graisse naturelle. Au montage, on s'assurera que les accessoires fonctionnent avec fluidité et sans à-coups.

II.3 LA TOITURE

La toiture (vitrage ou plaques synthétiques) doit s'effectuer selon les normes et/ou prescriptions locales.

PROCESSING DATA

I. GENERAL

See catalogue “1.General information” (089.C01E.00)

II. PROCESSING DATA CONCEPT ROOF 120

II.1 FABRICATING INSTRUCTIONS

In order to guarantee a perfect end product, the following guidelines should be adhered to during the production process.

II.1.1 Metal-removing operations

Metal-removing operations are understood to mean all mechanical operations such as sawing, milling, drilling, punching and cutting. For painted profiles it is essential that the paint coatings do not come off on the edges during these operations. Therefore it is very important for the quality of the connections that:

- the metal-removing tools are appropriate and sufficiently sharp;
- the machines are well regulated and adjusted (e.g. number of revolutions);
- the tools are regularly maintained and checked in accordance with the instructions of the machine suppliers;
- the metal-removing tools are greased sufficiently and correctly:
  - cutting grease block (art.no. 086.9191.UN) for saw blades,
  - cutting spray (art.no. 086.9175.UN) for punch tools
  - or the cooling agents and lubricants prescribed by the machine suppliers;
- the correct clamp blocks are used; (see assembly drawings ‘clamp blocks’)
- the cutting table is free of swarf and dust;
- possible cooling is done by means of chemically neutral products which do not attack the surface treatment.

It is recommended to vacuum-extract any chips produced during machining. All cuts that form a joint, such as: corner and T-joints, must be protected with Reynaprotector (art.no. 086.9208.SY + 086.9225.--). Other cuts, such as glazing beads, terminal strips, etc. must be protected with Reynastick (art.no. 086.9600.XX), as well as milling cuts, boreholes, punch holes, etc.

To function correctly, and to achieve the performances and aesthetics of the end product, it is very important that the profiles are sawn within close tolerances. If there is disagreement about what is meant by acceptable deviations, the guidelines of bodies such as the Aluminium Center Belgium can be consulted.

Position/clamping of the profiles during cutting:
The position of the profiles on the sawing table during cutting is very important and is the basis to get perfect mitres. When clamping, account should be taken of the direction of movement of the saw blade in relation to the profile (see diagrams below). We distinguish between primary (1) and secondary (2) clamping. The greatest pressure is exerted on the primary clamping. The need for the secondary clamping depends on the exact design of the profile.

The clamp blocks should be used:

a. to ensure that tolerances on the profiles do not influence the quality of the mitre;
b. to ensure that the profiles do not twist on the table.

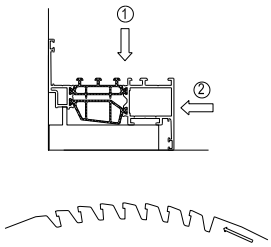

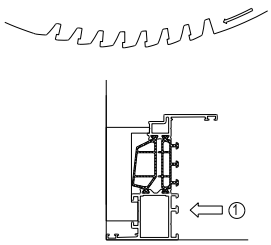

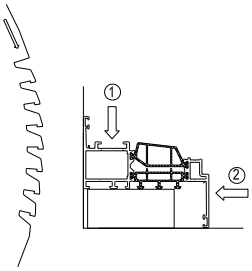

INCORRECT CLAMPING

FAULT:	The primary clamping pressure goes past the tipping point of the profile, causing it to tilt.
CONSEQUENCE:	An oblique saw cut resulting in the outside of the profile being shorter than the inside.
RESULT:	After the corners have been joined, the mitre is closed on the inside but an opening is visible on the outside.

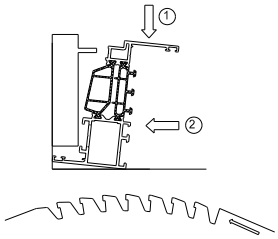

II.1.2 Assembly

We make the following subdivision:
1. Drainage and recesses for the accessories;
2. T-brackets;
3. Corner connections
   - crimping
   - screwing
4. Gaskets

1.2.1 Attic window

1.2.1.1 Corner connections

Steps:
a. Correct sawing, punching or drilling.
b. Protection of the saw cuts by:
- deburring (if necessary);
- removing dust and saw-dust on the saw cut and in the profile chamber;
- degreasing (REYNAFINISH art.no. 086.9210.--);
- applying anti-corrosion product (REYNAPROTECTOR art.no. 086.9209.--); drying time: about 1 hour.
c. Sealing: applying a neutral elastic sealing agent on the saw cuts.
d. Glueing: applying an approved sealing glue (glue for corner connection REYNASEAL DUO art.no. 084.9080.--):
- in the profile chamber;
- in the area where the rebate support will be inserted.
e. Making the connection: the corner cleats can be inserted and the mechanical corner connection can be made, either by crimping or by screwing.
f. The adhesive residue on the visible sides of the completed elements has to be removed by means of a nonaggressive product (REYNAFINISH art.no. 086.9210.--).

1.2.1.2 Drainage

Steps:
a. Correct drilling or milling.
b. Protection of the treated surfaces by:
- deburring (if necessary);
- removing dust and saw-dust ;
- degreasing (REYNAFINISH art.no. 086.9210.--) ;
- applying anti-corrosion product (REYNAPROTECTOR art.no. 086.9209.--) ; drying time: about 1 hour.
Special attention should be paid to the following regarding drainage:
- Drainage holes which are visible on the outside of the window are covered with drainage covers in synthetic material.
- This is to allow infiltrating water to escape outside and also ensures that the profile's chambers remain at atmospheric pressure.
- For windows, drainage holes should be a maximum of 250 mm from the corner:
up to a window width of 1000 mm: 2 drainage holes up to a window width of 1500 m: 3 drainage holes.
Additional holes are required every 500 mm.
- The minimum surface of these openings is 50 mm² per opening, either a round opening of minimum 8 mm diameter, or elongated openings of minimum 5 mm by 15 mm.
- On the side at the top of the vent 1 opening of minimum 5 mm should always be drilled. Its function is to guarantee the pressure equalization around the glazing.
- Always drain at the lowest point of the glass rebate.

1.2.1.3 Gaskets
All gaskets are of EPDM resistant to weathering and ageing. They should be carefully applied since the tight sealing of the window depends on their correct application.

Applying the glazing gaskets and other gaskets.

Steps:
1. Correct cutting: the glazing gasket should be cut with special gasket shears (art.no. 090.0121.UN) and can be cut straight or mitred according to the kind of profile connection. Extra overhanging (about 10 mm per metre) is required.
2. Application of the gasket: the gaskets are applied in the appropriate grooves within the profiles; they should be cut slightly longer than is necessary to compensate for any shrinkage that may occur. Difficulties in applying the gasket can be solved by the use of silicone spray (art.no. 086.9551.--).
3. Glueing (sealing): in the corners, glazing gaskets should be glued with vulcanizing agent
(REYNAFIX art.no. 084.9108.--).
This vulcanizing agent will remain elastic and because of this the gasket will also fit perfectly into the corners.

1.2.2 Veranda profiles – general

1.2.2.1 Profile connections
Steps:
a. Correct sawing, punching or drilling.
b. Protection of the saw cuts by:
- deburring (if necessary);
- removing dust and saw-dust on the saw cut and in the profile chamber;
- degreasing (REYNAFINISH art.no. 086.9210.--);
- applying anti-corrosion product (REYNAPROTECTOR art.no. 086.9209.--); drying time: about 1 hour.
c. Special sealings should be made according to the catalogue indications.

1.2.2.2 Drainage and gaskets
According to the catalogue indications

II.2 FITTING

II.2.1 Storage
Unfinished or finished elements should always be stored in a dry, frost-free room.

II.2.2 Fitting in the structural work

The fixing to the structural work is done either directly through the rebate of the profiles with stainless steel spacer screws, or by means of fixing lugs (see Reynaconnect" catalogue)..
- The fixings may not be applied less than 40 mm from the edge of the wall of the structural work.
- The anchoring may in no way influence the bearing power of the adjacent building parts.
- All anchorings, as far as they are not made of aluminium or stainless steel, should be adequately corrosion protected and may not attack the aluminium themselves.

Anchorings should be applied in such a way that they can meet possible expansion. Placing of the window: see specific assembly prescriptions for window and door systems.
Anchorings should be dimensioned in such a way that they can resist the self-weight of accuring loads caused by snow, wind- and load by maintenance, ..., etc.

II.2.3 Fitting of the accessories

The choice of the fixing points, number of locking points, number of hinges, max. vent weight, max. vent sizes, vent profile used etc. depends on the instructions in the system and accessory catalogue. Sliding and moving parts should be provided with neutral grease. When fitting, please check whether all accessories can be operated easily and without getting stuck.

II.3 ROOF COVERING

Roof covering (roof glazing or synthetic flooring) should be made according to the local norms and/or prescriptions.

VERARBEITUNGSVORSCHRIFTEN

I .ALLGEMEIN

Siehe Katalog “1. Allgemeine information (089.C01E.00)

II.VERARBEITUNGSVORSCHRIFTEN CONCEPT ROOF 120

II.1 VERARBEITUNG

Um ein qualitativ hochwertiges Endprodukt zu erstellen, sollen bei der Verarbeitung folgende Punkte berücksichtigt werden:

II.1.1 Spanende Bearbeitungen

Mit spanenden Bearbeitungen sind alle mechanischen Bearbeitungen, wie Sägen, Fräsen, Bohren, Stanzen gemeint.
Bei allen mechanischen Bearbeitungen ist auf den Einsatz geeigneter Sägeblätter, Fräser und Bohrer zu achten, damit die Oberfläche nicht durch Grate oder abplatzende Beschichtung beschädigt wird.
Zur Profilbearbeitung ge ben wir folgende Hinweise:

- Die spanabhebenden Werkzeuge müssen für den Werkstoff geeignet und ausreichend scharf sein.
- Die Maschine muss richtig eingestellt und auf den Werkstoff Aluminium (z.B. Drehzahl) abgestimmt sein.
- Es wird regelmäßige Wartung und Kontrolle des Werkzeugs gemäß den Vorschriften der Maschinenlieferanten ausgeführt.
- Zur Verlängerung der Werkzeugstandzeiten können geeignete Gleitmittel, wie :
  der Fettstift (Art.-Nr. 086.9191.UN);
  das Schneidmittel (Art.-Nr. 086.9175.UN)
  oder die von den Maschinenlieferanten vorgeschriebenen Kühl- und Schneidmittel
- Es die korrekten Spannbacken verwendet werden (siehe Montagezeichnung „*Spannbacken*“).
- Der Auflage- und Ablauftisch soll frei von Spänen und Verunreinigungen sein;
- Die Kühl- und Schneidmittel müssen chemisch neutrale Produkte sein, die die Oberfläche nicht angreifen.

Es empfiehlt sich, Späne abzusaugen, die während der spanenden Bearbeitung entstehen. Alle Sägeschnitte, die eine Verbindung bilden (wie z. B. Eck- und T-Verbindungen) müssen mit Reynaprotector (Art.-Nr. 086.9208.SY + 086.9225.--) geschützt werden. Andere Sägeschnitte (wie z. B. Glasleisten, Klemmleisten, Frässchnitte, Bohr- oder Stanzlöcher) müssen mit Reynastick (Art.-Nr. 086.9600.XX) geschützt werden.

Für die korrekte Funktion, Leistung und Ästhetik des Endprodukts ist es sehr wichtig, dass die Profile in engen Toleranzen gesägt werden. Falls strittig ist, was unter annehmbaren Abweichungen zu verstehen ist, können die Richtlinien von Instanzen wie Aluminium Center Belgium herangezogen werden.

Position/Klemmung der Profile während des Sägens :
Die Position der Profile auf dem Sägetisch beim Sägen ist sehr wichtig und die Grundlage für perfekte Stöße. Beim Einspannen muss die Bewegungsrichtung des Sägeblatts gegenüber dem Profil berücksichtigt werden (siehe die Abbildungen unten). Wir unterschieden primäre (1) und sekundäre (2) Einspannung. Auf die primäre Einspannung wird der stärkste Druck ausgeübt. Ob eine sekundäre Einspannung notwendig ist, hängt von der genauen Form des Profils ab.

Die Klemmblöcke müssen verwendet werden:
- um zu verhindern, dass Spiel an den Profilen die Qualität des Stoßes beeinträchtigt;
- um zu verhindern, dass sich die Profile auf dem Tisch verdrehen.

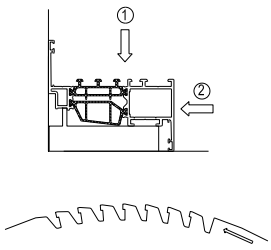

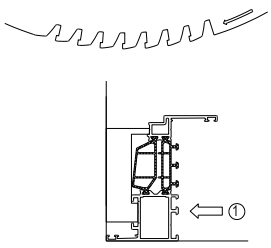

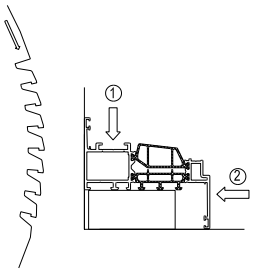

FALSCHE EINSPANNUNG

FALSCH: Die primäre Einspannung drückt jenseits Drehpunkts gegen das Profil, wodurch es sich verdreht.
FOLGE: Schiefer Sägeschnitt: Die Außenseite ist kürzer als die Innenseite.
ERGEBNIS: Nach dem Verbinden der Ecken ist die Gehrung an der Innenseite dicht, aber an der Außenseite ist eine Öffnung sichtbar.

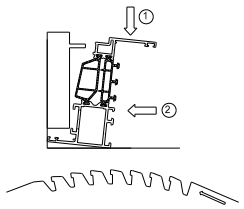

B

II.1.2 Profilverbindungen und deren Verarbeitung

Folgende Verarbeitungsschritte werden unterschieden:
1. Entwässerung und Aussparungen für den Beschläge:
2. T-Verbindungen;
3. Eckverbindungen;
   - Pressen
   - Schrauben.
4. Dichtungen

1.2.1 Dachfenster

1.2.1.1 Eckverbindungen

Verfahrensweise:
a) Zuschneiden, stanzen oder bohren.
b) Schutz der Schnittkanten:
- Entgraten (falls erforderlich).
- Schnittfläche und Profilkammern von Staub und Sägeresten säubern.
- Entfetten der Profile (REYNAFINISH Art.-Nr. 086.9210.--).
- Korrosionsschutzprodukt (REYNAPROTECTOR Art.-Nr. 086.9209.--) aufbringen; Trockenzeit: ca. 1 Stunde.

c) Abdichtung: die Schnittflächen mit einer neutralen Dichtungsmasse versehen.
d) Klebereinsatz: Zweikomponentenkleber (z.B. REYNASEAL DUO Art.-Nr. 084.9080.--) einbringen:
- in die Eckwinkelkammer;
- im Bereich der Glasanschlagwinkel.

e) Verbinden: die Verbindung der Profilstücke kann durch verpressen, versicken, verstiften oder verschrauben der Eckwinkel vorgenommen werden.
f) Ausgetretener Kleber oder Dichtungsmittelreste müssen von den Sichtseiten entfernt werden (REYNAFINISH Art.-Nr. 086.9210.--).

1.2.2 Entwässerung

Verfahrensweise:
a) Stanzen, bohren oder fräsen.
b) Schutz der Schnittkanten:
- Entgraten (falls erforderlich).
- Schnittfläche und Profilkammern von Staub und Sägeresten säubern.
- Entfetten der Profile (REYNAFINISH Art.-Nr. 086.9210.--).
- Korrosionsschutzprodukt (REYNAPROTECTOR Art.-Nr. 086.9209.--) aufbringen; Trockenzeit: ca. 1 Stunde.

Insbesondere ist auf folgendes zu achten:
- Alle sichtbaren Entwässerungsöffnungen müssen mit systemabhängigen Kunststoff-Abdeckkappen versehen werden.
- Alle Rahmenkonstruktionen müssen im Solbankbereich bzw. an den horizontalen T-Profilen mit entsprechenden Ausnehmungen versehen werden.
- Eventuell eingedrungenes Wasser muss problemlos und kontrolliert abgeleitet werden können.
- Es sind entsprechende Dampfdruckausgleichsbohrungen vorzunehmen.

Bei jedem Rahmen sind grundsätzlich zwei Entwässerungsbohrungen vorzunehmen.
Diese sitzen max. 250 mm aus der Ecke. Bei Rahmenbreiten grösser als 500 mm sind mind. 3 Öffnungen vorzusehen bzw. je weiteren 500 mm ist eine zusätzliche Öffnung vorzusehen. Die Mindestoberfläche der Entwässerungsöffnung beträgt 50 mm² pro Öffnung, wobei eine Bohrung von mind. 8 mm Durchmesser oder ein Schlitz von 5 x 15 mm vorzusehen ist. An der Flügel- oder Rahmenoberkante sind Druckausgleichsöffnungen von mind. 5 mm Grösse vorzunehmen. Die Entwässerungsöffnungen sind grundsätzlich am tiefsten Punkt der Profilkontur anzubringen.

1.2.1.3 Dichtungen

Alle angebotenen Dichtungsprofile bestehen aus EPDM mit einer hohen Alterungs und Witterungsbeständigkeit.
Die Verarbeitung der Dichtungen hat sorgfältig und entsprechend den folgenden Hinweisen zu erfolgen:

Verglasungsdichtungen und andere Dichtungen.
1. Die Verglasungsdichtung wird je nach Erfordernis mit einer speziellen Schere (Art.-Nr. 090.0121.UN) gerade oder auf Gehrung zugeschnitten. Je lfdm. Dichtung ist eine Überlänge von 10 mm hinzuzurechnen.
2. Das Einbringen der Dichtung erfolgt in die vorgesehenen Dichtungsaufnahmen. Beim Einbringen der Dichtungen wird der überlange Zuschnitt durch stauchen der Dichtungprofile ausgeglichen. Durch die Anwendung des Silikonssprays (Art.-Nr. 086.9551.--) wird das Einbringen der Dichtungen erleichtert.
3. Die Gehrungs- oder T-Stösse der Dichtungen sollen grundsätzlich mit unserem Vulkanisierkleber (REYNAFIX Art.-Nr. 084.9108.--) verklebt werden.

1.2.2 Wintergartenprofile allgemein

1.2.2.1 Profilverbindungen

Verfahrensweise:
a) Zuschneiden, stanzen oder bohren.
b) Schutz der Schnittkanten:
- Entgraten (falls erforderlich).
- Schnittfläche und Profilkammern von Staub und Sägeresten säubern.
- Entfetten der Profile (REYNAFINISH Art.-Nr. 086.9210.--).
- Korrosionsschutzprodukt (REYNAPROTECTOR Art.-Nr. 086.9209.--) aufbringen; Trockenzeit: ca. 1 Stunde.

c) Sonderdichtungen sollen gemäß den Angaben im Katalog gemacht werden.

1.2.2.2 Entwässerung und Dichtungen

Gemäß den Angaben im Katalog.

II.2 MONTAGE

II.2.1 Lagerung

Die Lagerung nicht verarbeiteter oder verarbeiteter Elemente muss in jedem Fall in einem trockenen, frostfreien Raum erfolgen.

II.2.2 Befestigung am Baukörper

Die Befestigung am Baukörper erfolgt entweder direkt durch den Falz der Profile mit Edelstahl-Abstandsschrauben oder mit Befestigungsankern (siehe Katalog „Reynaconnect“).
- Beim Einsatz von Schrauben und Dübeln ist zu gewährleisten, dass ein Mindestabstand von 40 mm vom Rand des Baukörpers eingehalten wird
- Die Verankerung ist so zu wählen, dass die auf die Fensterkonstruktion einwirkenden Lasten sicher an den Baukörper abgeleitet werden.
- Alle zum Einsatz kommenden Verankerungen sollen aus Aluminium oder Edelstahl bzw. korrosionsgeschützt sein, damit die Aluminiumprofile nicht angegriffen werden.

Die Verankerungen sollen so angebracht werden, dass sie evntuelle Ausdehnungen ausgleichen können. Aufstellung Fenster: siehe spezifische Ausstellungsvorschriften für Fenster- und Türsysteme.
Die Verankerungen sollen so dimensioniert werden, dass sie das Eigengewicht auftretender Belastungen wie Schnee, Wind- und unterhaltungsbelastung, ..., usw. widerstehen können.

II.2.3 Einbau der Beschläge

Die Wahl der Befestigungspunkte, der Anzahl Schließpunkte, der Anzahl Scharniere, des max. Flügelgewichts, der max. Flügelmaße, des verwendeten Flügelprofils etc. muss nach den Richtlinien im System- und Beschlagkatalog erfolgen. Gleitende und bewegliche Teile sind mit einem neutralen Fett zu versehen. Bei der Montage ist zu kontrollieren, ob der Beschlag leichtgängig zu betätigen ist**.**

II.3 DACHDECKUNG

Dachdeckung (Glasbedachtung oder Kunststoffdachdeckung) soll gemaß den lokalen Normen und/oder Vorschriften ausgeführt werden.

C

Reynaers Aluminium

Profielen

Profilés

Profiles

Profile

Art. N°			Art. N°		
004.3306.XX	43E.C.020	D0070224	007.0828.XX	43E.C.003	D0070206
004.3306.XX	43E.C.090	D0027592	007.0828.XX	43E.C.033	D0040803
004.3307.XX	43E.C.020	D0070224	007.0831.XX	43E.C.004	D0070207
004.3307.XX	43E.C.090	D0027592	007.0831.XX	43E.C.035	D0004343
004.3309.XX	43E.C.020	D0070224	007.0832.XX	43E.C.003	D0070206
004.3309.XX	43E.C.090	D0027592	007.0832.XX	43E.C.034	D0027584
004.3310.XX	43E.C.090	D0027592	007.0833.XX	43E.C.004	D0070207
004.3312.XX	43E.C.020	D0070224	007.0833.XX	43E.C.022	D0069277
004.3312.XX	43E.C.090	D0027592	007.0834.XX	43E.C.010	D0070214
004.3328.XX	43E.C.020	D0070224	007.0834.XX	43E.C.060	D0069788
004.3328.XX	43E.C.090	D0027592	007.0835.XX	43E.C.010	D0070214
004.3329.XX	43E.C.090	D0027592	007.0835.XX	43E.C.060	D0069788
004.3333.XX	43E.C.020	D0070224	007.0837.XX	43E.C.004	D0070207
004.3333.XX	43E.C.090	D0027592	007.0837.XX	43E.C.081_01.001	D2001214
007.0552.XX	43E.C.073	D0040934	007.0838.00	43E.C.011	D0070215
007.0562.PA	43E.C.018	D0070222	007.0838.00	43E.C.063	D0069790
007.0562.PA	43E.C.086	D0040964	007.0844.XX	43E.C.006	D0070209
007.0563.PA	43E.C.018	D0070222	007.0844.XX	43E.C.030_01.001	D0100957
007.0563.PA	43E.C.086	D0040964	007.0845.XX	43E.C.015	D0070219
007.0564.PA	43E.C.018	D0070222	007.0845.XX	43E.C.073	D0040934
007.0564.PA	43E.C.086	D0040964	007.0847.XX	43E.C.015	D0070219
007.0568.XX	43E.C.012	D0070216	007.0847.XX	43E.C.075	D0040936
007.0568.XX	43E.C.066	D0040878	007.0848.XX	43E.C.003	D0070206
007.0765.XX	43E.C.014	D0070218	007.0848.XX	43E.C.034	D0027584
007.0765.XX	43E.C.069	D0040923	007.0850.XX	43E.C.011	D0070215
007.0766.XX	43E.C.014	D0070218	007.0850.XX	43E.C.063	D0069790
007.0766.XX	43E.C.069	D0040923	007.0852.XX	43E.C.007_01.001	D0070211
007.0767.01	43E.C.014	D0070218	007.0852.XX	43E.C.052	D0069501
007.0767.01	43E.C.069	D0040923	007.0853.XX	43E.C.007_01.001	D0070211
007.0768.XX	43E.C.014	D0070218	007.0853.XX	43E.C.052	D0069501
007.0768.XX	43E.C.070	D0004361	007.0854.XX	43E.C.062	D0069789
007.0769.XX	43E.C.014	D0070218	007.0861.XX	43E.C.007	D0070210
007.0769.XX	43E.C.070	D0004361	007.0861.XX	43E.C.049	D0040844
007.0770.XX	43E.C.014	D0070218	007.0862.XX	43E.C.005	D0070208
007.0770.XX	43E.C.070	D0004361	007.0862.XX	43E.C.037	D0027588
007.0797.XX	43E.C.001	D0070204	007.0865.XX	43E.C.016	D0070220
007.0797.XX	43E.C.028	D0069703	007.0865.XX	43E.C.077	D0022631
007.0798.XX	43E.C.001	D0070204	007.0866.XX	43E.C.016	D0070220
007.0798.XX	43E.C.026	D0069283	007.0866.XX	43E.C.078	D0022836
007.0799.XX	43E.C.001	D0070204	007.0869.XX	43E.C.007	D0070210
007.0799.XX	43E.C.027	D0070118	007.0869.XX	43E.C.050	D0040849
007.0800.XX	43E.C.001	D0070204	007.0871.XX	43E.C.015	D0070219
007.0800.XX	43E.C.022	D0069277	007.0871.XX	43E.C.071	D0004353
007.0801.XX	43E.C.004	D0070207	007.0872.XX	43E.C.006	D0070209
007.0801.XX	43E.C.035	D0004343	007.0872.XX	43E.C.047	D0022811
007.0802.XX	43E.C.001	D0070204	007.0873.XX	43E.C.007	D0070210
007.0802.XX	43E.C.023	D0069650	007.0873.XX	43E.C.048	D0022816
007.0803.XX	43E.C.001	D0070204	007.0874.XX	43E.C.007	D0070210
007.0803.XX	43E.C.029	D0040793	007.0874.XX	43E.C.048	D0022816
007.0804.01	43E.C.002	D0070205	007.0875.XX	43E.C.006	D0070209
007.0804.01	43E.C.031	D0040796	007.0875.XX	43E.C.046	D0022573
007.0805.01	43E.C.002	D0070205	007.0876.XX	43E.C.005	D0070208
007.0805.01	43E.C.031	D0040796	007.0876.XX	43E.C.038	D0022629
007.0806.01	43E.C.002	D0070205	007.0878.XX	43E.C.005	D0070208
007.0806.01	43E.C.031	D0040796	007.0878.XX	43E.C.041	D0040838
007.0807.01	43E.C.002	D0070205	007.0879.04	43E.C.006	D0070209
007.0807.01	43E.C.031	D0040796	007.0879.04	43E.C.045	D0040836
007.0813.XX	43E.C.001	D0070204	007.0880.XX	43E.C.005	D0070208
007.0813.XX	43E.C.025	D0027583	007.0880.XX	43E.C.039	D0004348
007.0816.XX	43E.C.004	D0070207	007.0881.XX	43E.C.011	D0070215
007.0816.XX	43E.C.035	D0004343	007.0881.XX	43E.C.062	D0069789
007.0818.00	43E.C.002	D0070205	007.0882.XX	43E.C.007	D0070210
007.0818.00	43E.C.029	D0040793	007.0882.XX	43E.C.050	D0040849
007.0819.XX	43E.C.018	D0070222	007.0883.XX	43E.C.007	D0070210
007.0819.XX	43E.C.085	D0004213	007.0883.XX	43E.C.051	D0040850
007.0823.XX	43E.C.059	D0040870	007.0884.00	43E.C.006	D0070209
007.0824.XX	43E.C.010	D0070214	007.0884.00	43E.C.047	D0022811
007.0824.XX	43E.C.058	D0070581	007.0888.XX	43E.C.011	D0070215
007.0827.XX	43E.C.003	D0070206	007.0888.XX	43E.C.061	D0040872
007.0827.XX	43E.C.033	D0040803	007.0896.XX	43E.C.007	D0070210

Art. N°			Art. N°		
007.0896.XX	43E.C.051	D0040850	021.4580.XX	43E.C.006	D0070209
007.0902.00	43E.C.005	D0070208	021.4580.XX	43E.C.044	D0040842
007.0902.00	43E.C.043	D0040839	022.0235.XX	43E.C.017	D0070221
007.0904.XX	43E.C.015	D0070219	022.0235.XX	43E.C.083	D0027591
007.0904.XX	43E.C.072	D0040926	030.0138.00	43E.C.006	D0070209
007.0905.XX	43E.C.015	D0070219	030.0138.00	43E.C.045	D0040836
007.0905.XX	43E.C.072	D0040926	030.1158.XX	43E.C.015	D0070219
007.0907.00	43E.C.006	D0070209	030.1158.XX	43E.C.052_01.004	D2001549
007.0907.00	43E.C.081_01.002	D2001215	030.1159.XX	43E.C.015	D0070219
007.0916.XX	43E.C.005	D0070208	030.1159.XX	43E.C.052_01.004	D2001549
007.0916.XX	43E.C.048_01.001	D2001588	030.1160.XX	43E.C.015	D0070219
007.0917.XX	43E.C.005	D0070208	030.1160.XX	43E.C.052_01.004	D2001549
007.0917.XX	43E.C.048_01.001	D2001588	034.0010.XX	43E.C.012	D0070216
007.0918.XX	43E.C.005	D0070208	034.0010.XX	43E.C.064	D0069792
007.0918.XX	43E.C.048_01.002	D2001589	034.0035.XX	43E.C.012	D0070216
007.0919.XX	43E.C.005	D0070208	034.0035.XX	43E.C.064	D0069792
007.0919.XX	43E.C.048_01.002	D2001589	034.0070.04	43E.C.013	D0070217
007.0933.00	43E.C.004	D0070207	034.0070.04	43E.C.067	D0069504
007.0933.00	43E.C.036_01.001	D2001216	034.0071.04	43E.C.013	D0070217
007.0950.XX	43E.C.014	D0070218	034.0071.04	43E.C.067	D0069504
007.0950.XX	43E.C.052_01.003	D2001548	034.0072.04	43E.C.013	D0070217
007.0951.XX	43E.C.014	D0070218	034.0072.04	43E.C.067	D0069504
007.0951.XX	43E.C.052_01.002	D2001547	034.0073.04	43E.C.013	D0070217
007.0952.XX	43E.C.014	D0070218	034.0073.04	43E.C.067	D0069504
007.0952.XX	43E.C.052_01.002	D2001547	034.0074.04	43E.C.013	D0070217
007.0953.XX	43E.C.014	D0070218	034.0074.04	43E.C.067	D0069504
007.0953.XX	43E.C.052_01.001	D2001546	034.0075.04	43E.C.013	D0070217
007.0954.XX	43E.C.014	D0070218	034.0075.04	43E.C.067	D0069504
007.0954.XX	43E.C.052_01.001	D2001546	034.0076.04	43E.C.013	D0070217
007.0955.XX	43E.C.015	D0070219	034.0076.04	43E.C.067	D0069504
007.0955.XX	43E.C.052_01.004	D2001549	034.0514.XX	43E.C.019	D0070223
007.0994.XX	43E.C.007_01.001	D0070211	034.0514.XX	43E.C.089	D0040975
007.1550.XX	43E.C.015	D0070219	034.0517.XX	43E.C.019	D0070223
007.1550.XX	43E.C.071_02.001	D3002161	034.0517.XX	43E.C.089	D0040975
007.1571.XX	43E.C.018	D0070222	034.0615.XX	43E.C.020	D0070224
007.1571.XX	43E.C.085	D0004213	034.0615.XX	43E.C.089	D0040975
007.1808.XX	43E.C.001	D0070204	034.0616.XX	43E.C.020	D0070224
007.1808.XX	43E.C.030_01.001	D0100957	034.0616.XX	43E.C.089	D0040975
007.1820.XX	43E.C.010	D0070214	034.0617.XX	43E.C.019	D0070223
007.1820.XX	43E.C.059	D0040870	034.0617.XX	43E.C.089	D0040975
007.1821.XX	43E.C.010	D0070214	034.0618.XX	43E.C.019	D0070223
007.1821.XX	43E.C.059	D0040870	034.0618.XX	43E.C.089	D0040975
007.1822.XX	43E.C.010	D0070214	034.0619.XX	43E.C.020	D0070224
007.1822.XX	43E.C.058	D0070581	034.0619.XX	43E.C.089	D0040975
007.1851.XX	43E.C.011	D0070215	034.0668.XX	43E.C.013	D0070217
007.1851.XX	43E.C.063	D0069790	034.0668.XX	43E.C.066	D0040878
007.1870.XX	43E.C.015	D0070219	034.0690.00	43E.C.014	D0070218
007.1870.XX	43E.C.071	D0004353	034.0690.00	43E.C.068	D0040879
007.1885.XX	43E.C.007_01.001	D0070211	034.1011.00	43E.C.012	D0070216
007.1885.XX	43E.C.053	D0070580	034.1011.00	43E.C.065	D0069791
007.1886.XX	43E.C.007_01.001	D0070211	034.1013.00	43E.C.012	D0070216
007.1886.XX	43E.C.053	D0070580	034.1013.00	43E.C.065	D0069791
007.1906.XX	43E.C.015	D0070219	034.1036.00	43E.C.012	D0070216
007.1906.XX	43E.C.072	D0040926	034.1036.00	43E.C.065	D0069791
017.0529.XX	43E.C.019	D0070223	034.1038.00	43E.C.012	D0070216
017.0593.XX	43E.C.009	D0070213	034.1038.00	43E.C.065	D0069791
017.0593.XX	43E.C.057	D0040867	034.1060.XX	43E.C.004	D0070207
017.0595.XX	43E.C.009	D0070213	034.1060.XX	43E.C.035	D0004343
017.0595.XX	43E.C.057	D0040867	043.1010.XX	43E.C.015	D0070219
017.0596.XX	43E.C.009	D0070213	043.1010.XX	43E.C.074	D0069506
017.0596.XX	43E.C.057	D0040867	043.1015.XX	43E.C.015	D0070219
017.0597.XX	43E.C.009	D0070213	043.1015.XX	43E.C.075	D0040936
017.0597.XX	43E.C.057	D0040867	064.0525.00	43E.C.064	D0069792
017.0598.XX	43E.C.057	D0040867	0A1.2033.XX	43E.C.019	D0070223
021.4533.XX	43E.C.018	D0070222	0A1.2033.XX	43E.C.088	D0069324
021.4533.XX	43E.C.085	D0004213	0B0.5401.XX	43E.C.018	D0070222
021.4534.XX	43E.C.018	D0070222	0B0.5401.XX	43E.C.086	D0040964
021.4534.XX	43E.C.085	D0004213	0I7.0880.XX	43E.C.006	D0070209
021.4568.17	43E.C.004	D0070207	0I7.0880.XX	43E.C.045	D0040836
021.4568.17	43E.C.035	D0004343	0L3.0302.XX	43E.C.007_01.001	D0070211

Art. N°			Art. N°		
0L3.0302.XX	43E.C.053	D0070580			
0L4.0202.XX	43E.C.019	D0070223			
0L4.0202.XX	43E.C.088	D0069324			
0L5.0253.XX	43E.C.019	D0070223			
0L5.0253.XX	43E.C.088	D0069324			
0M0.4008.XX	43E.C.012	D0070216			
0M0.4008.XX	43E.C.066	D0040878			
0M0.6003.XX	43E.C.012	D0070216			
0M0.6003.XX	43E.C.066	D0040878			
0S0.8015.–	43E.C.021	D0070333			
0S0.8015.–	43E.C.091	D0022628			
0S7.0503.–	43E.C.021	D0070333			
0S7.0503.–	43E.C.091	D0022628			
0S8.0403.–	43E.C.021	D0070333			
0S8.0403.–	43E.C.091	D0022628			
0S8.0405.–	43E.C.091	D0022628			

DRAGER
CHEVRON
RAFTER
DACHSPARREN

		A dm²/m	P dm²/m	Lm	Ix cm⁴	Iy cm⁴
007.0800.XX	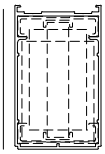	33.98	26.0	5.00 7.00 4.00	83.126	38.778
007.0802.XX	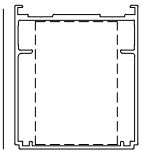	27.98	19.1	7.00	29.659	24.856
007.0813.XX	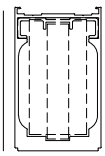	33.98	26.0	7.00 5.00	151.075	65.393
007.0798.XX	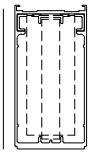	37.98	30.0	7.00 5.00 4.00	186.767	50.143
007.0799.XX	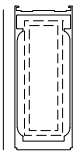	44.05	36.0	5.00	499.551	87.265
007.0797.XX	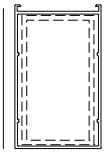	33.66	26.0	7.00 5.00	77.689	36.837
007.0803.XX	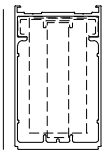	33.98	26.0	5.00 7.00 4.00	119.471	44.044

DRAGER
CHEVRON
RAFTER
DACHSPARREN

		A dm²/m	P dm²/m	Lm	Ix cm⁴	Iy cm⁴
007.1808.XX	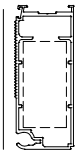	35.55	14.0	7.00	75.933	16.949

		A dm²/m	P dm²/m	Lm	Ix cm⁴	Iy cm⁴

C

D0070204

HULPPROFIEL
PROFILE DE RACCORDEMENT
ADDITIONAL PROFILE
ZUSATZPROFIL

		A dm²/m	P dm²/m	Lm	Ix cm⁴	Iy cm⁴
007.0818.00		-	-	7.00	0.337	6.808
007.0804.01	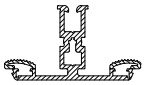	0.01	-	7.00 5.00	-	-
007.0805.01	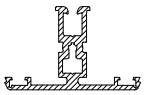	0.01	-	7.00	-	-
007.0806.01	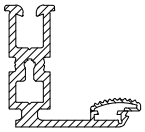	19.98	-	7.00 5.00	2.664	2.554
007.0807.01	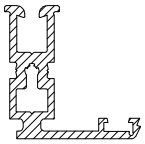	19.72	-	7.00	2.570	1.460

		A dm²/m	P dm²/m	Lm	Ix cm⁴	Iy cm⁴

C

D0070205

ZIJKANT DRAGER
PROFILE DE RIVE
EDGE SECTION
SEITENSPARREN

		A dm²/m	P dm²/m	Lm	Ix cm⁴	Iy cm⁴
007.0827.XX	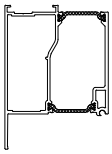	31.57	16.9	7.00	48.829	29.852
007.0828.XX		12.23	0.7	7.00 5.00	0.069	1.439
007.0832.XX	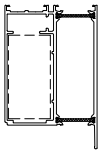	41.97	24.7	7.00	91.260	76.243
007.0848.XX	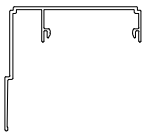	38.96	16.8	7.00	11.395	22.237

		A dm²/m	P dm²/m	Lm	Ix cm⁴	Iy cm⁴

C

D0070206

AFDEKPROFIEL
PROFILE DE RECOUVREMENT
COVERING PROFILE
ABDECKPROFIL

	A dm²/m	P dm²/m	Lm	Ix cm⁴	Iy cm⁴
007.0801.XX	21.31	9.6	7.00 5.00	0.582	6.675
007.0837.XX	19.17	6.1	7.00	0.430	3.001
007.0933.00	-	-	7.00	2.250	2.551
007.0816.XX	19.14	8.8	7.00	0.538	5.093
007.0831.XX	31.92	15.1	7.00	11.643	10.930
034.1060.XX	16.75	6.6	7.00 5.00	0.118	4.231
007.0833.XX	29.95	14.0	7.00	4.657	12.152
021.4568.17	9.28	-	7.00	0.306	0.097

	A dm²/m	P dm²/m	Lm	Ix cm⁴	Iy cm⁴

C

D0070207

GOOT
GOUTTIERE
GUTTER
RINNENPROFIL

		A dm²/m	P dm²/m	Lm	Ix cm⁴	Iy cm⁴
007.0862.XX	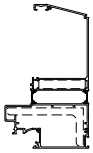	107.63	33.3	7.00	837.806	416.870
007.0876.XX	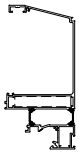	90.75	27.3	7.00 5.00	456.212	138.217
007.0878.XX	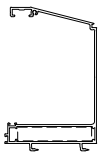	76.30	23.8	7.00 5.00	337.729	118.624
007.0880.XX	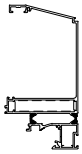	90.73	27.3	7.00 5.00 4.00	418.353	138.219
007.0902.00		-	-	7.00	88.214	25.687

VERHOGING GOOT
PROFILE REHAUSSE DE GOUTTIERE
RAISING PROFILE GUTTER SECTION
RINNENVERBREITERUNG

		A dm²/m	P dm²/m	Lm	Ix cm⁴	Iy cm⁴
007.0916.XX		48.75	21.6	7.00	1.820	153.400
007.0917.XX		41.23	17.3	7.00	1.353	90.040
007.0918.XX		61.77	22.6	7.00	1.734	376.989
007.0919.XX		43.44	17.6	7.00	0.267	151.275

		A dm²/m	P dm²/m	Lm	Ix cm⁴	Iy cm⁴

C

D0070208

GOOT
GOUTTIERE
GUTTER
RINNENPROFIL

	A dm²/m	P dm²/m	Lm	Ix cm⁴	Iy cm⁴
021.4580.XX	65.00	29.0	7.00	198.365	63.606
007.0872.XX	87.29	-	7.00	987.897	42.225
007.0884.00	-	-	7.00	489.943	11.232

KOPPELPROFIEL
PROFILE DE RACCORDEMENT
CONNECTION PROFILE
KUPPLUNGSPROFIL

	A dm²/m	P dm²/m	Lm	Ix cm⁴	Iy cm⁴
007.0907.00	-	-	7.00	37.327	0.231
007.0844.XX	6.49	0.7	7.00	0.086	0.711

KOPPELPROFIEL
PROFILE DE RACCORDEMENT
CONNECTION PROFILE
KUPPLUNGSPROFIL

	A dm²/m	P dm²/m	Lm	Ix cm⁴	Iy cm⁴
030.0138.00	-	-	7.00	-	-
0I7.0880.XX	32.38	3.6	7.00 5.00 4.00	7.394	18.360
007.0879.04	0.01	-	7.00	-	-

GOOT INTEGRATIE ROLLUIK
GOUTTIERE INTEGRATION VOLET ROULANT
GUTTER PROFILE INTEGRATION ROLLER SHUTTER
RINNENPROFIL INTEGRATION ROLLADEN

	A dm²/m	P dm²/m	Lm	Ix cm⁴	Iy cm⁴
007.0875.XX	67.18	37.3	7.00	76.048	834.594

D0070209

AFDEKPROFIEL ROLLUIK
PROFILE DE RECOUVREMENT VOLET ROULANT
COVERING PROFILE ROLLER SHUTTER
ABDECKPROFIL ROLLADEN

		A dm²/m	P dm²/m	Lm	Ix cm⁴	Iy cm⁴
007.0873.XX		44.49	14.7	7.00	1.303	92.356
007.0874.XX	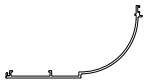	53.57	23.9	7.00	212.643	54.444

GORDIJNRAIL
RAIL A RIDEAU
CURTAIN RAIL
GARDINENSCHIENE

		A dm²/m	P dm²/m	Lm	Ix cm⁴	Iy cm⁴
007.0861.XX	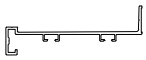	42.86	30.1	7.00	2.292	78.029

VERHOGING GOOT
PROFILE REHAUSSE DE GOUTTIERE
RAISING PROFILE GUTTER SECTION
RINNENVERBREITERUNG

		A dm²/m	P dm²/m	Lm	Ix cm⁴	Iy cm⁴
007.0882.XX		31.15	10.7	5.00 7.00	2.425	15.486
007.0883.XX		42.19	16.4	5.00 7.00	13.167	56.051
007.0869.XX	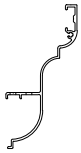	43.86	17.1	5.00 7.00	13.992	53.163
007.0896.XX		40.58	15.2	5.00 7.00	3.081	56.140

C

D0070210

PROFIEL LICHTSTRAAT
PROFILE VERRIERE
SKYLIGHT PROFILE
PROFIL LICHTKUPPEL

		A dm²/m	P dm²/m	Lm	Ix cm⁴	Iy cm⁴
007.0852.XX	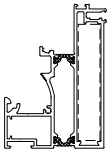	46.49	12.2	7.00 5.00	32.357	86.571
007.0853.XX	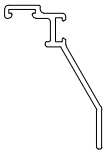	14.18	3.5	7.00	0.664	1.640

HULPPROFIEL GLASHOUDER
PROFILE RACCORD. SUPPORT DE VITRAGE
ADDITIONAL PROFILE GLAZING RAIL
ZUSATZPROFIL GLASHALTEPROFIL

		A dm²/m	P dm²/m	Lm	Ix cm⁴	Iy cm⁴
007.1885.XX	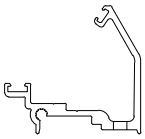	26.94	5.3	7.00	7.307	5.057
007.1886.XX	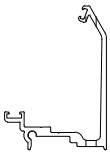	31.40	7.7	7.00	9.079	16.544
007.0994.XX	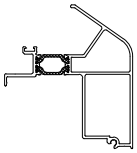	41.09	12.4	7.00	32.045	46.204
0L3.0302.XX	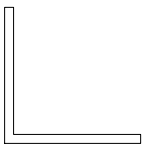	12.00	6.0	6.00	-	-

		A dm²/m	P dm²/m	Lm	Ix cm⁴	Iy cm⁴

C

D0070211

KONDENSATIEPROFIEL
OBTURATEUR DE PLAQUE
CONDENSATION PROFILE
ABSCHLUSSPROFIL

		A dm²/m	P dm²/m	Lm	Ix cm⁴	Iy cm⁴
017.0593.XX	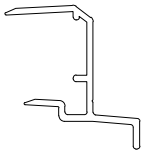	12.72	7.5	6.30	0.493	0.226
017.0595.XX	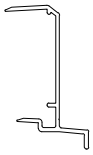	15.92	9.1	6.30	1.829	0.230
017.0596.XX	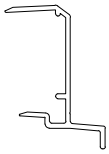	14.51	8.4	6.30	1.121	0.228
017.0597.XX	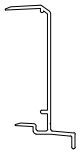	17.51	10.0	6.30	2.904	0.232

		A dm²/m	P dm²/m	Lm	Ix cm⁴	Iy cm⁴

C

D0070213

MUURPROFIEL
RACCORD MURAL
WALL SECTION
MAUERPROFIL

		A dm²/m	P dm²/m	Lm	Ix cm⁴	Iy cm⁴
007.0824.XX		48,16	4,9	7,00 5,00 4,00	106,547	6,372
007.1822.XX		51,81	6,8	7,00 5,00 4,00	152,165	11,522
007.1820.XX	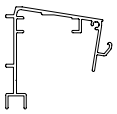	45,08	6,3	7,00 5,00 4,00	14,240	21,391
007.1821.XX	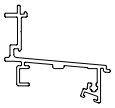	31,36	12,0	7,00	4,193	9,518

AFSTANDSHOUDER BEGLAZING
REDUCTEUR DE FEUILLURE VITRAGE
FILLISTER REDUCER PART GLAZING
GLASFALZVERKLEINUNGSPROFIL

		A dm²/m	P dm²/m	Lm	Ix cm⁴	Iy cm⁴
007.0834.XX	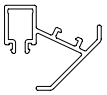	19,51	3,2	7,00	0,959	0,548
007.0835.XX	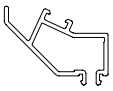	18,05	3,3	7,00	0,901	0,407

		A dm²/m	P dm²/m	Lm	Ix cm⁴	Iy cm⁴

C

D0070214

AFDEKPROFIEL
PROFILE DE RECOUVREMENT
COVERING PROFILE
ABDECKPROFIL

		A dm²/m	P dm²/m	Lm	Ix cm⁴	Iy cm⁴
007.0888.XX		9.22	4.2	7.00	0.096	0.422

STEUNPROFIEL
PROFILE DE SUPPORT
RAFTER HOLDER
SPARRENAUFLAGEPROFIL

		A dm²/m	P dm²/m	Lm	Ix cm⁴	Iy cm⁴
007.0881.XX	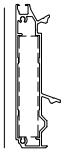	35.22	11.7	5.00 7.00	76.592	5.417

KLIPSPROFIEL
CLIP
CLIP PROFILE
ABDECKPROFIL

		A dm²/m	P dm²/m	Lm	Ix cm⁴	Iy cm⁴
007.0838.00	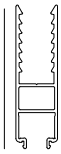	-	-	7.00	6.183	1.163
007.0850.XX	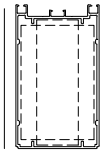	52.74	35.6	7.00 4.00	242.557	106.180
007.1851.XX		49.21	21.2	7.00 4.00	1.656	142.320

		A dm²/m	P dm²/m	Lm	Ix cm⁴	Iy cm⁴

C

D0070215

KLEMPROFIEL NOK
SERREUR FAITIERE
PRESSURE PLATE HIP
GLASHALTEPROFIL FIRST

	A dm²/m	P dm²/m	Lm	Ix cm⁴	Iy cm⁴
034.1011.00	-	-	7.00	0.468	28.779
034.1013.00	-	-	7.00	0.893	32.207
034.1036.00	-	-	7.00	0.383	5.416
034.1038.00	-	-	7.00	0.219	4.502
034.0010.XX	30.92	15.7	7.00	2.255	30.850
034.0035.XX	16.16	7.9	7.00	0.552	3.468

DWARSPROFIEL
TRAVERSE
TRANSOM
RIEGELPROFIL

	A dm²/m	P dm²/m	Lm	Ix cm⁴	Iy cm⁴
007.0568.XX	25.53	7.1	7.00	0.936	5.931
0M0.6003.XX	12.60	6.6	6.00	0.014	5.400

RECHTHOEKIGE STAAF
BARRE RECTANGULAIRE
RECTANGULAR BAR
FLACHPROFIL

	A dm²/m	P dm²/m	Lm	Ix cm⁴	Iy cm⁴
0M0.4008.XX	9.60	9.6	6.00	0.171	4.267

C

D0070216

ISOLATOR 12.2MM
ISOLATEUR
INSULATOR
ISOLATOR

		A dm²/m	P dm²/m	Lm	Ix cm⁴	Iy cm⁴
034.0070.04	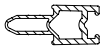	-	-	7,00		
034.0071.04	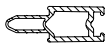	-	-	7,00		
034.0072.04	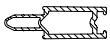	-	-	7,00		
034.0073.04	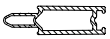	-	-	7,00		
034.0074.04	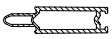	-	-	7,00		
034.0075.04	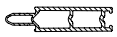	-	-	7,00		
034.0076.04	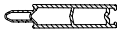	-	-	7,00		

DWARSPROFIEL DAKBEGLAZING
TRAVERSE COUVERTURE EN VERRE
TRANSOM ROOF GLAZING
RIEGELPROFIL GLASBEDACHUNG

		A dm²/m	P dm²/m	Lm	Ix cm⁴	Iy cm⁴
034.0668.XX	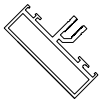	29,17	10,0	7,00	3,904	13,482

C

D0070217

GLASSTEUN
SUPPORT CALE DE VITRAGE
GLASS SUPPORT
GLASAUFLAGEPROFIL

	A dm²/m	P dm²/m	Lm	Ix cm⁴	Iy cm⁴
034.0690.00	-	-	6,00		

BUITENKADER DAKRAAM
DORMANT TABATIERE
OUTER FRAME ATTIC WINDOW
BLENDRAHMEN DACHFENSTER

	A dm²/m	P dm²/m	Lm	Ix cm⁴	Iy cm⁴
007.0765.XX	40,78	16,4	7,00 5,00	25,465	32,272
007.0766.XX	22,47	6,6	7,00 5,00	0,132	13,188
007.0767.01	-	-	7,00	-	-
007.0768.XX	27,56	5,5	7,00 5,00	9,747	10,227
007.0769.XX	18,82	9,6	7,00 5,00	2,827	4,266
007.0770.XX	20,82	10,6	7,00 5,00	5,429	4,647

HOEKPROFIEL
PROFILE D'ANGLE
CORNER PROFILE
ECKPROFIL

	A dm²/m	P dm²/m	Lm	Ix cm⁴	Iy cm⁴
007.0951.XX	28,19	10,4	6,00	7,528	5,986
007.0952.XX	21,81	6,4	6,00	3,704	3,497

AFDEKPROFIEL
PROFILE DE RECOUVREMENT
COVERING PROFILE
ABDECKPROFIL

	A dm²/m	P dm²/m	Lm	Ix cm⁴	Iy cm⁴
007.0953.XX	35,99	9,1	6,00	5,170	11,286
007.0954.XX	30,95	7,8	6,00	5,448	11,038

AFWERKINGSPROFIEL
PROFILE DE FINITION
FINISHING PROFILE
AUSFUEHRUNGSPROFIL

	A dm²/m	P dm²/m	Lm	Ix cm⁴	Iy cm⁴
007.0950.XX	21,05	5,3	7,00	1,331	1,530

C

D0070218

GLASLAT
PARCLOSE
GLAZING BEAD
GLASLEISTE

	A dm²/m	P dm²/m	Lm	Ix cm⁴	Iy cm⁴
007.1906.XX	25.89	4.6	5.00 3.00	4.986	2.173

MIDDENSTEUN
SUPPORT CENTRALE
CENTRAL SUPPORT
MITTELSTUETZE

	A dm²/m	P dm²/m	Lm	Ix cm⁴	Iy cm⁴
007.0871.XX	47.91	17.1	5.00 3.00	30.223	129.311
007.0904.XX	47.85	22.1	7.00	140.251	169.502
007.0905.XX	53.43	12.6	5.00 4.00 3.00	26.612	96.386

HULPPROFIEL
PROFILE DE RACCORDEMENT
ADDITIONAL PROFILE
ZUSATZPROFIL

	A dm²/m	P dm²/m	Lm	Ix cm⁴	Iy cm⁴
007.0955.XX	15.17	3.3	6.00	0.178	3.123

BEKLEDINGSPROFIEL
PLANCHETTE
COVER PROFILE
PANEEL

	A dm²/m	P dm²/m	Lm	Ix cm⁴	Iy cm⁴
030.1158.XX	29.81	10.5	6.50	0.251	28.527
030.1159.XX	34.81	13.0	6.50	0.266	49.710

	A dm²/m	P dm²/m	Lm	Ix cm⁴	Iy cm⁴
030.1160.XX	39.81	15.5	6.50	0.278	79.505

AFDEKPROFIEL
PROFILE DE RECOUVREMENT
COVERING PROFILE
ABDECKPROFIL

	A dm²/m	P dm²/m	Lm	Ix cm⁴	Iy cm⁴
007.0845.XX	71.95	33.4	5.00 4.00 3.00	106.879	155.322
007.0847.XX	70.24	32.4	5.00 3.00	102.559	147.804

KLIPSPROFIEL
CLIP
CLIP PROFILE
ABDECKPROFIL

	A dm²/m	P dm²/m	Lm	Ix cm⁴	Iy cm⁴
043.1010.XX	23.87	9.5	6.00	0.143	19.070
043.1015.XX	46.69	20.4	6.00	12.570	72.420

HOEKPROFIEL
PROFILE D'ANGLE
CORNER PROFILE
ECKPROFIL

	A dm²/m	P dm²/m	Lm	Ix cm⁴	Iy cm⁴
007.1870.XX	50.62	17.1	5.00 3.00	23.861	151.247
007.1550.XX	51.56	16.5	5.00 3.00	25.226	151.933

D0070219

HOEKPROFIEL VARIABEL
PROFILE D'ANGLE VARIABLE
VARIABLE CORNER PROFILE
VARIABELES ECKPROFIL

		A dm²/m	P dm²/m	Lm	Ix cm⁴	Iy cm⁴
007.0865.XX	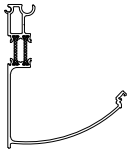	52.39	17.8	7.00	65.978	53.178
007.0866.XX	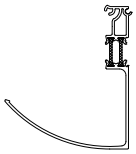	52.48	20.0	7.00	73.806	50.795

		A dm²/m	P dm²/m	Lm	Ix cm⁴	Iy cm⁴

C

D0070220

AFDEKPROFIEL ROND
PROFILE DE RECOUVREMENT ROND
COVERING PROFILE CIRCULAR
ABDECKPROFIL RUND

		A dm²/m	P dm²/m	Lm	Ix cm⁴	Iy cm⁴
022.0235.XX	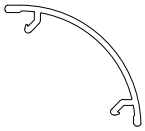	10.42	4.1	6.00	0.470	0.389

		A dm²/m	P dm²/m	Lm	Ix cm⁴	Iy cm⁴

C

D0070221

KLEMPROFIEL
SERREUR
PRESSURE PLATE
GLASHALTEPROFIL

		A dm²/m	P dm²/m	Lm	Ix cm⁴	Iy cm⁴
021.4533.XX	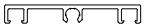	20.10	7.6	7.00	0.082	5.720
021.4534.XX		24.01	7.6	7.00	0.212	5.676
007.0819.XX		20.99	8.0	7.00	0.110	6.924
007.1571.XX	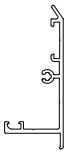	28.27	13.4	7.00	11.074	1.719
007.0562.PA		15.43	7.9	7.00	-	-
007.0563.PA		27.43	13.9	7.00	-	-
007.0564.PA		39.43	19.9	7.00	-	-
0B0.5401.XX	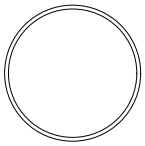	16.97	17.0	6.00	8.530	8.530

		A dm²/m	P dm²/m	Lm	Ix cm⁴	Iy cm⁴

C

D0070222

L-PROFIEL
PROFILE-L
L-PROFILE
WINKELPROFIL

		A dm²/m	P dm²/m	Lm	Ix cm⁴	Iy cm⁴
0L4.0202.XX	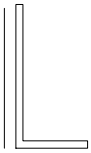	12.00	6.0	6.00	1.964	0.348
0L5.0253.XX	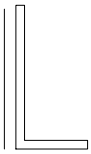	15.00	7.5	6.00	5.661	0.994
0A1.2033.XX		30.00	30.0	6.00	135.691	13.867

AFSTANDSHOUDER BEGLAZING
REDUCTEUR DE FEUILLURE VITRAGE
FILLISTER REDUCER PART GLAZING
GLASFALZVERKLEINERUNGSPROFIL

		A dm²/m	P dm²/m	Lm	Ix cm⁴	Iy cm⁴
034.0517.XX	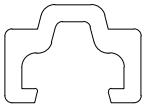	4.36	0.8	7.00	-	-
034.0617.XX	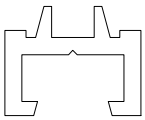	5.28	1.2	7.00	-	-
034.0514.XX	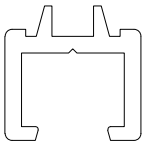	6.06	0.2	7.00	-	-
034.0618.XX	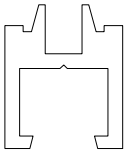	6.88	2.0	7.00	-	-
017.0529.XX	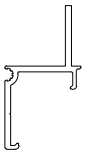	16.70	0.6	7.00	1.249	1.987

C

D0070223

AFSTANDSHOUDER BEGLAZING 16MM
REDUCTEUR DE FEUILLURE VITRAGE
FILLISTER REDUCER PART GLAZING
GLASFALZVERKLEINUNGSPROFIL

		A dm²/m	P dm²/m	Lm	Ix cm⁴	Iy cm⁴
034.0615.XX		10,45	3,3	7,00	0,167	0,080
034.0619.XX		11,25	3,7	7,00	0,228	0,088
034.0616.XX	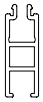	12,23	4,9	7,00	0,488	0,118

GLASLAT 2MM
PARCLOSE
GLAZING BEAD
GLASLEISTE

		A dm²/m	P dm²/m	Lm	Ix cm⁴	Iy cm⁴
004.3328.XX		8,85	2,4	6,00	0,261	0,382
004.3307.XX		10,11	2,6	6,00	0,259	0,443
004.3306.XX		12,90	3,4	6,00	0,265	0,685
004.3312.XX		15,14	3,4	6,00	0,316	0,685
004.3309.XX		15,13	3,7	6,00	0,389	0,684
004.3333.XX		15,36	4,1	6,00	0,515	0,676

		A dm²/m	P dm²/m	Lm	Ix cm⁴	Iy cm⁴

C

D0070224

STALEN PROFIEL 80x15MM
PROFILE EN ACIER
STEEL PROFILE
STAHLPROFIL

		A dm²/m	P dm²/m	Lm	Ix cm⁴	Iy cm⁴
0S0.8015.--		-	-	6,00	64,000	2,250
0S7.0503.--	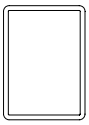	-	-	6,00	44,050	26,100
0S8.0403.--	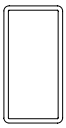	-	-	6,00	52,250	17,560
0S8.0405.--	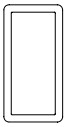	-	-	6,00	75,110	24,590

		A dm²/m	P dm²/m	Lm	Ix cm⁴	Iy cm⁴

C

D0070333

CR 120

DRAGER
CHEVRON
RAFTER
GRATSPARREN

	A dm²/m	P dm²/m	Lm	Ix cm⁴	Wx cm³	ax mm	Iy cm⁴	Wy cm³	ay mm
007.0800.XX	33.98	26.0	5.00/7.00/4.00	83.126	15.873	52.37	38.778	12.926	30.00
007.0833.XX	29.95	14.0	7.00	4.657	1.671	27.86	12.152	4.340	28.00

Y X X 0 Y

007.0800.XX

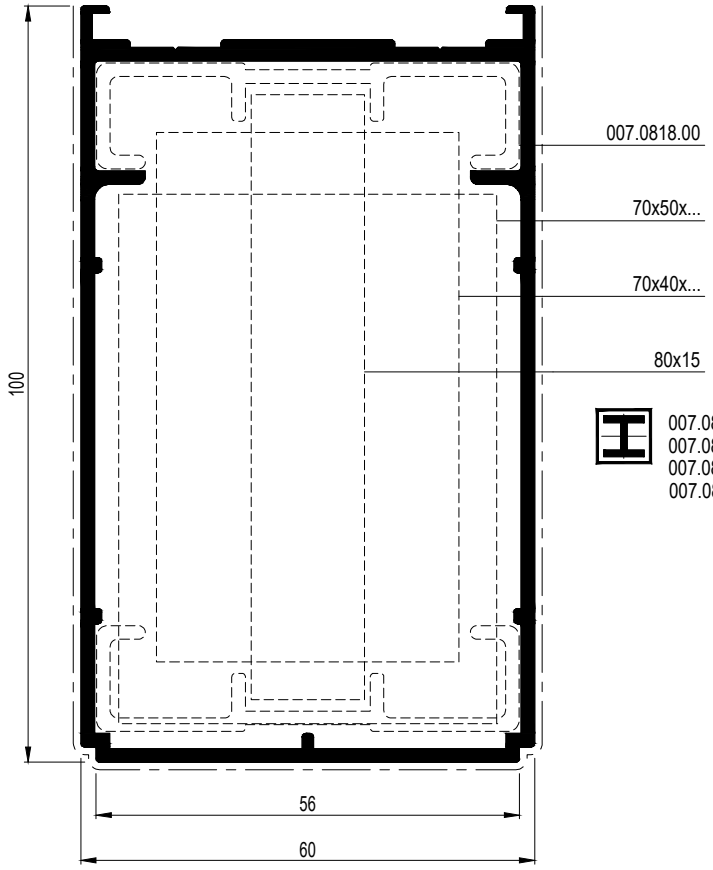

007.0833.XX

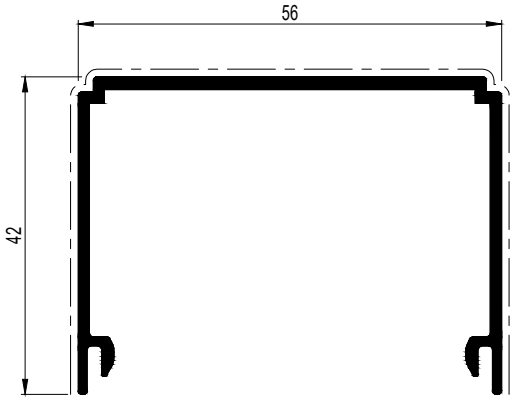

007.0800XX + 2x 007.0818.00 + St 80x15 (0S0.8015.--) : Ix = 275.8 cm ⁴
007.0800XX+ 2x 007.0818.00 + St 70x40x3 : Ix = 195.7 cm ⁴
007.0800XX+ 2x 007.0818.00 + St 70x40x4 : Ix = 221.7 cm ⁴
007.0800XX + St 70x50x3 (0S7.0503.--) : Ix = 215.3 cm ⁴

007.0800.XX	0S0.8015.-- 2 x 007.0818.00	Ix = 275.8 cm ^{4}
007.0800.XX	St/fer 70x40x3 2 x 007.0818.00	Ix = 195.7 cm ^{4}
007.0800.XX	St/fer 70x40x4 2 x 007.0818.00	Ix = 221.7 cm ^{4}
007.0800.XX	0S7.0503.--	Ix = 215.3 cm ^{4}

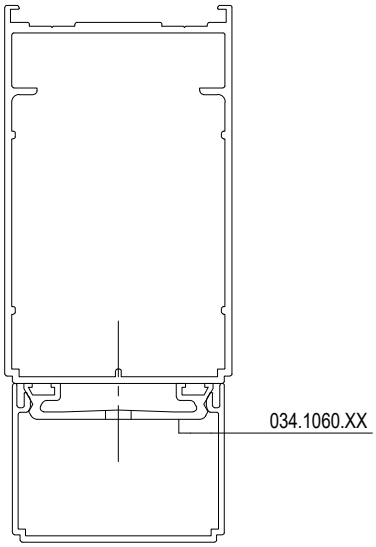

C

D0069277

	A dm²/m	P dm²/m	Lm	Ix cm⁴	Wx cm³	ax mm	Iy cm⁴	Wy cm³	ay mm
007.0802.XX	27.98	20.0	7.00	32.169	8.647	37.20	27.092	9.031	30.00

007.0802.XX

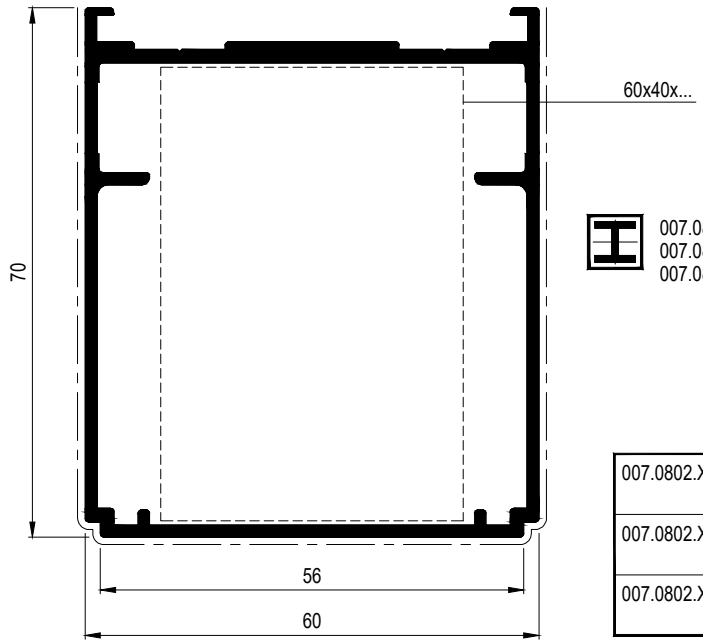

007.0802XX St 60x40x2 : Ix = 87.4 cm ⁴
007.0802XX St 60x40x3 : Ix = 108.3 cm ⁴
007.0802XX St 60x40x4 : Ix = 125.3 cm ⁴

007.0802.XX	St/fer 60x40x2	Ix = 87.4 cm^4
007.0802.XX	St/fer 60x40x3	Ix =108.3 cm^4
007.0802.XX	St/fer 60x40x4	Ix = 125.3 cm^4

C

D0069650

	A dm²/m	P dm²/m	Lm	Ix cm⁴	Wx cm³	ax mm	Iy cm⁴	Wy cm³	ay mm
007.0813.XX	33,98	26,0	7,00/5,00	151,075	23,011	34,35	65,393	21,798	30,00

007.0813.XX

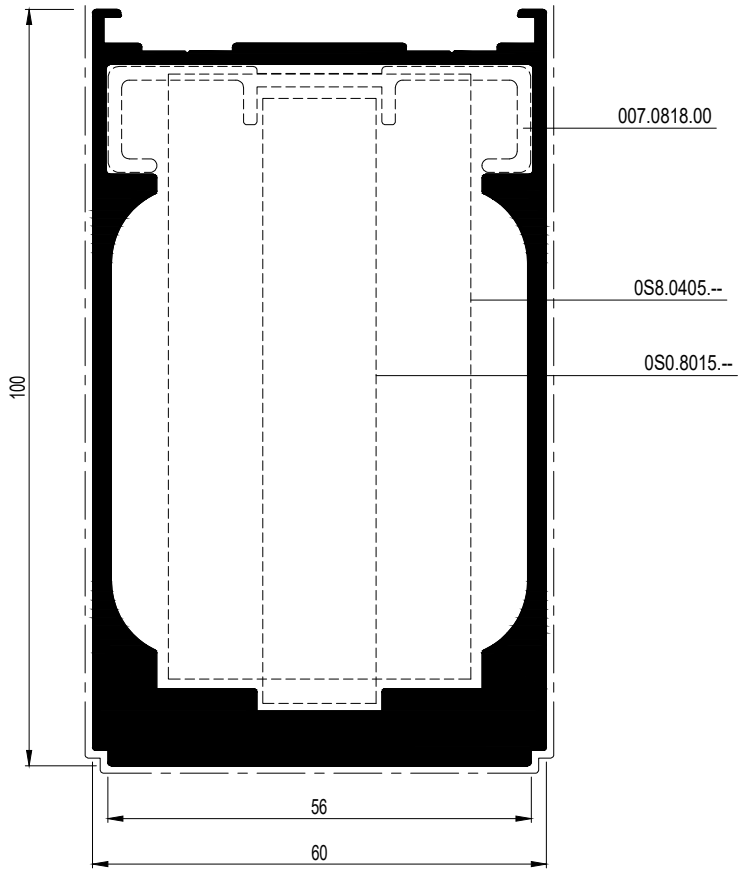

007.0813.XX	0S0.8015.-- 1 x 007.0818.00	Ix = 343.4 cm^4
007.0813.XX	0S8.0405.--	Ix = 376.4 cm^4

D0027583

CR 120

DRAGER
CHEVRON
RAFTER
DACHSPARREN

	A dm²/m	P dm²/m	Lm	Ix cm⁴	Wx cm³	ax mm	Iy cm⁴	Wy cm³	ay mm
007.0798.XX	37.98	30.0	7.00/5.00/4.00	186.767	27.010	50.85	50.143	16.714	30.00

X Y Y X 0

007.0798.XX

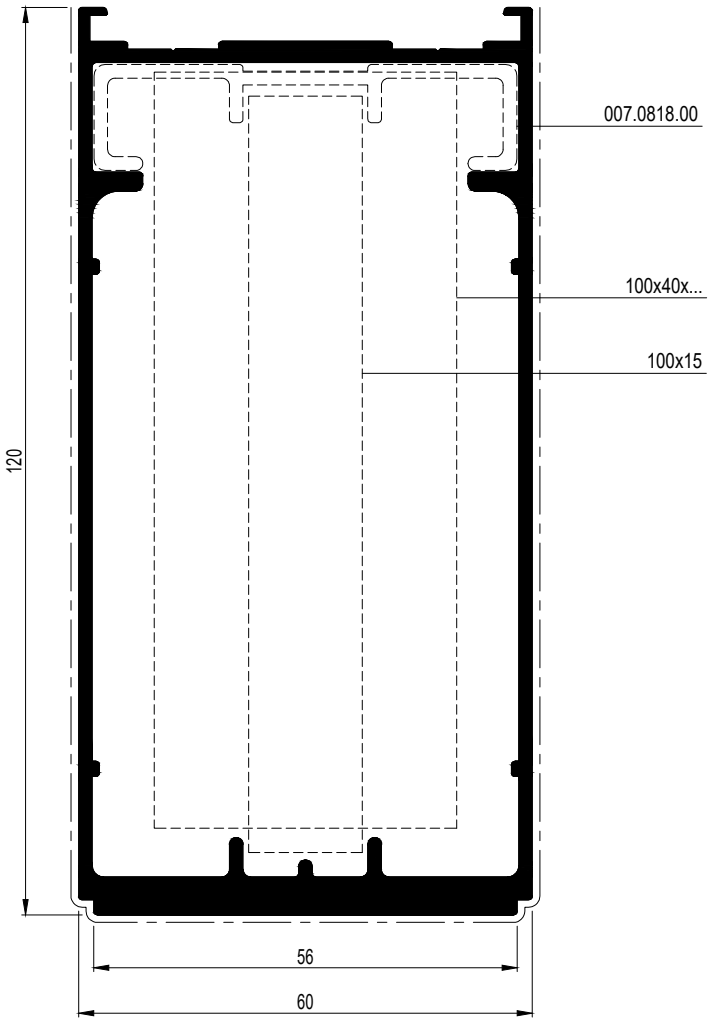

007.0798.XX	St/fer 100x40x5	Ix = 640.0 cm^4
007.0798.XX	St/fer 100x40x3	Ix = 481.0 cm^4
007.0798.XX	St/fer 100x15	Ix = 562.0 cm^4

C

D0069283

CR 120

DRAGER
CHEVRON
RAFTER
DACHSPARREN

	A dm²/m	P dm²/m	Lm	Ix cm⁴	Wx cm³	ax mm	Iy cm⁴	Wy cm³	ay mm	
007.0799.XX	44.05	36.0	5.00	499.551	55.967	60.94	87.265	29.088	30.00	X Y Y X 0

5° - 26°

007.0799.XX

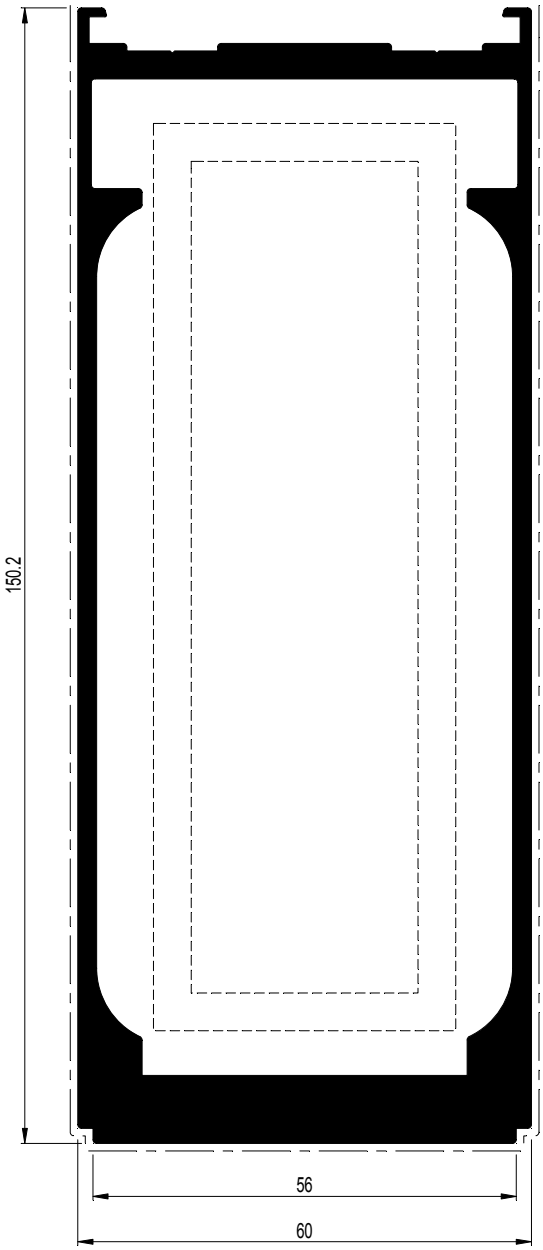

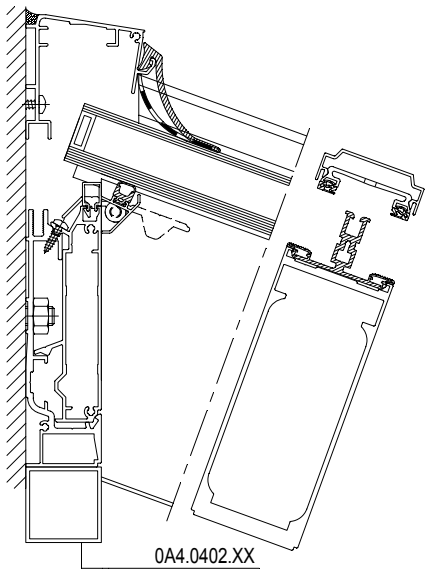

007.0799.XX St/fer 120x40x5 Ix = 1230 cm^4

C

D0070118

CR 120

DRAGER
CHEVRON
RAFTER
DACHSPARREN

	A dm²/m	P dm²/m	Lm	Ix cm⁴	Wx cm³	ax mm	Iy cm⁴	Wy cm³	ay mm
007.0797.XX	33.66	26.0	7.00/5.00	77.689	15.502	50.12	36.837	12.279	30.00

007.0797.XX

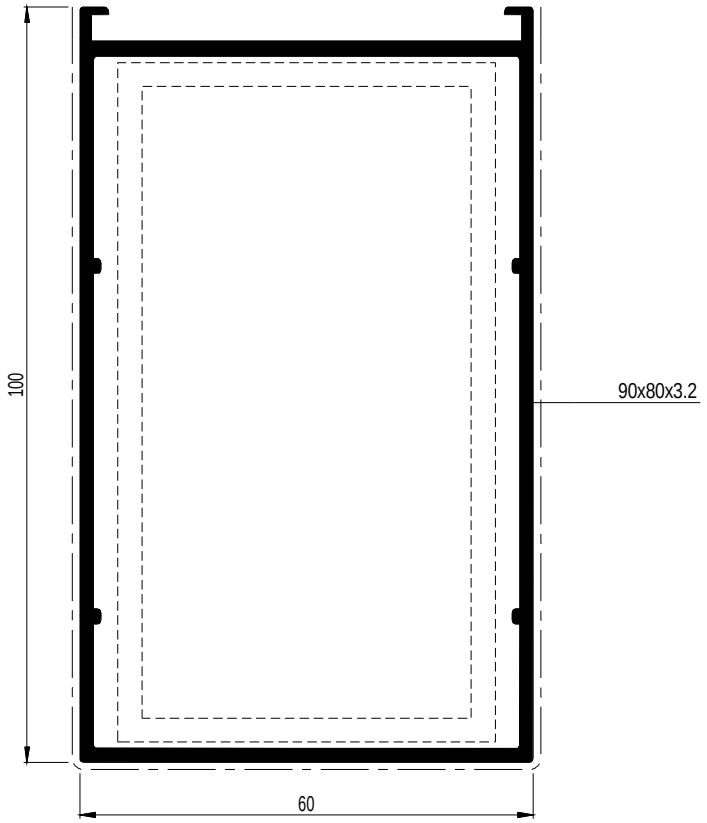

007.0798.XX	St/fer 90x50x3.2 2 x 007.0818.00	Ix = 345.0 cm^4

D0069703

CR 120

DRAGER
CHEVRON
RAFTER
DACHSPARREN

	A dm²/m	P dm²/m	Lm	Ix cm⁴	Wx cm³	ax mm	Iy cm⁴	Wy cm³	ay mm
007.0803.XX	33.98	26.0	5.00/7.00/4.00	119.471	20.438	41.55	44.044	14.681	30.00
007.0818.00	-	-	7.00	0.337	0.345	4.24	6.808	2.440	27.90

007.0803.XX

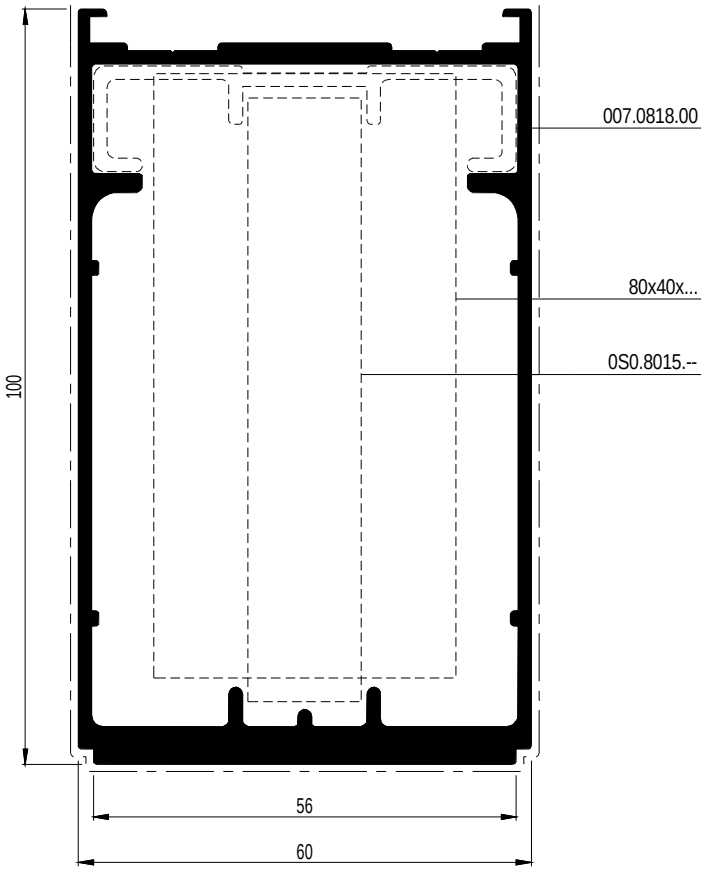

007.0818.00

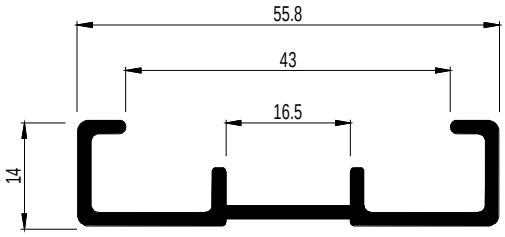

007.0803.XX	0S0.8015.-- 1 x 007.0818.00	Ix = 311.8 cm⁴
007.0803.XX	0S8.0403.--	Ix = 276.2 cm⁴

C

D0040793

CR 120

DRAGER
CHEVRON
RAFTER
DACHSPARREN

	A dm²/m	P dm²/m	Lm	Ix cm⁴	Wx cm³	ax mm	Iy cm⁴	Wy cm³	ay mm
007.0844.XX	6,49	0,7	7,00	0,086	0,173	4,99	0,711	0,616	11,55
007.1808.XX	35,55	14,0	7,00	75,933	15,168	49,94	16,949	8,004	19,70

X Y Y X 0

007.1808.XX

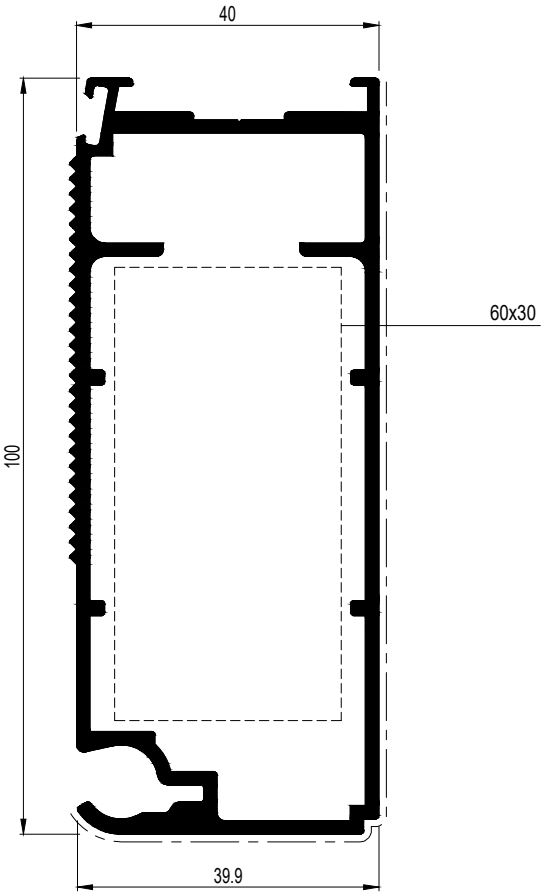

007.0844.XX

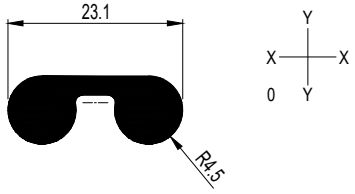

C

D0100957

	A dm²/m	P dm²/m	Lm	Ix cm⁴	Wx cm³	ax mm	Iy cm⁴	Wy cm³	ay mm
007.0804.01	-	-	7,00/5,00	3,205	1,425	10,32	6,470	2,157	30,00
007.0805.01	-	-	7,00	-	-	-	-	-	-
007.0806.01	-	-	7,00/5,00	2,660	1,301	12,35	2,553	1,043	12,28
007.0807.01	-	-	7,00	-	-	-	-	-	-

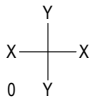

007.0804.01
HPVC

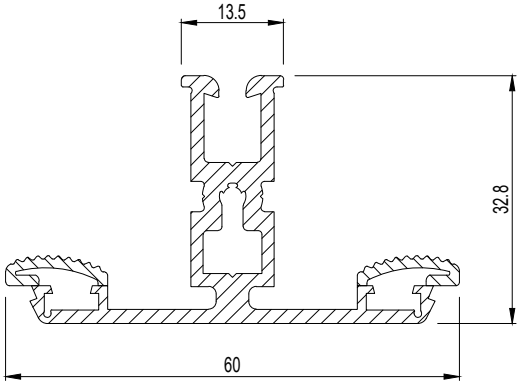

007.0805.01
HPVC

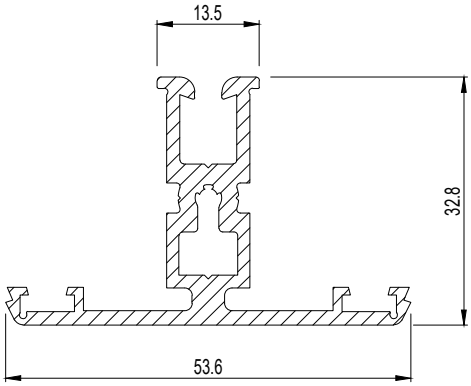

007.0806.01
HPVC

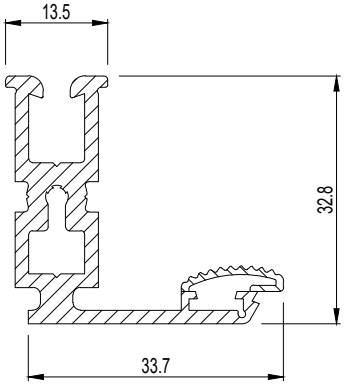

007.0807.01
HPVC

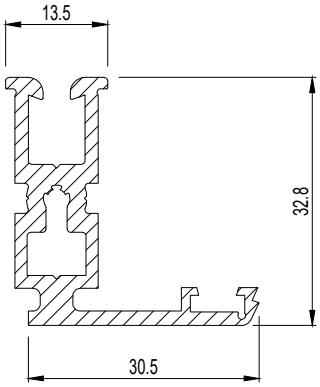

C

D0040796

ZIJKANT DRAGER
PROFILE DE RIVE
EDGE SECTION
SEITENSPARREN

	A dm²/m	P dm²/m	Lm	Ix cm⁴	Wx cm³	ax mm	Iy cm⁴	Wy cm³	ay mm
007.0827.XX	31.57	16.9	7.00	48.829	8.814	55.40	29.852	7.991	33.14
007.0828.XX	12.23	0.7	7.00/5.00	0.069	0.116	4.55	1.439	0.701	20.51

007.0827.XX

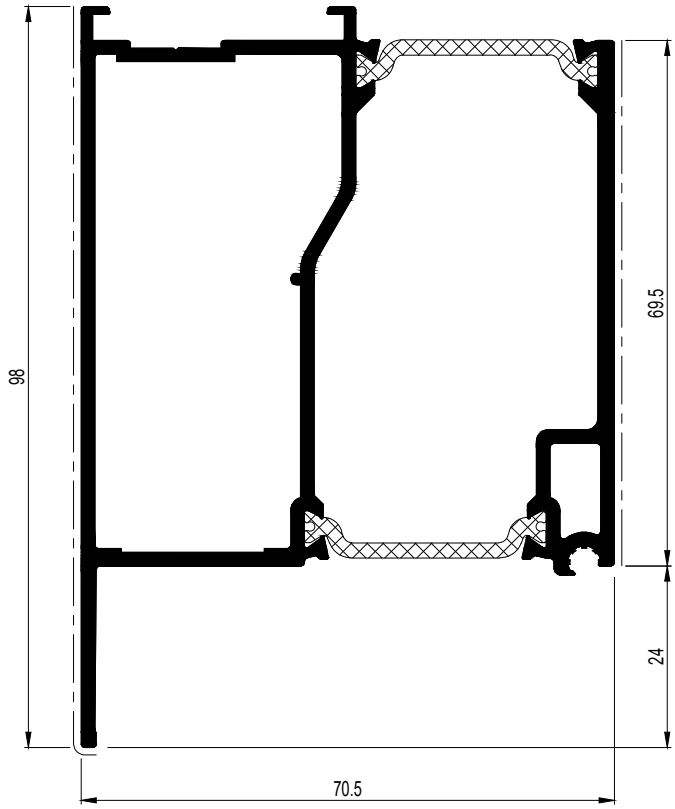

007.0828.XX

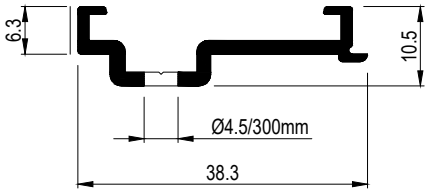

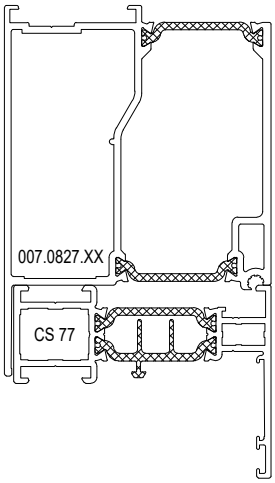

C

D0040803

CR 120

ZIJKANT DRAGER
PROFILE DE RIVE
EDGE SECTION
SEITENSPARREN

	A dm²/m	P dm²/m	Lm	Ix cm⁴	Wx cm³	ax mm	Iy cm⁴	Wy cm³	ay mm
007.0832.XX	41,97	24,7	7,00	91,260	13,401	68,10	76,243	18,575	41,05
007.0848.XX	38,96	16,8	7,00	11,395	2,111	53,97	22,237	4,527	27,68

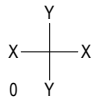

007.0848.XX

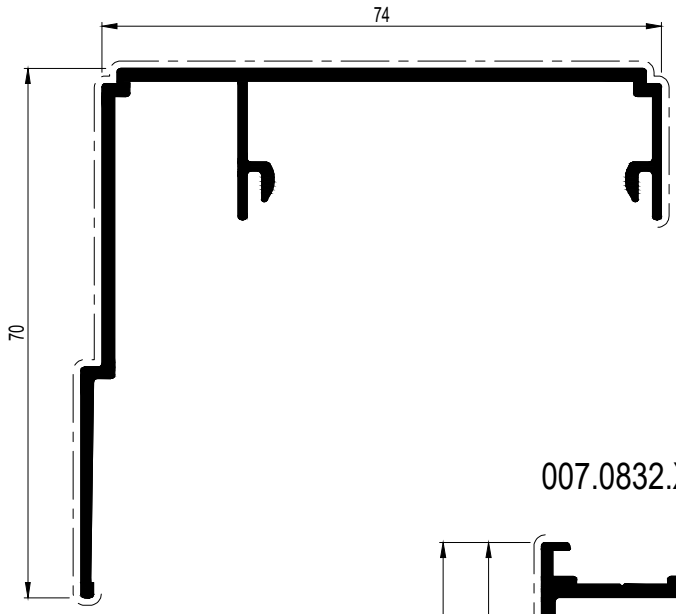

007.0832.XX

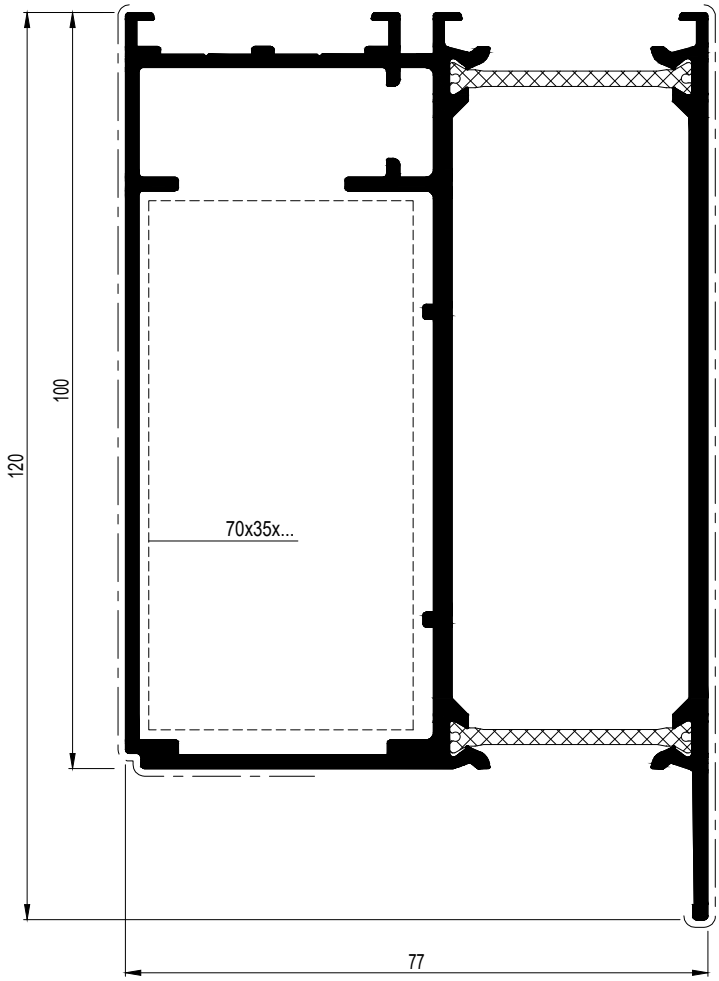

007.0832.XX	
087.9754.01	---

D0027584

C

KLEM- EN AFDEKPROFIEL DRAGER
SERREUR ET CAPOT CHEVRON
PRESSURE PLATE AND FACE CAP RAFTER
GLASHALTE- UND ABDECKPROFIL DACHSPARRE

	A dm²/m	P dm²/m	Lm	Ix cm⁴	Wx cm³	ax mm	Iy cm⁴	Wy cm³	ay mm
007.0801.XX	21,31	9,6	7,00/5,00	0,582	0,403	14,44	6,675	2,384	28,00
007.0816.XX	19,14	8,8	7,00	0,538	0,393	13,70	5,093	1,819	28,00
007.0831.XX	31,92	15,1	7,00	11,643	2,288	50,89	10,930	2,913	37,52
021.4568.17	9,28	-	7,00	0,306	0,302	10,15	0,097	0,194	5,00
034.1060.XX	16,75	6,6	7,00/5,00	0,118	0,181	2,97	4,231	1,692	25,01

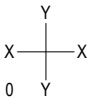

007.0801.XX

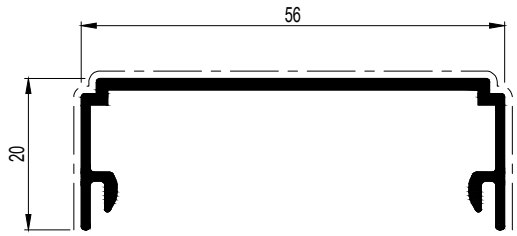

007.0831.XX

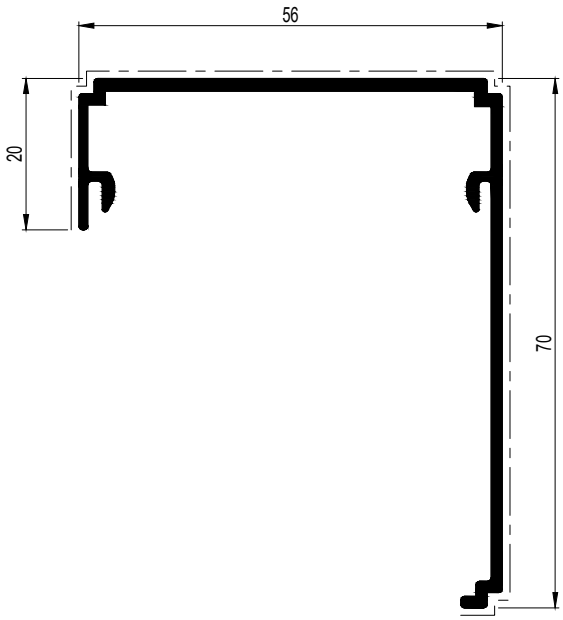

007.0816.XX

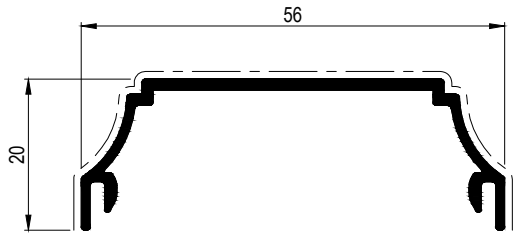

034.1060.XX

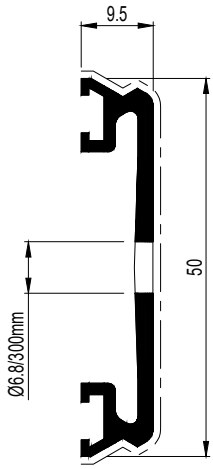

021.4568.17

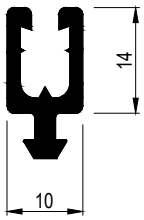

D0004343

CR 120

KLEMPROFIEL
SERREUR
PRESSURE PLATE
GLASHALTEPROFIL

	A dm²/m	P dm²/m	Lm	Ix cm⁴	Wx cm³	ax mm	Iy cm⁴	Wy cm³	ay mm
007.0933.00	-	-	7,00	2,250	0,812	9,78	2,551	1,135	13,62

X
Y Y
X 0

007.0933.00

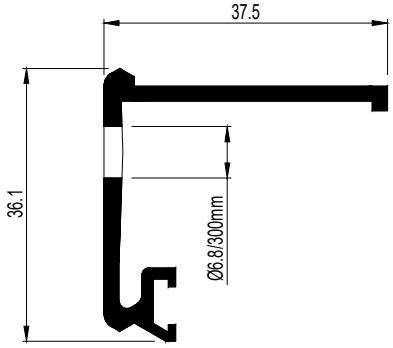

C

D2001216

GOOT
GOUTTIERE
GUTTER
RINNENPROFIL

	A dm²/m	P dm²/m	Lm	Ix cm⁴	Wx cm³	ax mm	Iy cm⁴	Wy cm³	ay mm
007.0862.XX	107,63	33,3	7,00	837,806	56,256	97,07	416,870	47,271	88,19

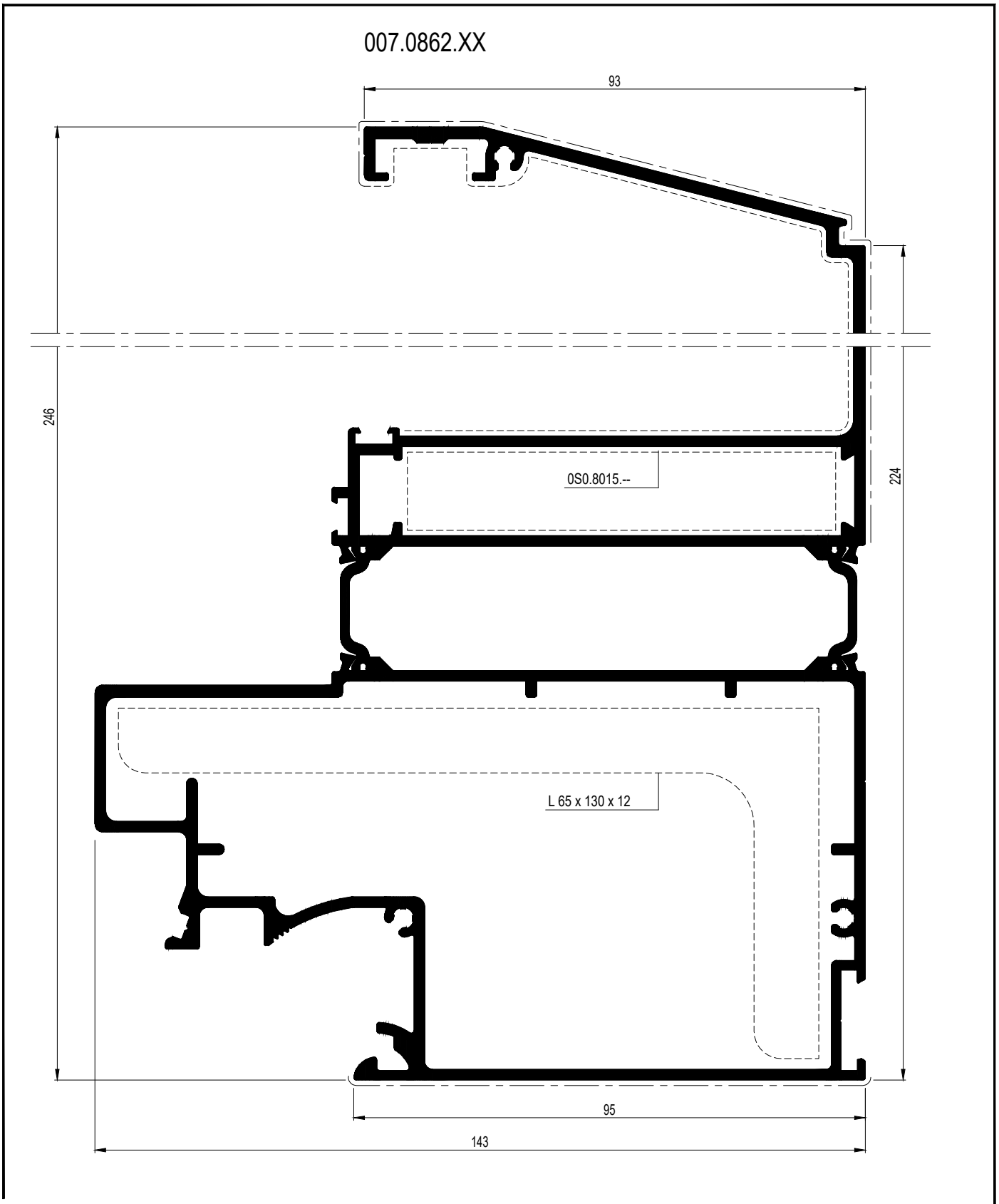

007.0862.XX	
071.6620.00 072.6425.00	---

D0027588

CR 120

GOOT
GOUTTIERE
GUTTER
RINNENPROFIL

	A dm²/m	P dm²/m	Lm	Ix cm⁴	Wx cm³	ax mm	Iy cm⁴	Wy cm³	ay mm
007.0876.XX	90.75	27.3	7.00/5.00	456.212	38.699	86.11	138.217	21.562	64.10

HI

007.0876.XX

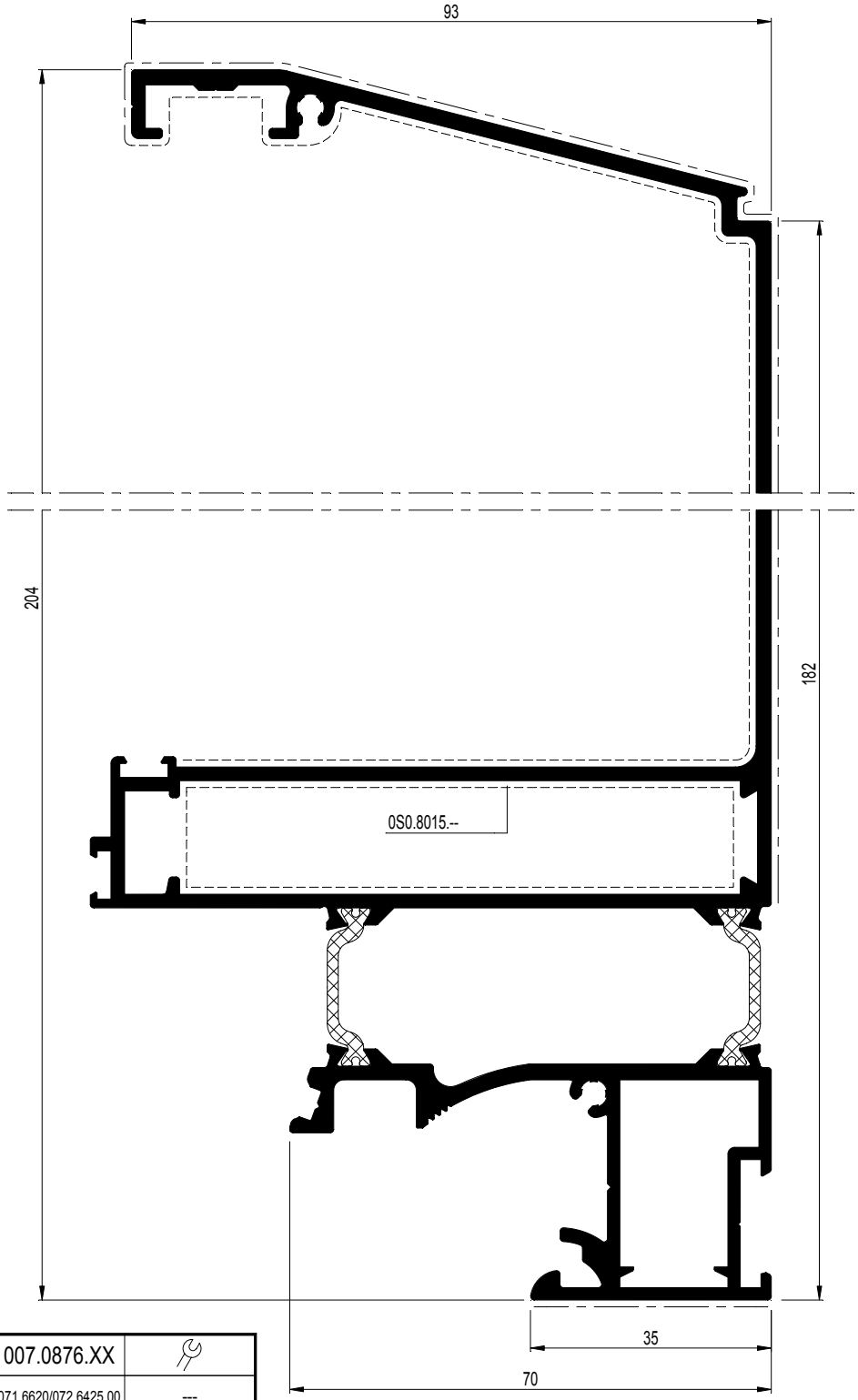

007.0876.XX	
071.6620/072.6425.00	---
071.6866.00	097.0523.00
087.9752.01	---

D0022629

C

CR 120

GOOT
GOUTTIERE
GUTTER
RINNENPROFIL

	A dm²/m	P dm²/m	Lm	Ix cm⁴	Wx cm³	ax mm	Iy cm⁴	Wy cm³	ay mm
007.0880.XX	90.73	27.3	7.00/5.00/4.00	418.353	36.352	79.92	138.219	21.562	64.10

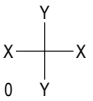

007.0880.XX

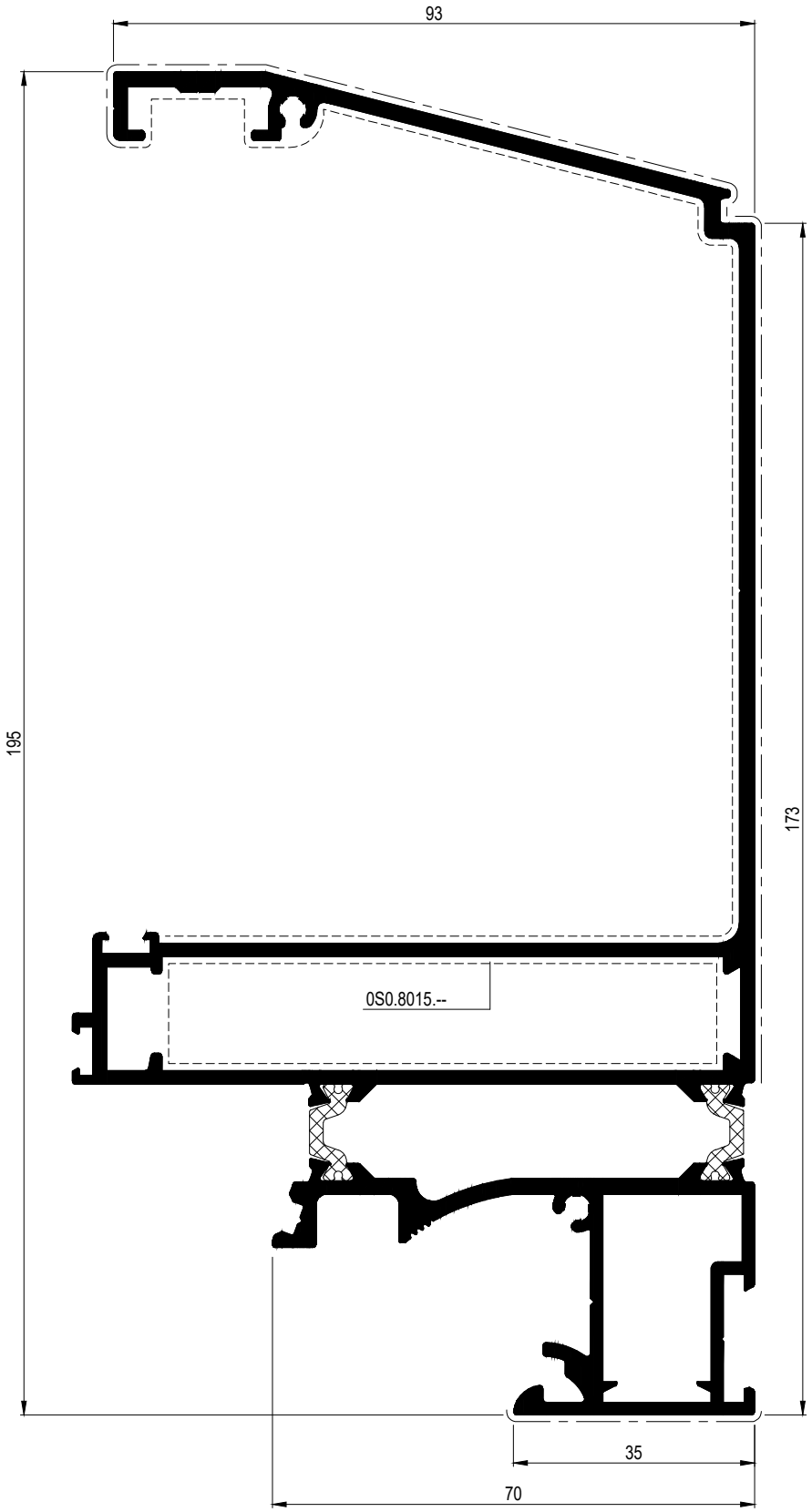

007.0880.XX	
071.6620/072.6425.00	---
071.6866.00	097.0523.00

D0004348

C

CR 120

GOOT
GOUTTIERE
GUTTER
RINNENPROFIL

	A dm²/m	P dm²/m	Lm	Ix cm⁴	Wx cm³	ax mm	Iy cm⁴	Wy cm³	ay mm
007.0878.XX	76.30	23.8	5.00/7.00	337.729	37.245	64.32	118.624	19.626	60.44

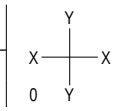

007.0878.XX

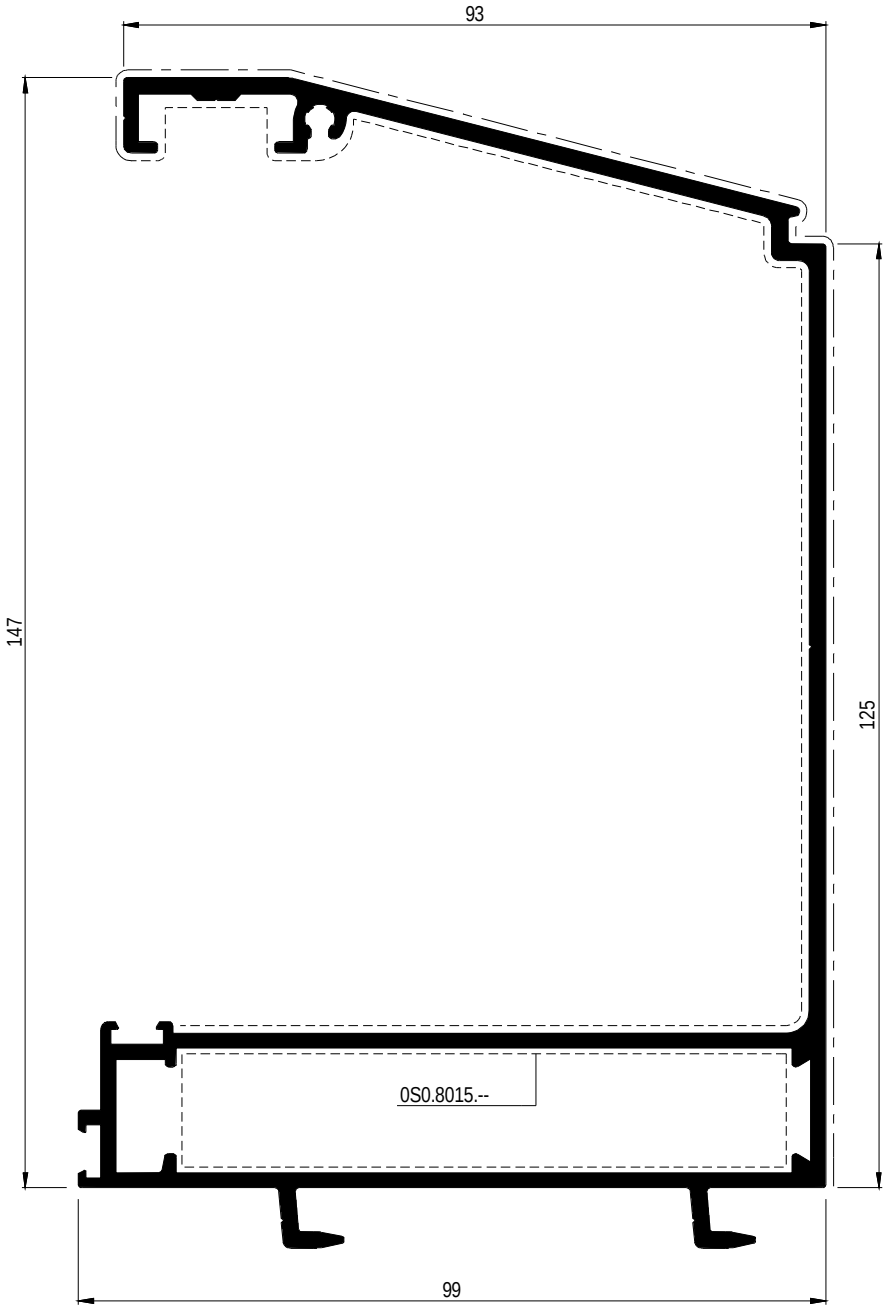

007.0878.XX	
071.6620/072.6425.00	---

C

D0040838

CR 120

KOPPELPROFIEL
PROFILE DE RACCORDEMENT
CONNECTION PROFILE
KUPPLUNGSPROFIL

	A dm²/m	P dm²/m	Lm	Ix cm⁴	Wx cm³	ax mm	Iy cm⁴	Wy cm³	ay mm
007.0902.00	-	-	7.00	88.214	13.412	65.77	25.687	4.071	18.91

007.0902.00

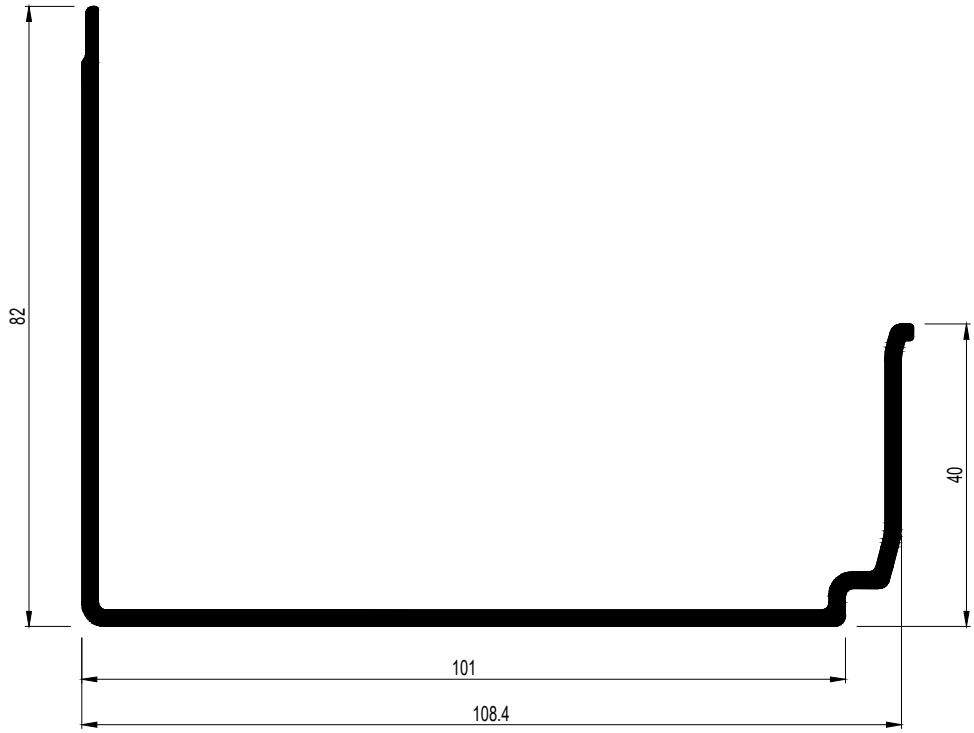

C

D0040839

CR 120

GOOT
GOUTTIERE
GUTTER
RINNENPROFIL

	A dm²/m	P dm²/m	Lm	Ix cm⁴	Wx cm³	ax mm	Iy cm⁴	Wy cm³	ay mm
021.4580.XX	65.00	29.0	7.00	198.365	30.546	64.94	63.606	10.565	60.20

X
Y Y
X 0

021.4580.XX

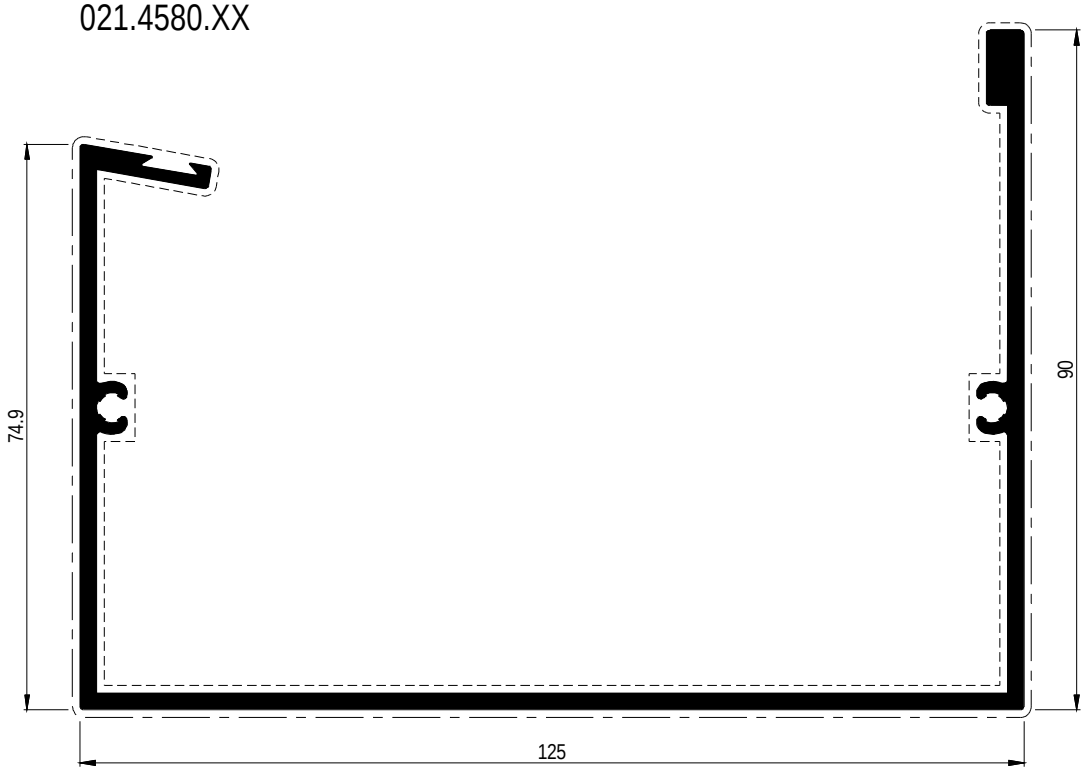

C

D0040842

CR 120

GOOT EN KOPPELPROFIEL
GOUTTIERE ET PROFILE DE RACCORDEMENT
GUTTER AND CONNECTION PROFILE
RINNENPROFIL UND KUPPLUNGSPROFIL

	A dm²/m	P dm²/m	Lm	Ix cm⁴	Wx cm³	ax mm	Iy cm⁴	Wy cm³	ay mm
007.0879.04	-	-	7.00	-	-	-	-	-	-
030.0138.00	-	-	7.00	0.043	0.102	4.01	0.150	0.174	8.39
0I7.0880.XX	32.38	3.6	7.00/5.00/4.00	7.394	3.450	21.43	18.360	4.324	42.47

007.0879.04
HPVC

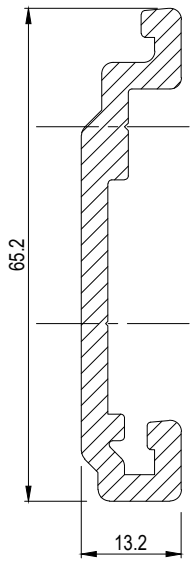

0i7.0880.XX

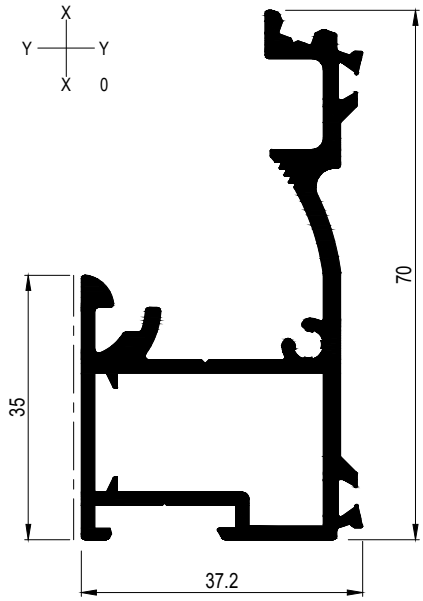

030.0138.00

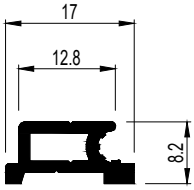

0I7.0880.XX	
071.6866.00	097.0523.00

D0040836

C

CR 120

GOOT INTEGRATIE ROLLUIK
GOUTTIERE POUR INTEGRATION VOLET ROULANT
GUTTER PROFILE INTEGRATION ROLLER SHUTTER
RINNENPROFIL INTEGRATION ROLLADEN

	A dm²/m	P dm²/m	Lm	Ix cm⁴	Wx cm³	ax mm	Iy cm⁴	Wy cm³	ay mm
007.0875.XX	67.18	37.3	7.00	76.048	19.846	38.32	834.594	69.905	119.39

X Y Y X 0

007.0875.XX

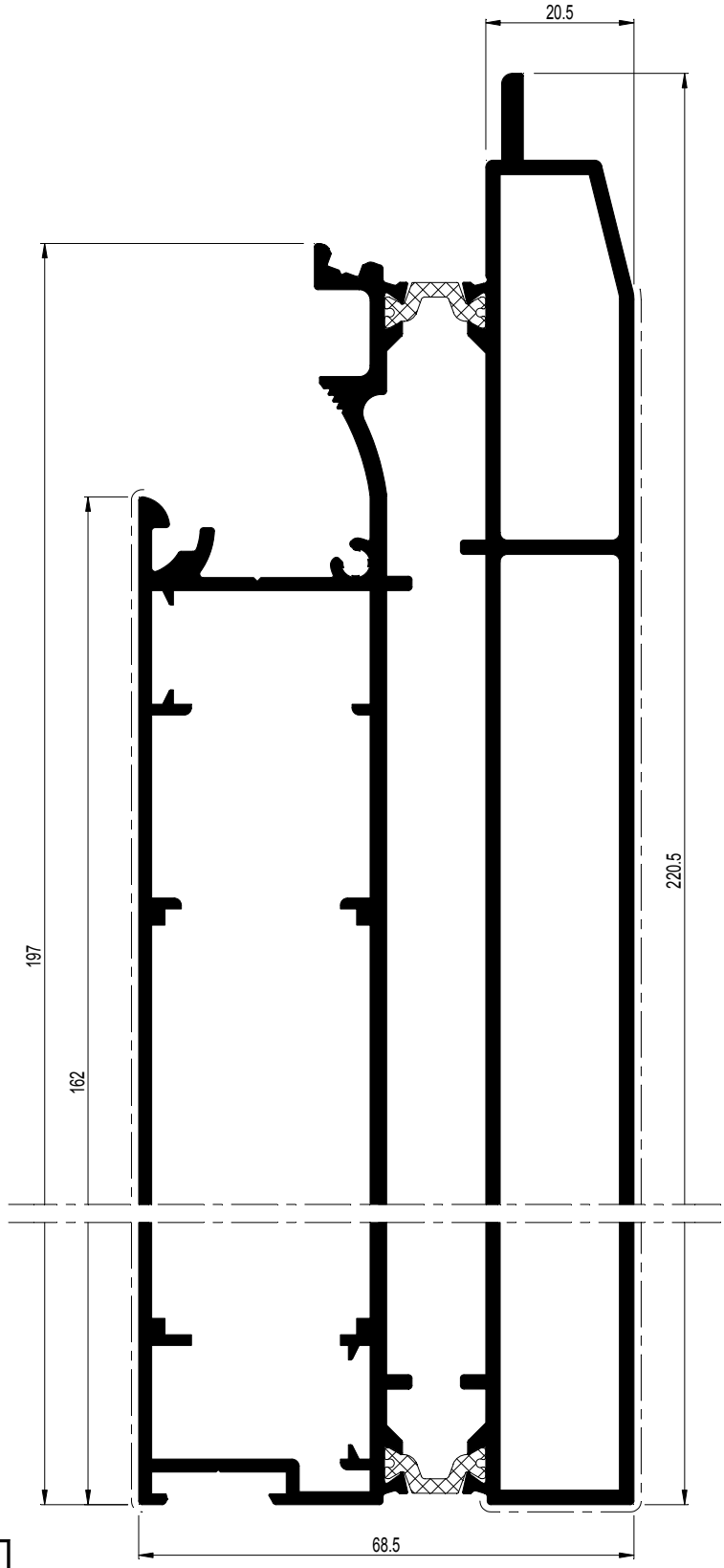

007.0875.XX	
071.6866.00 (2x)	097.0523.00

C

D0022573

CR 120

GOOT INTEGRATIE ROLLUIK
GOUTTIERE INTEGRATION VOLET ROULANT
GUTTER PROFILE INTEGRATION ROLLER SHUTTER
RINNENPROFIL INTEGRATION ROLLADEN

	A dm²/m	P dm²/m	Lm	Ix cm⁴	Wx cm³	ax mm	Iy cm⁴	Wy cm³	ay mm
007.0872.XX	87.29	-	7.00	987.897	71.633	137.91	42.225	8.890	47.50
007.0884.00	-	-	7.00	489.943	40.294	112.41	11.232	2.905	38.66

007.0872.XX

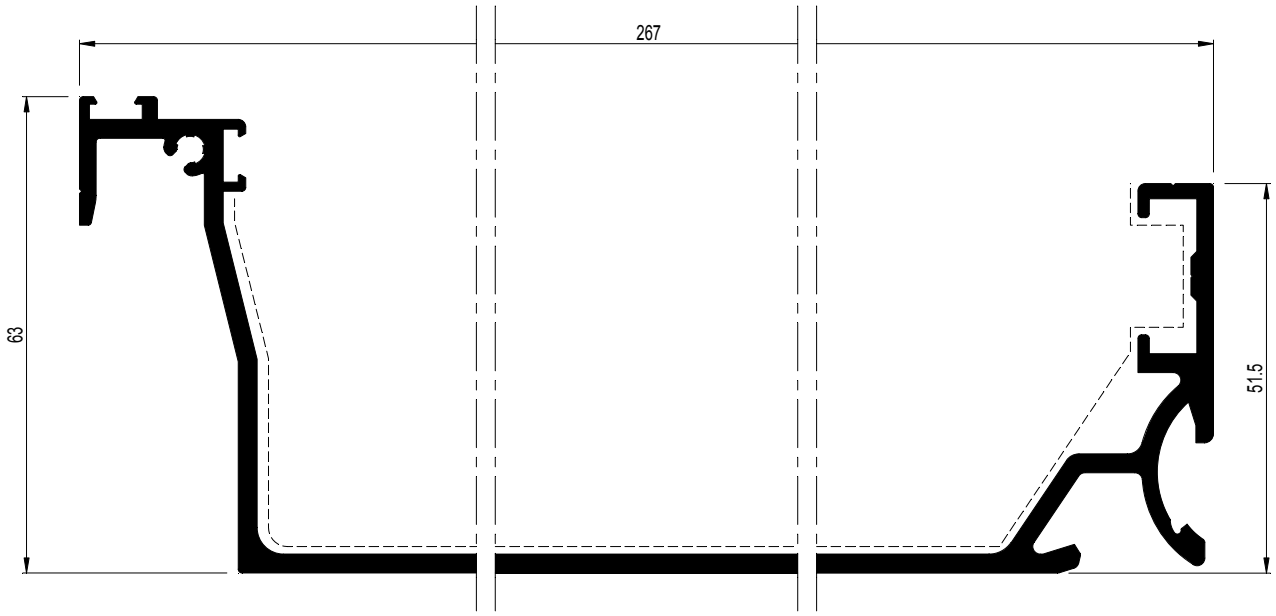

007.0884.00

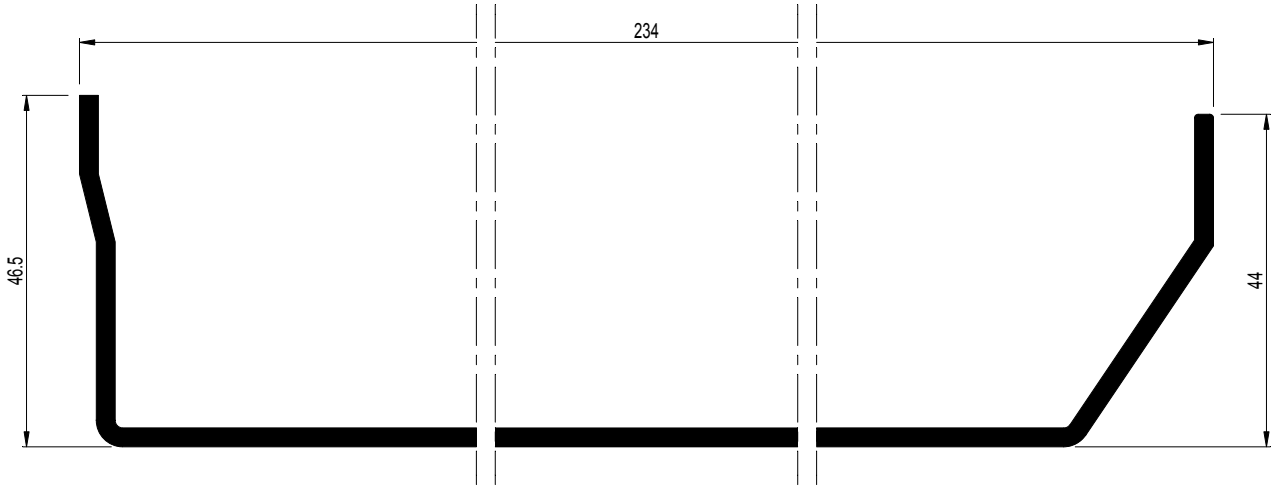

007.0872.XX	
071.6620/072.6425.00	---

D0022811

CR 120

AFDEKPROFIEL ROLLUIK
PROFILE DE RECOUVREMENT VOLET ROULANT
COVERING PROFILE ROLLER SHUTTER
ABDECKPROFIL ROLLADEN

	A dm²/m	P dm²/m	Lm	Ix cm⁴	Wx cm³	ax mm	Iy cm⁴	Wy cm³	ay mm
007.0873.XX	44.49	14.7	7.00	1.303	0.655	19.89	92.356	12.043	72.23
007.0874.XX	53.57	23.9	7.00	212.643	20.653	102.96	54.444	7.621	71.44

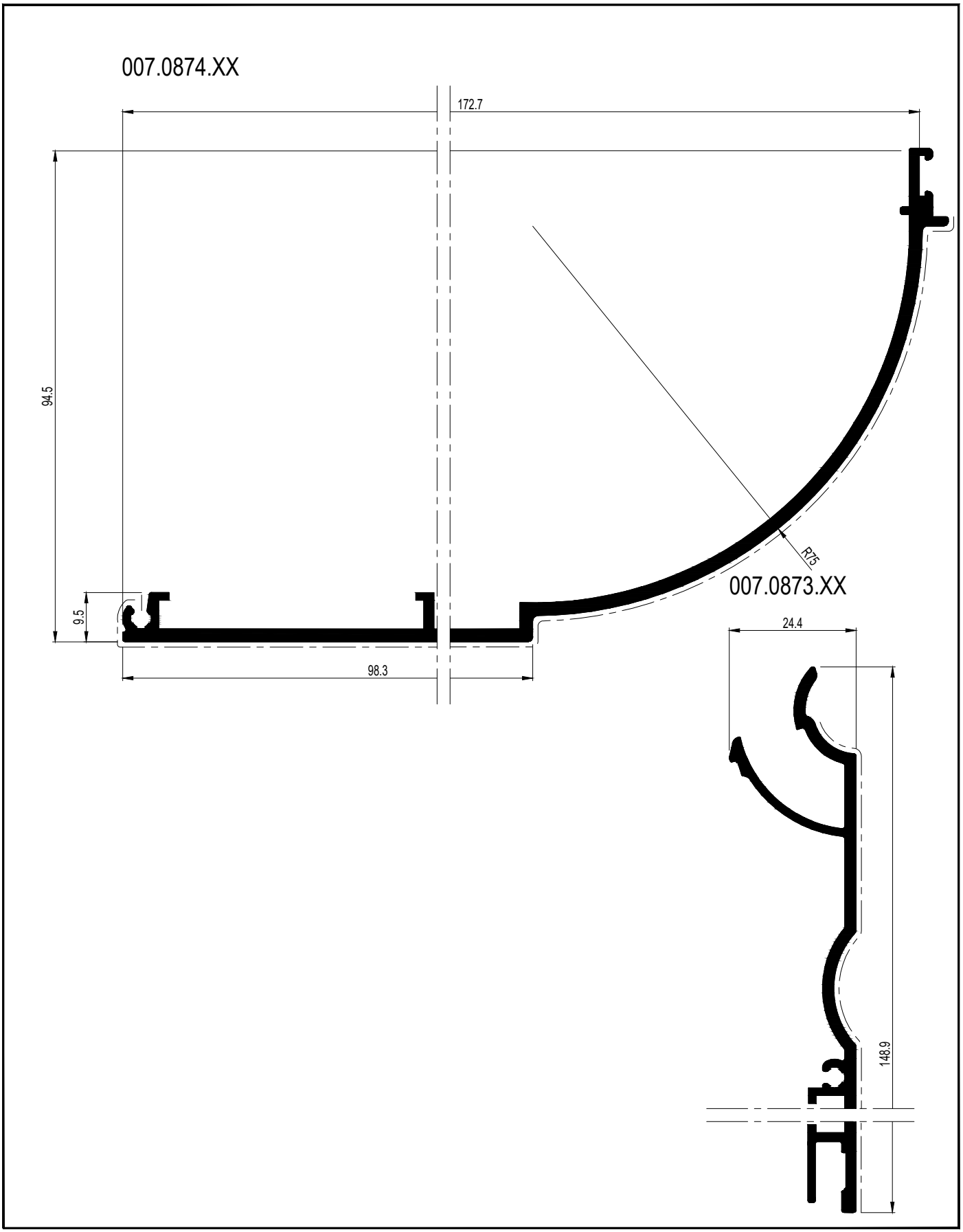

C

CR 120

AFDEKPROFIEL ROLLUIK
PROFILE DE RECOUVREMENT VOLET ROULANT
COVERING PROFILE ROLLER SHUTTER
ABDECKPROFIL ROLLADEN

	A dm²/m	P dm²/m	Lm	Ix cm⁴	Wx cm³	ax mm	Iy cm⁴	Wy cm³	ay mm
007.0916.XX	48,75	21,6	7,00	1,820	0,827	4,20	153,400	17,348	88,43
007.0917.XX	41,23	17,3	7,00	1,353	0,605	3,82	90,040	11,136	80,85

X Y Y X 0

007.0916.XX

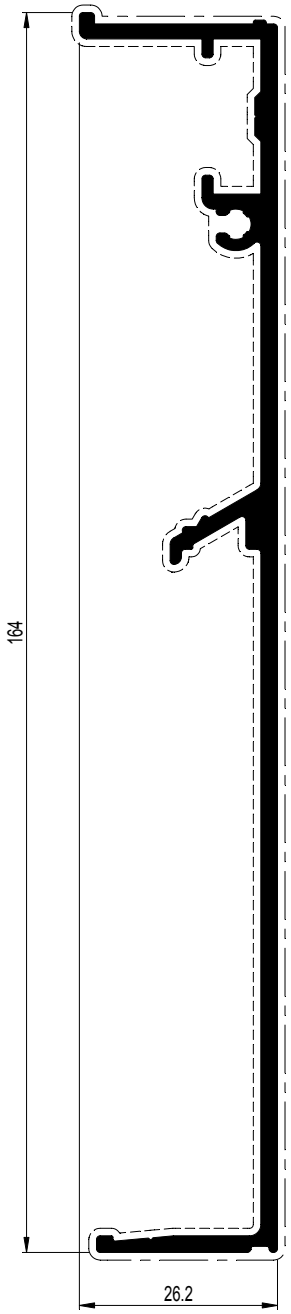

007.0917.XX

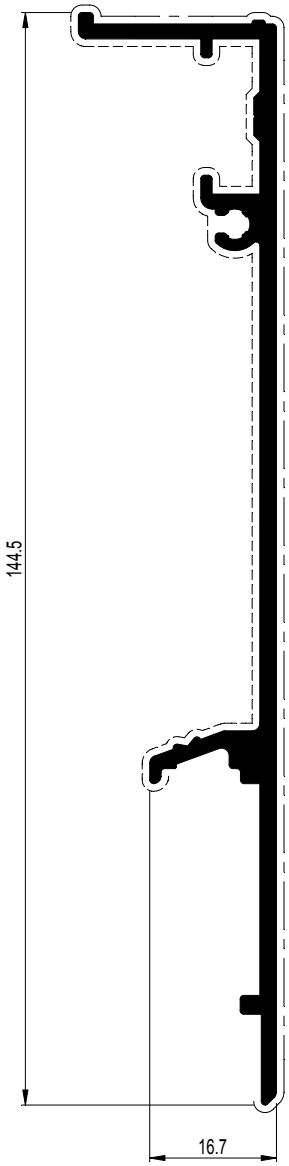

D2001588

C

CR 120

AFDEKPROFIEL ROLLUIK
PROFILE DE RECOUVREMENT VOLET ROULANT
COVERING PROFILE ROLLER SHUTTER
ABDECKPROFIL ROLLADEN

	A dm²/m	P dm²/m	Lm	Ix cm⁴	Wx cm³	ax mm	Iy cm⁴	Wy cm³	ay mm
007.0918.XX	62,13	22,6	7,00	1,524	0,724	3,36	359,554	31,080	115,44
007.0919.XX	43,54	17,6	7,00	0,264	0,226	1,99	144,279	15,795	91,35

X Y Y X 0

007.0918.XX

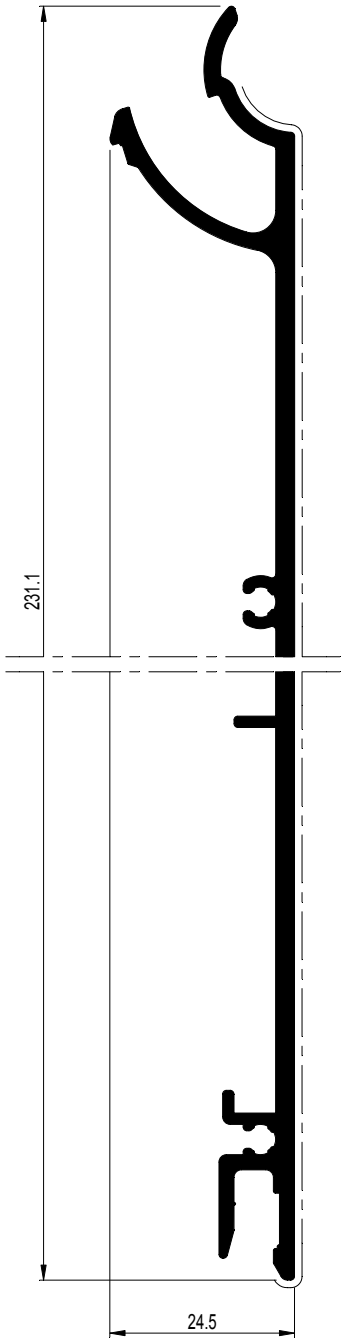

007.0919.XX

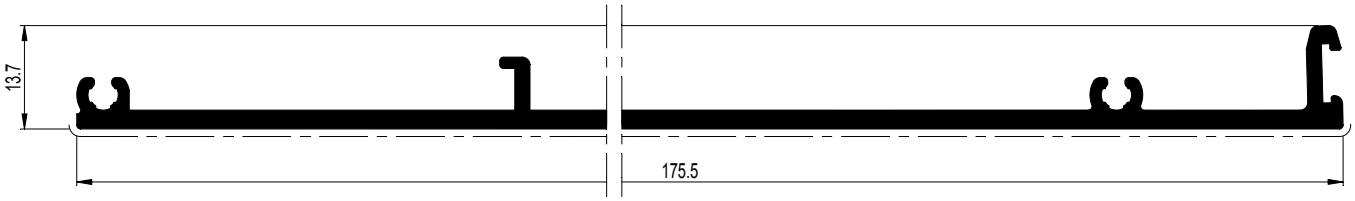

D2001589

C

CR 120

GORDIJNRAIL
RAIL A RIDEAU
CURTAIN RAIL
GARDINENSCHIENE

	A dm²/m	P dm²/m	Lm	Ix cm⁴	Wx cm³	ax mm	Iy cm⁴	Wy cm³	ay mm
007.0861.XX	42.86	30.1	7.00	2.292	0.940	18.62	78.029	12.749	58.79

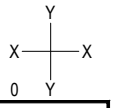

007.0861.XX

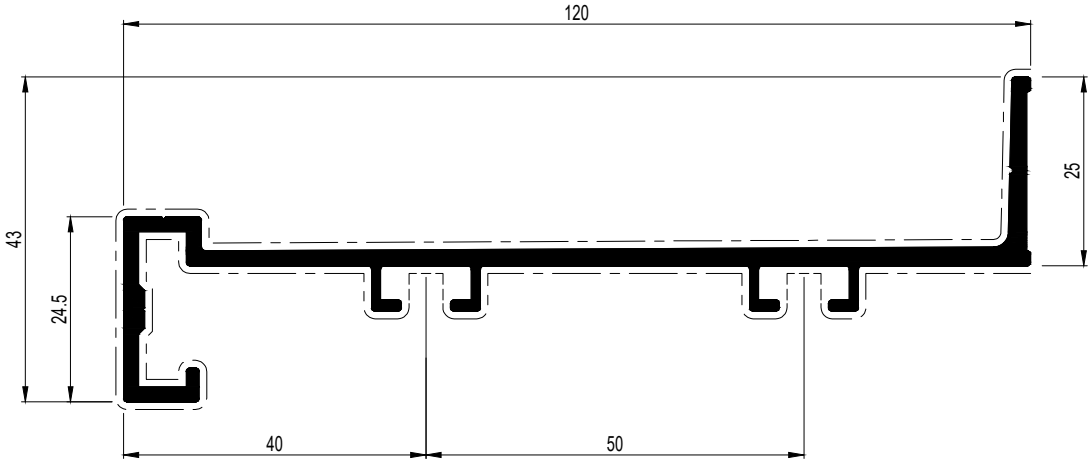

C

007.0861.XX	
071.6620/072.6425.00	---

D0040844

CR 120

VERHOGING GOOT
PROFILE REHAUSSE DE GOUTTIERE
RAISING PROFILE GUTTER SECTION
RINNENVERBREITERUNG

	A dm²/m	P dm²/m	Lm	Ix cm⁴	Wx cm³	ax mm	Iy cm⁴	Wy cm³	ay mm
007.0869.XX	43.86	33.7	5.00/7.00	13.992	3.915	25.96	53.163	8.266	64.32
007.0882.XX	31.15	10.7	5.00/7.00	2.425	0.948	10.92	15.486	3.383	45.77

X Y Y X 0

007.0869.XX

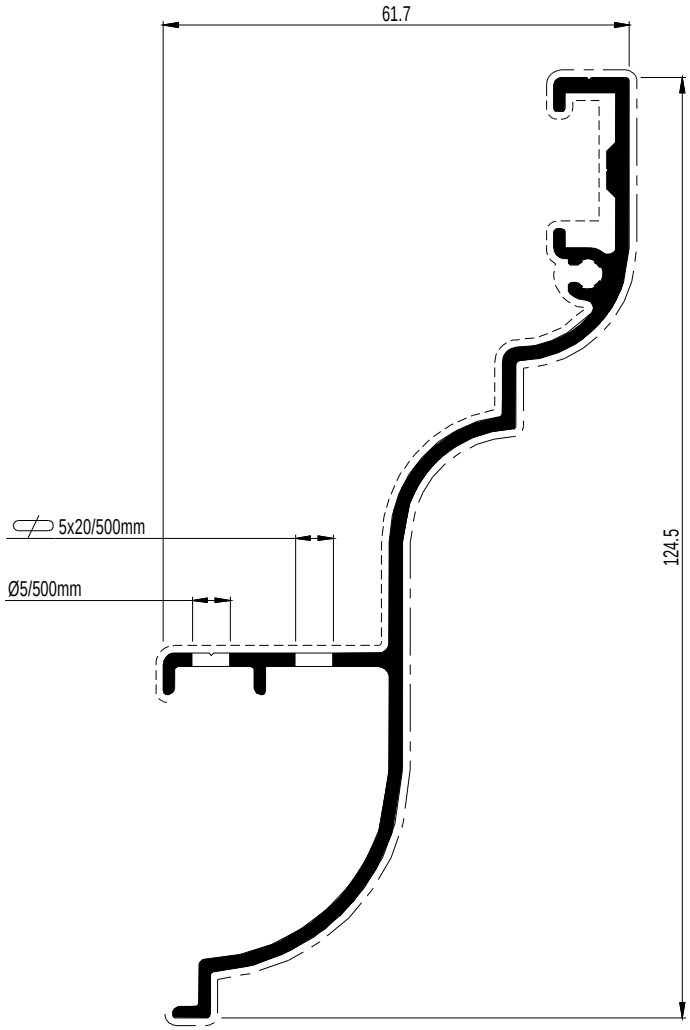

007.0882.XX

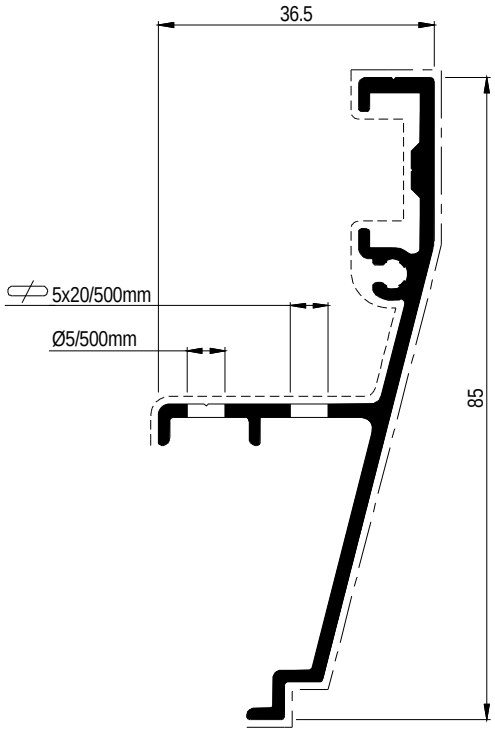

007.0869.XX	
071.6620/072.6425.00	---

007.0882.XX	
071.6620/072.6425.00	---

C

D0040849

CR 120

VERHOGING GOOT
PROFILE REHAUSSE DE GOUTTIERE
RAISING PROFILE GUTTER SECTION
RINNENVERBREITERUNG

	A dm²/m	P dm²/m	Lm	Ix cm⁴	Wx cm³	ax mm	Iy cm⁴	Wy cm³	ay mm
007.0883.XX	42.19	34.3	5.00/7.00	13.167	3.547	24.58	56.051	8.176	68.56
007.0896.XX	40.58	15.2	5.00/7.00	3.081	1.105	8.61	56.140	8.429	66.61

X Y Y X 0

007.0883.XX

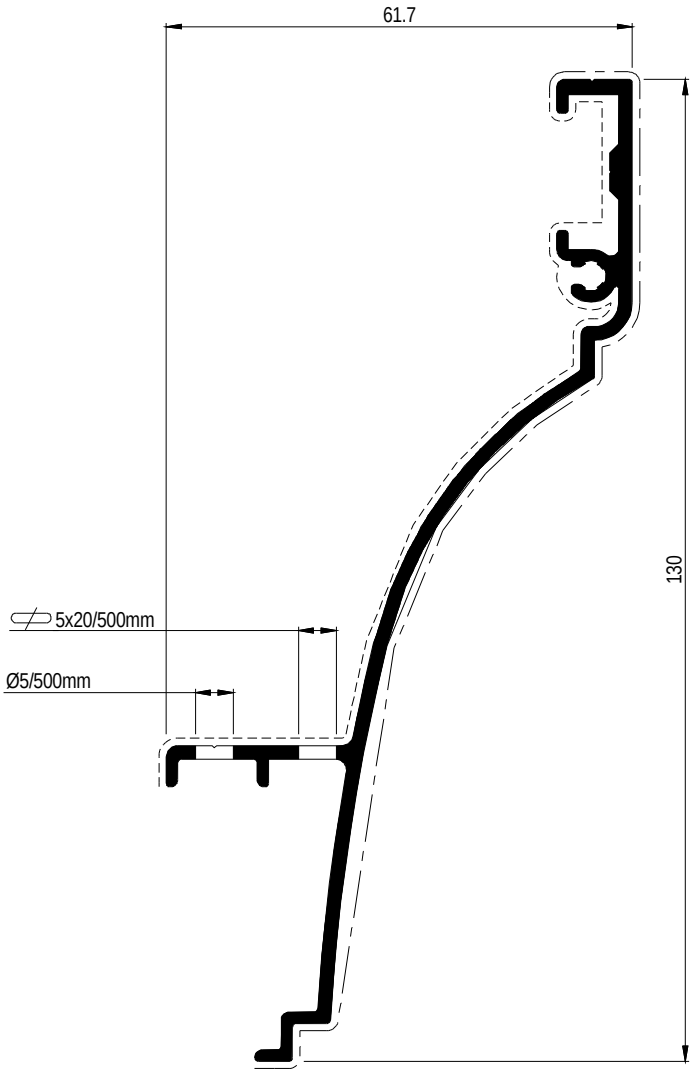

007.0896.XX

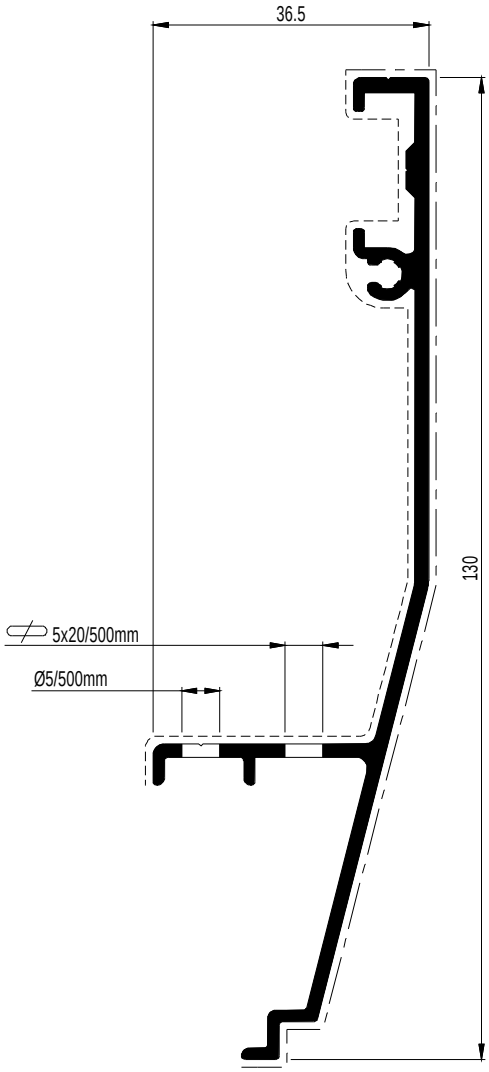

007.0883.XX	
071.6620/072.6425.00	---

007.0896.XX	
071.6620/072.6425.00	---

D0040850

C

CR 120

VERHOGING GOOT
PROFILE REHAUSSE DE GOUTTIERE
RAISING PROFILE GUTTER SECTION
RINNENVERBREITERUNG

	A dm²/m	P dm²/m	Lm	Ix cm⁴	Wx cm³	ax mm	Iy cm⁴	Wy cm³	ay mm
007.0852.XX	46.49	12.2	7.00/5.00	32.357	7.928	29.19	86.571	14.545	39.48
007.0853.XX	14.18	3.5	7.00	0.664	0.384	11.10	1.640	0.612	26.79

X Y Y X 0

007.0852.XX

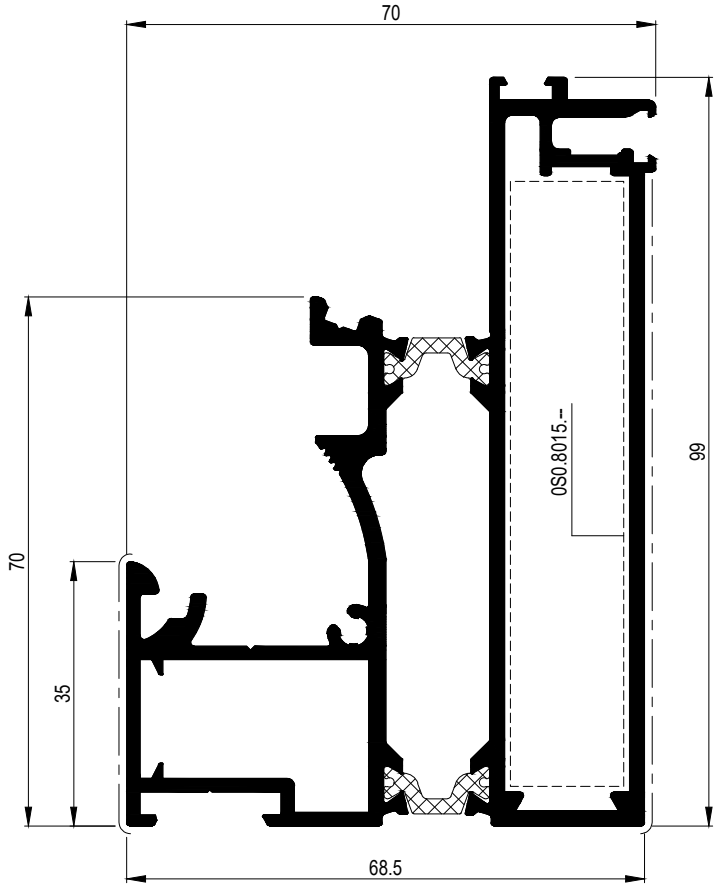

007.0853.XX

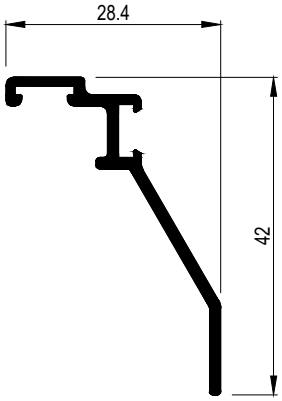

007.0852.XX	
071.6866.00	097.0523.00

D0069501

C

CR 120

AFDEKPROFIEL
PROFILE DE RECOUVREMENT
COVERING PROFILE
ABDECKPROFIL

	A dm²/m	P dm²/m	Lm	Ix cm⁴	Wx cm³	ax mm	Iy cm⁴	Wy cm³	ay mm
007.0953.XX	35,99	9,1	6,00	5,170	1,430	36,16	11,286	2,028	55,65
007.0954.XX	30,95	7,8	6,00	5,448	1,510	36,09	11,038	2,167	50,93

Y
X — X
0 Y

007.0953.XX

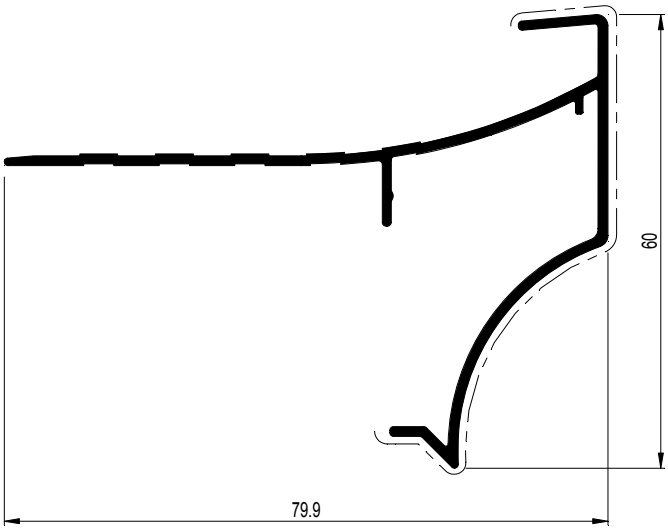

007.0954.XX

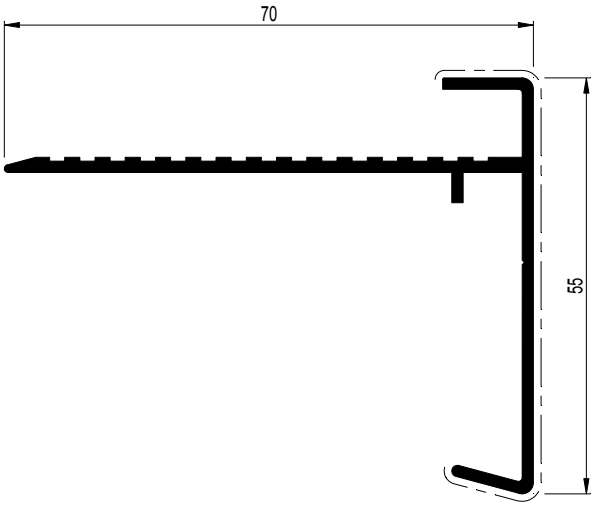

C

D2001546

CR 120

HOEKPROFIEL
PROFILE D'ANGLE
CORNER PROFILE
ECKPROFIL

	A dm²/m	P dm²/m	Lm	Ix cm⁴	Wx cm³	ax mm	Iy cm⁴	Wy cm³	ay mm
007.0951.XX	28,19	10,4	6,00	7,528	1,693	25,55	5,986	1,558	38,42
007.0952.XX	21,81	6,4	6,00	3,704	1,017	13,28	3,497	1,056	33,10

007.0951.XX

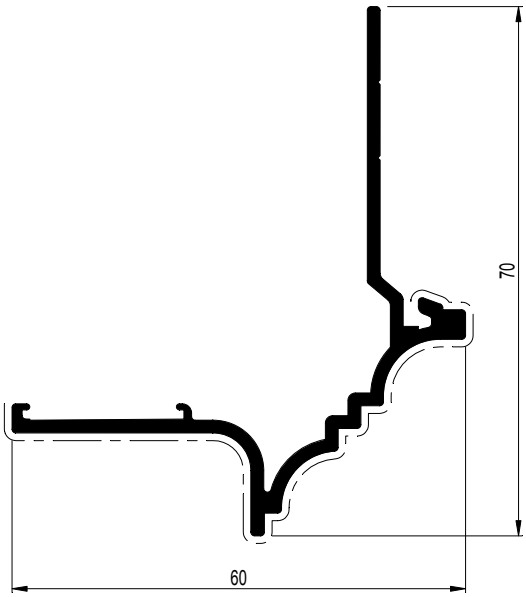

007.0952.XX

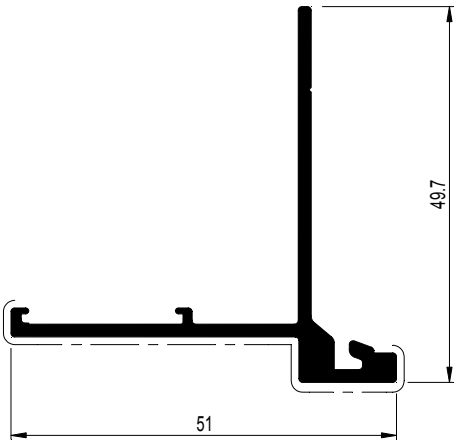

C

D2001547

AFWERKINGSPROFIEL
PROFILE DE FINITION
FINISHING PROFILE
AUSFUEHRUNGSPROFIL

	A dm²/m	P dm²/m	Lm	Ix cm⁴	Wx cm³	ax mm	Iy cm⁴	Wy cm³	ay mm
007.0950.XX	21,05	5,3	7,00	1,331	0,817	16,29	1,530	0,901	13,02

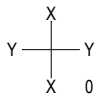

007.0950.XX

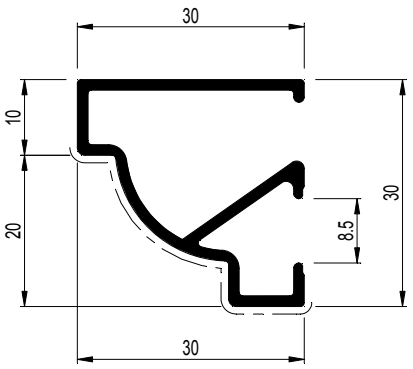

C

D2001548

HULPPROFIEL
PROFILE DE RACCORDEMENT
ADDITIONAL PROFILE
ZUSATZPROFIL

	A dm²/m	P dm²/m	Lm	Ix cm⁴	Wx cm³	ax mm	Iy cm⁴	Wy cm³	ay mm
007.0955.XX	15,17	3,3	6,00	0,178	0,348	4,87	3,123	1,042	24,02
030.1158.XX	29,81	10,5	6,50	0,251	0,349	7,21	28,527	4,686	60,87
030.1159.XX	34,81	13,0	6,50	0,266	0,355	7,49	49,710	6,703	74,16
030.1160.XX	39,81	15,5	6,50	0,278	0,360	7,70	79,505	9,155	86,84

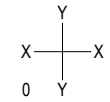

030.1158.XX

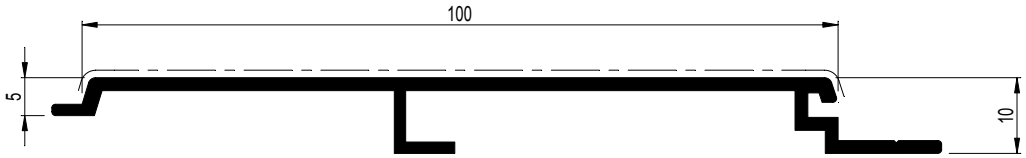

030.1159.XX

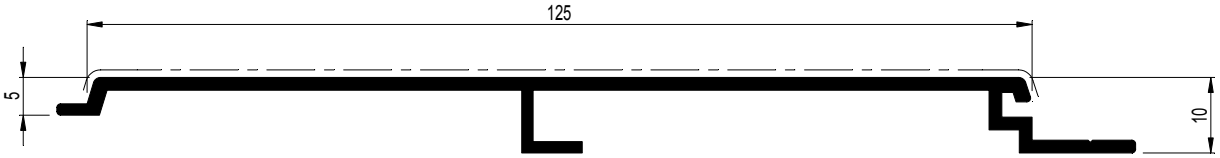

030.1160.XX

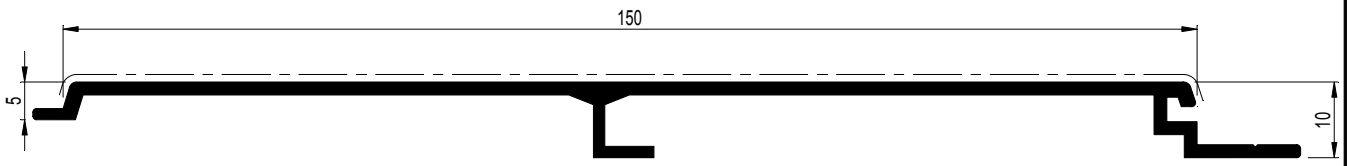

007.0955.XX

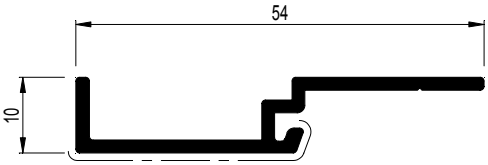

D2001549

CR 120

HULPPROFIEL
PROFILE DE RACCORDEMENT
ADDITIONAL PROFILE
ZUSATZPROFIL

	A dm²/m	P dm²/m	Lm	Ix cm⁴	Wx cm³	ax mm	Iy cm⁴	Wy cm³	ay mm
007.1885.XX	26,94	5,3	7,00	7,307	2,291	18,11	5,057	1,600	15,39
007.1886.XX	31,40	7,7	7,00	9,079	2,564	14,60	16,544	3,459	22,67
0L3.0302.XX	12,00	6,0	6,00	-	-	-	-	-	-

007.1885.XX

25° < α < 45°

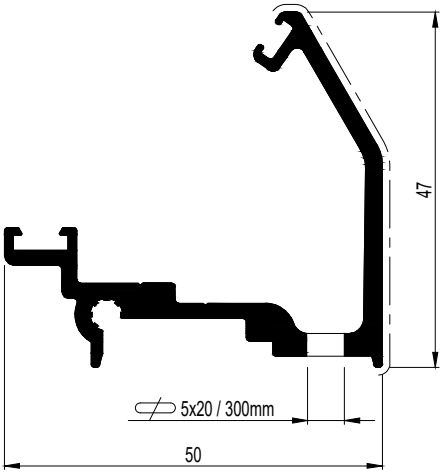

007.1886.XX

5° < α < 25°

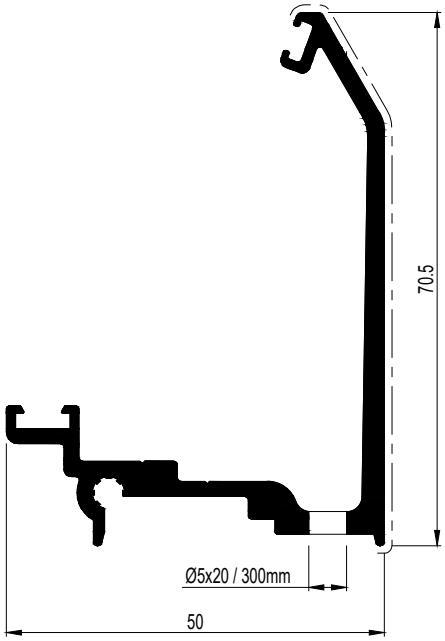

0L3.0302.XX

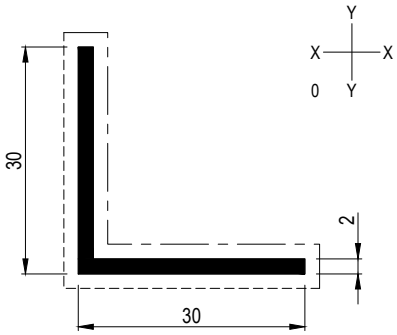

D0070580

C

CR 120

CONDENSATIEPROFIELEN KUNSTSTOF DAKBEDEKKING
OBTURATEURS DE PLAQUE TOITURE SYNTHETIQUE
CONDENSATION PROFILES SYNTHETIC ROOFING
ABSCHLUSSPROFILE DACHDECKUNG IN KUNSTSTOFF

	A dm²/m	P dm²/m	Lm	Ix cm⁴	Wx cm³	ax mm	Iy cm⁴	Wy cm³	ay mm
017.0593.XX	12.72	7.5	6.30	0.493	0.372	13.25	0.226	0.164	10.74
017.0595.XX	15.92	9.1	6.30	1.829	0.832	20.09	0.230	0.163	10.41
017.0596.XX	14.51	8.4	6.30	1.121	0.621	17.03	0.228	0.163	10.53
017.0597.XX	17.51	10.0	6.30	2.904	1.099	23.66	0.232	0.163	10.28
017.0598.XX	20.35	11.5	6.30	6.505	1.929	31.36	0.250	0.174	10.15

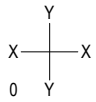

017.0593.XX

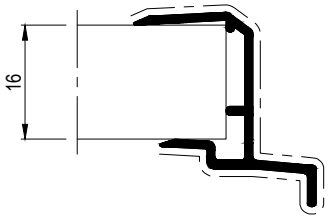

017.0596.XX

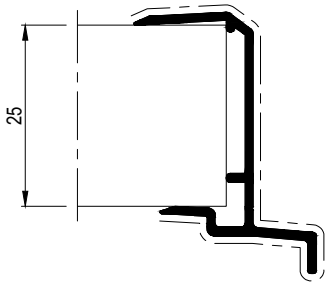

017.0595.XX

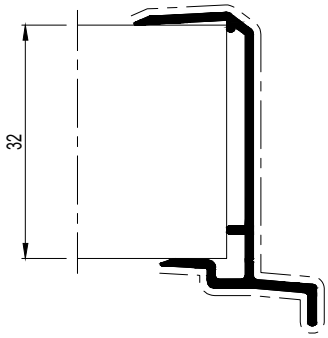

017.0597.XX

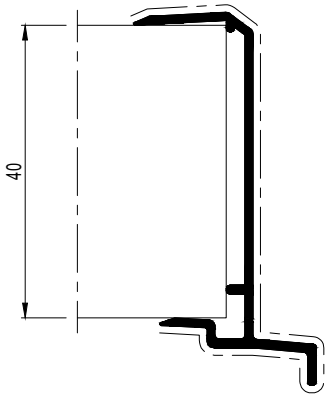

017.0598.XX

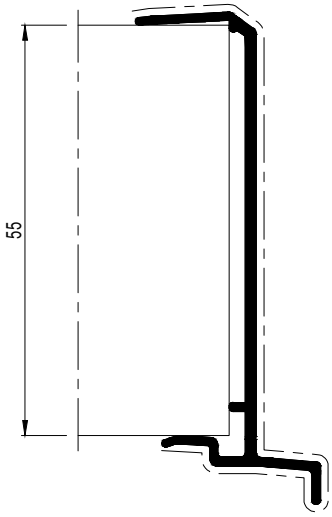

C

D0040867

CR 120

MUURPROFIEL
RACCORD MURAL
WALL SECTION
MAUERPROFIL

	A dm²/m	P dm²/m	Lm	Ix cm⁴	Wx cm³	ax mm	Iy cm⁴	Wy cm³	ay mm
007.0824.XX	48.16	4.9	7.00/5.00/4.00	106.547	15.978	51.95	6.372	2.102	9.68
007.1822.XX	51.81	6.8	7.00/5.00/4.00	152.165	19.547	58.29	11.522	4.210	12.63

007.0824.XX

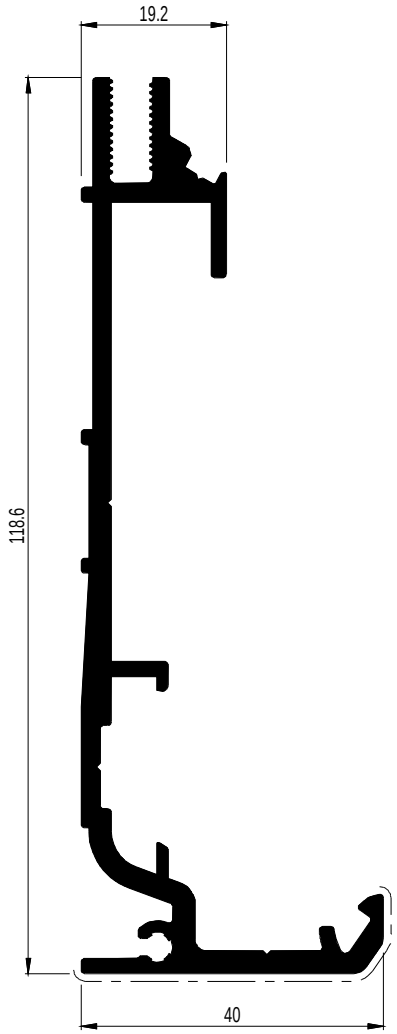

007.1822.XX

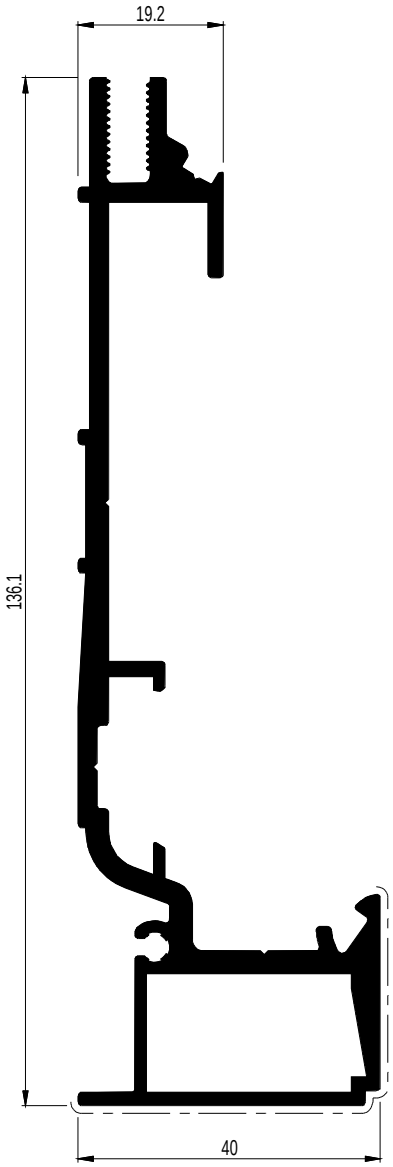

007.0824.XX

$F = \frac{L \cdot A \cdot P}{2}$

F ≤ 900 TYPE 5

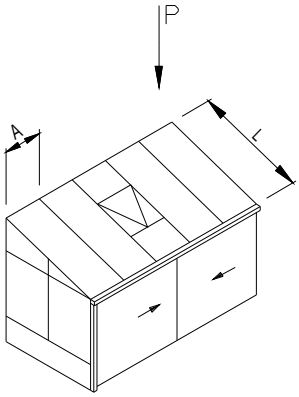

Rekenvoorbeeld
Exemple de calculation
Calculation example
Rechenbeispiel

L=3M
A=1M
P=600Pa

$F = \frac{3 \cdot 1 \cdot 600}{2} = 900$

007.0824.XX	
071.6622.00	---

007.1822.XX	
071.6622.00	---
071.6866.00	097.0523.00

D0070581

C

CR 120

MUURPROFIEL
RACCORD MURAL
WALL SECTION
MAUERPROFIL

	A dm²/m	P dm²/m	Lm	Ix cm⁴	Wx cm³	ax mm	Iy cm⁴	Wy cm³	ay mm
007.0823.XX	27.43	5.8	5.00/7.00	6.316	2.675	23.61	9.952	2.445	18.00
007.1820.XX	45.08	6.3	7.00/5.00/4.00	14.240	3.319	42.91	21.391	5.169	27.31
007.1821.XX	31.36	12.0	7.00	4.193	1.451	22.10	9.518	3.029	23.58

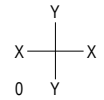

007.1821.XX

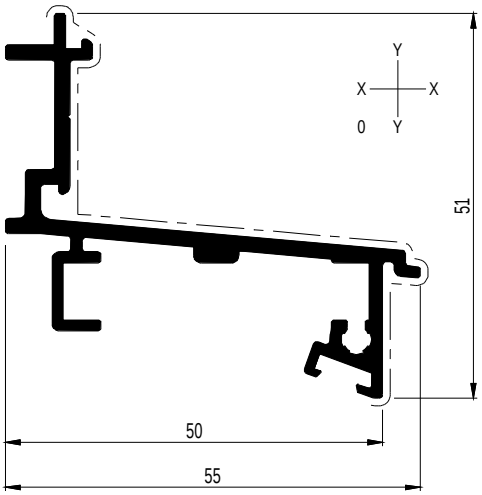

007.1820.XX

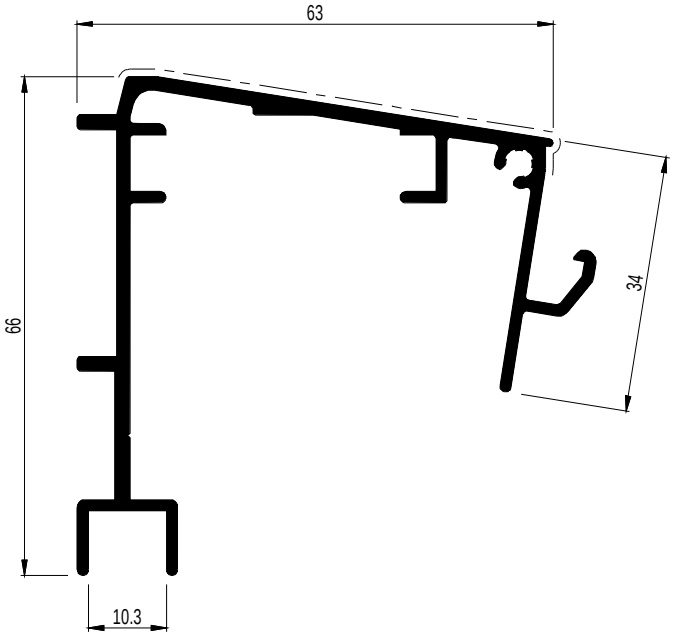

007.0823.XX

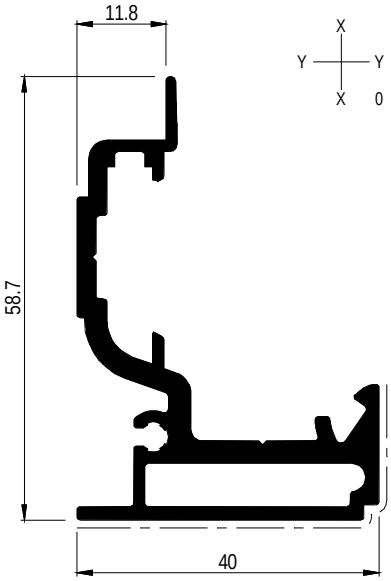

007.0823.XX

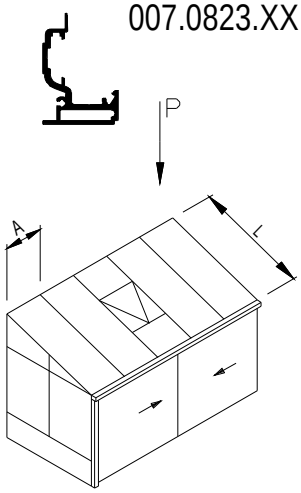

$$F = \frac{L \cdot A \cdot P}{2}$$

F ≤ 900 TYPE 2

F ≤ 1000 TYPE 1

Rekenvoorbeeld
Exemple de calculation
Calculation example
Rechenbeispiel

L=3M
A=1M
P=600Pa

$$F = \frac{3 \cdot 1 \cdot 600}{2} = 900$$

007.0823.XX	---
071.6622.00	

007.1820.XX	---
072.6427.00	

007.1821.XX	---
072.6427.00	

D0040870

C

CR 120

AFSTANDHOUDER BEGLAZING
REDUCTEUR DE FEUILLURE VITRAGE
FILLISTER REDUCER PART GLAZING
NUR FUER GLASBEDACHUNG

	A dm²/m	P dm²/m	Lm	Ix cm⁴	Wx cm³	ax mm	Iy cm⁴	Wy cm³	ay mm
007.0834.XX	19,51	3,2	7,00	0,959	0,570	16,83	0,548	0,358	15,31
007.0835.XX	18,05	3,3	7,00	0,901	0,538	13,76	0,407	0,345	11,80

X Y Y X 0

007.0834.XX

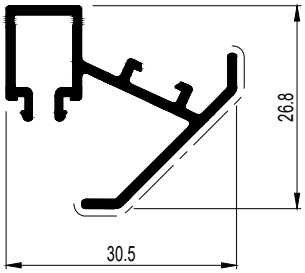

007.0835.XX

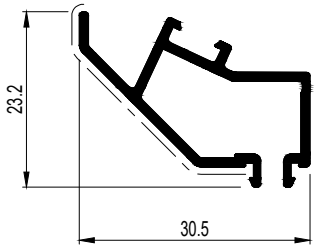

C

D0069788

CR 120

AFDEKPROFIEL
PROFILE DE RECOUVREMENT
COVERING PROFILE
ABDECKPROFIL

	A dm²/m	P dm²/m	Lm	Ix cm⁴	Wx cm³	ax mm	Iy cm⁴	Wy cm³	ay mm
007.0888.XX	9.22	4.2	7.00	0.096	0.110	6.40	0.422	0.327	12.21

007.0888.XX

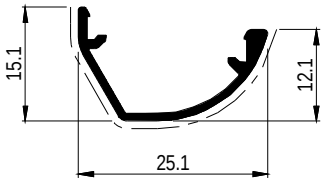

C

D0040872

CR 120

STEUNPROFIEL
PROFILE DE SUPPORT
RAFTER HOLDER
SPARRENAUFLAGEPROFIL

	A dm²/m	P dm²/m	Lm	Ix cm⁴	Wx cm³	ax mm	Iy cm⁴	Wy cm³	ay mm
007.0854.XX	26,82	9,3	5,00	37,389	7,490	42,88	4,409	1,914	12,46
007.0881.XX	35,12	11,7	5,00/7,00	77,635	13,535	57,36	5,459	2,325	12,02

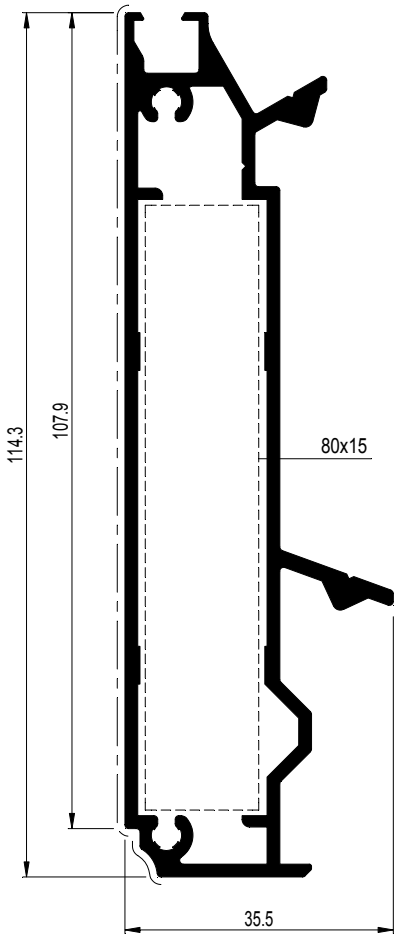

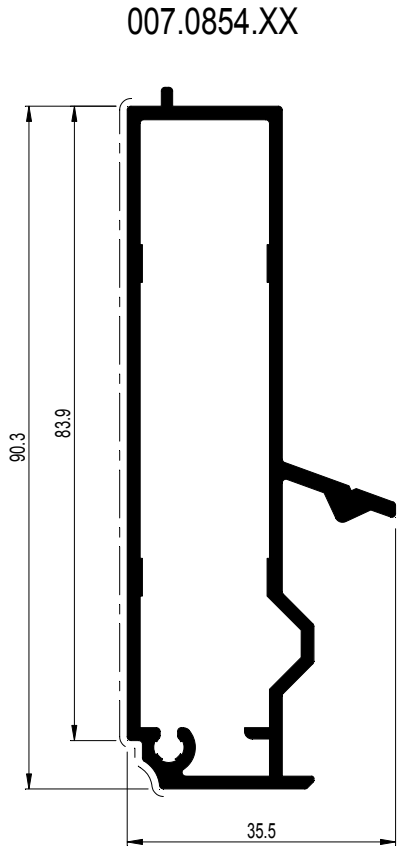

007.0881.XX + St 80x15 : Ix = 269.6 cm⁴

007.0854.XX + St 80x15 : Ix = 229.353 cm⁴

D0069789

CR 120

NOKPROFIEL
PROFILE FAITIERE
RIDGE PROFILE
FIRSTPROFIL

	A dm²/m	P dm²/m	Lm	Ix cm⁴	Wx cm³	ax mm	Iy cm⁴	Wy cm³	ay mm
007.0838.00	-	-	7,00	6,183	2,056	29,78	1,163	1,344	8,65
007.0850.XX	52,74	35,6	7,00/4,00	242,557	34,769	69,76	106,180	26,545	40,00
007.1851.XX	49,21	21,2	7,00/4,00	1,656	1,015	16,32	142,320	17,790	80,00

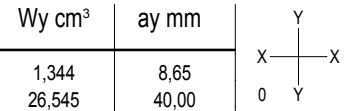

007.0850.XX

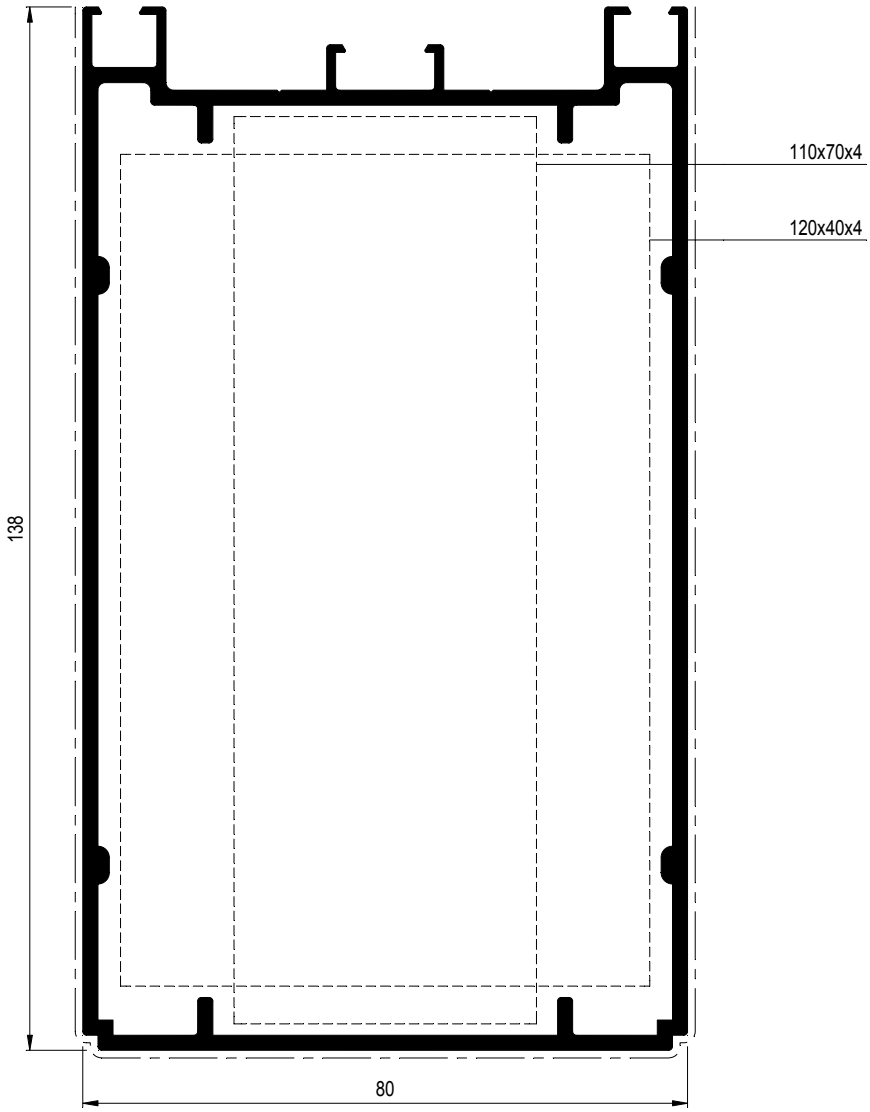

007.0838.00

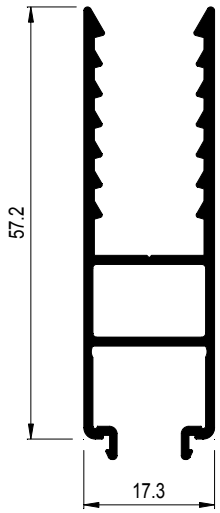

007.1851.XX

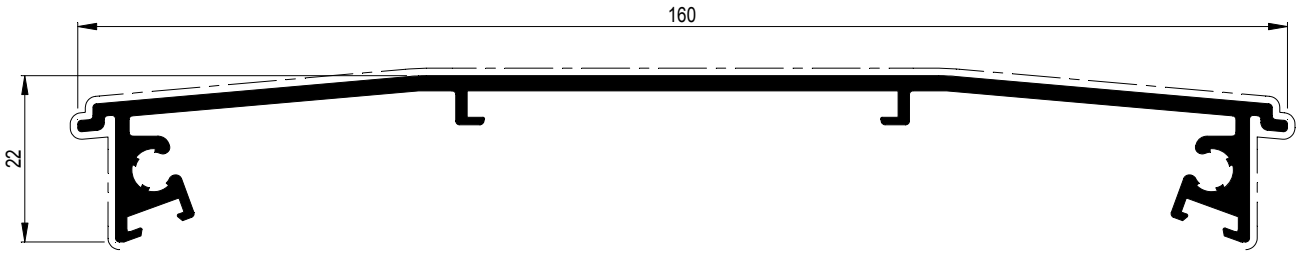

007.0850.XX	
071.6785.00	---

D0069790

C

CR 120

OPZETPROFIEL
PROFILE AUXILIAIRE
AUXILIARY PROFILE
ZUSATZPROFIL

	A dm²/m	P dm²/m	Lm	Ix cm⁴	Wx cm³	ax mm	Iy cm⁴	Wy cm³	ay mm
034.0010.XX	30,92	15,7	7,00	2,255	0,857	26,30	30,850	6,418	48,03
034.0035.XX	16,16	7,9	7,00	-	-	-	-	-	-
064.0525.00	-	-	1,00	-	-	-	-	-	-

034.0010.XX

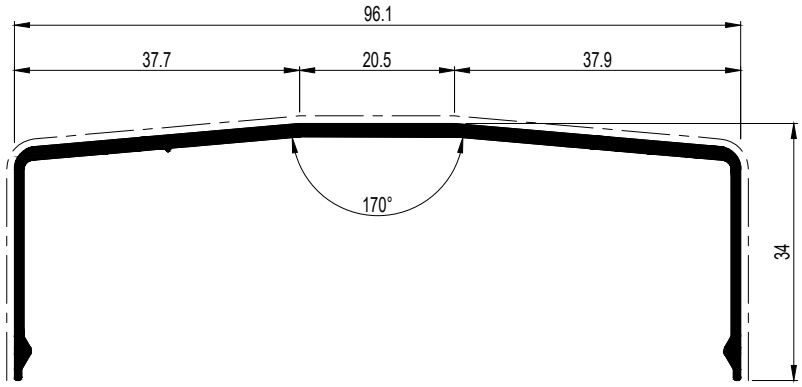

034.0035.XX

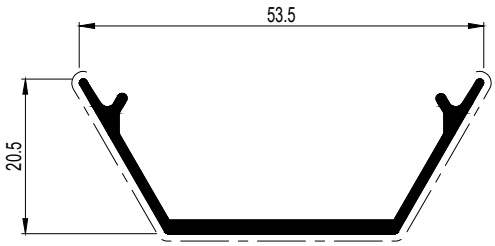

064.0525.00

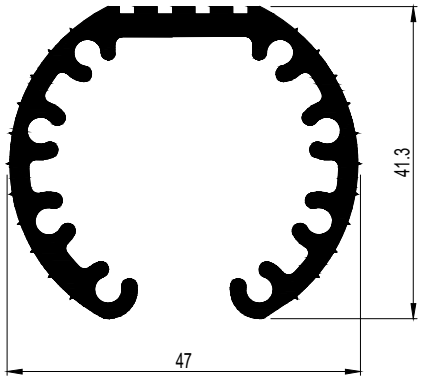

D0069792

OPZETPROFIEL
PROFILE AUXILIAIRE
AUXILIARY PROFILE
ZUSATZPROFIL

	A dm²/m	P dm²/m	Lm	Ix cm⁴	Wx cm³	ax mm	Iy cm⁴	Wy cm³	ay mm
034.1011.00	-	-	7,00	-	-	-	-	-	-
034.1013.00	-	-	7,00	-	-	-	-	-	-
034.1036.00	-	-	7,00	-	-	-	-	-	-
034.1038.00	-	-	7,00	-	-	-	-	-	-

034.1011.00

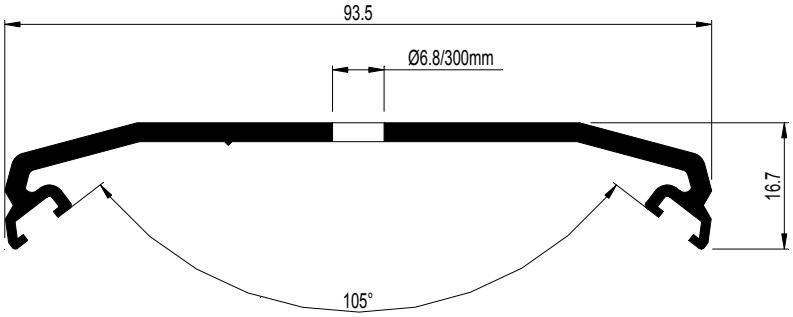

034.1013.00

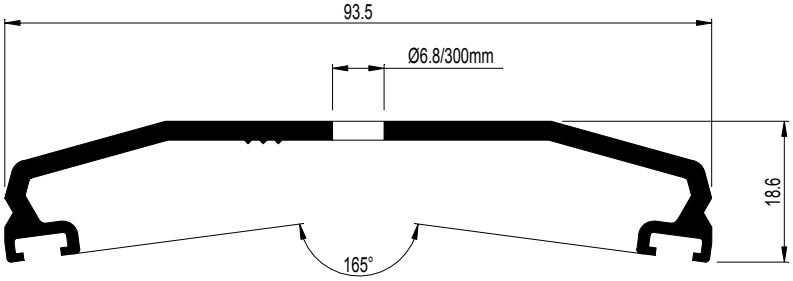

034.1036.00

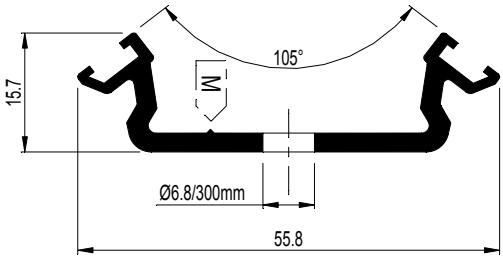

034.1038.00

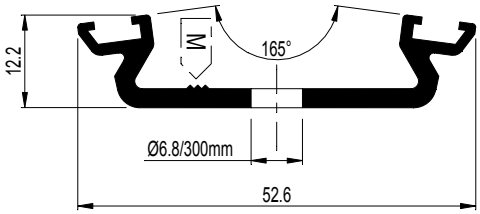

C

D0069791

CR 120

DWARSPROFIEL
TRAVERSE
TRANSOM
RIEGELPROFIL

	A dm²/m	P dm²/m	Lm	Ix cm⁴	Wx cm³	ax mm	Iy cm⁴	Wy cm³	ay mm
007.0568.XX	25,53	7,1	7,00	0,936	0,612	5,51	5,931	1,969	30,11
034.0668.XX	29,17	10,0	7,00	3,904	1,842	13,81	13,482	4,465	30,19
0M0.4008.XX	9,60	9,6	6,00	0,171	0,427	4,00	4,267	2,133	20,00
0M0.6003.XX	12,60	6,6	6,00	0,014	0,090	1,50	5,400	1,800	30,00

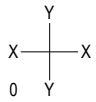

0M0.6003.XX

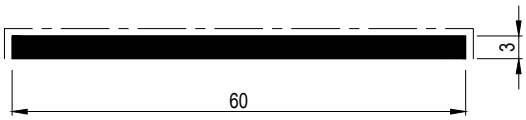

0M0.4008.XX

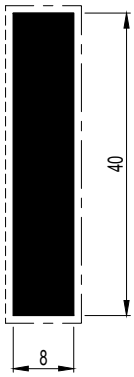

007.0568.XX

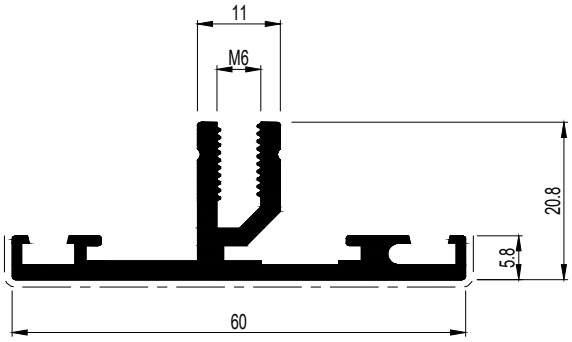

034.0668.XX

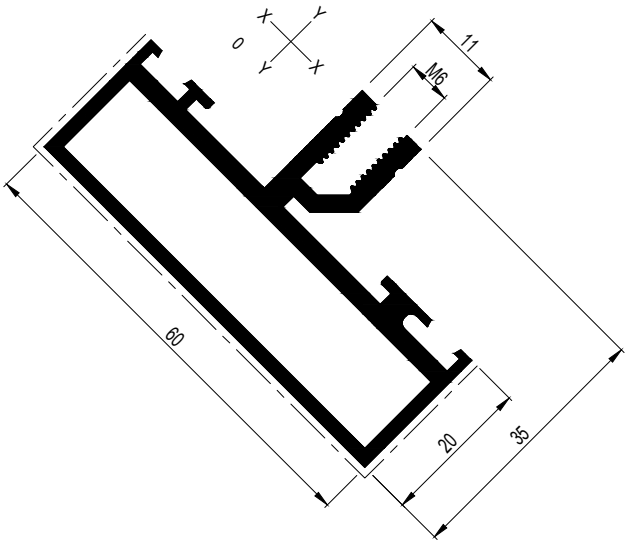

D0040878

C

DWARSPROFIEL
TRAVERSE
TRANSOM
RIEGELPROFIL

	A dm²/m	P dm²/m	Lm	Ix cm⁴	Wx cm³	ax mm	Iy cm⁴	Wy cm³	ay mm
034.0070.04	-	-	7.00	-	-	-	-	-	-
034.0071.04	-	-	7.00	-	-	-	-	-	-
034.0072.04	-	-	7.00	-	-	-	-	-	-
034.0073.04	-	-	7.00	-	-	-	-	-	-
034.0074.04	-	-	7.00	-	-	-	-	-	-
034.0075.04	-	-	7.00	-	-	-	-	-	-
034.0076.04	-	-	7.00	-	-	-	-	-	-

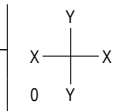

034.0070.04

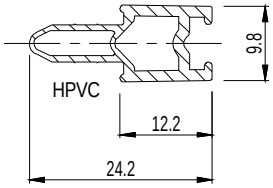

034.0074.04

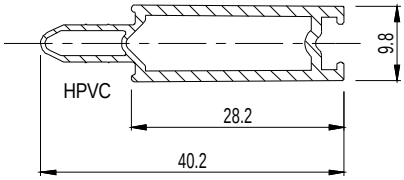

034.0071.04

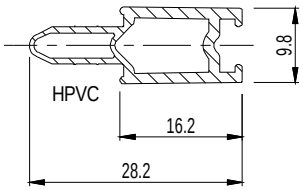

034.0075.04

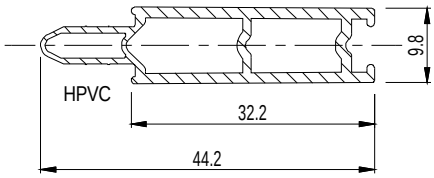

034.0072.04

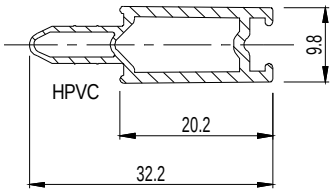

034.0076.04

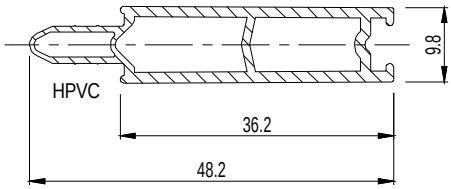

034.0073.04

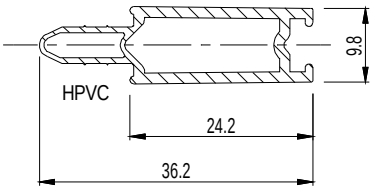

C

D069504

CR 120

GLASSTEUN
SUPPORT CALE DE VITRAGE
GLASS SUPPORT
GLASAUFLAGEPROFIL

	A dm²/m	P dm²/m	Lm	Ix cm⁴	Wx cm³	ax mm	Iy cm⁴	Wy cm³	ay mm
034.0690.00	-	-	6.00	-	-	-	-	-	-

034.0690.00

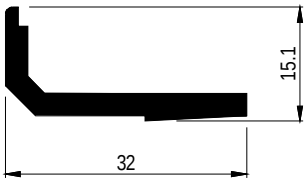

GLASDIKTE 26 -32mm
EPAISSEUR DE VITRAGE 26 - 32mm
GLAZING THICKNESS 26 - 32mm
GLASDICKE 26 - 32mm

C

D0040879

	A dm²/m	P dm²/m	Lm	Ix cm⁴	Wx cm³	ax mm	Iy cm⁴	Wy cm³	ay mm
007.0765.XX	40,78	16,4	7,00/5,00	25,465	4,576	28,85	32,272	7,469	37,59
007.0766.XX	22,47	6,6	7,00/5,00	0,132	0,145	2,34	13,188	3,125	42,20
007.0767.01	-	-	7,00	-	-	-	-	-	-

X Y Y X 0

007.0765.XX

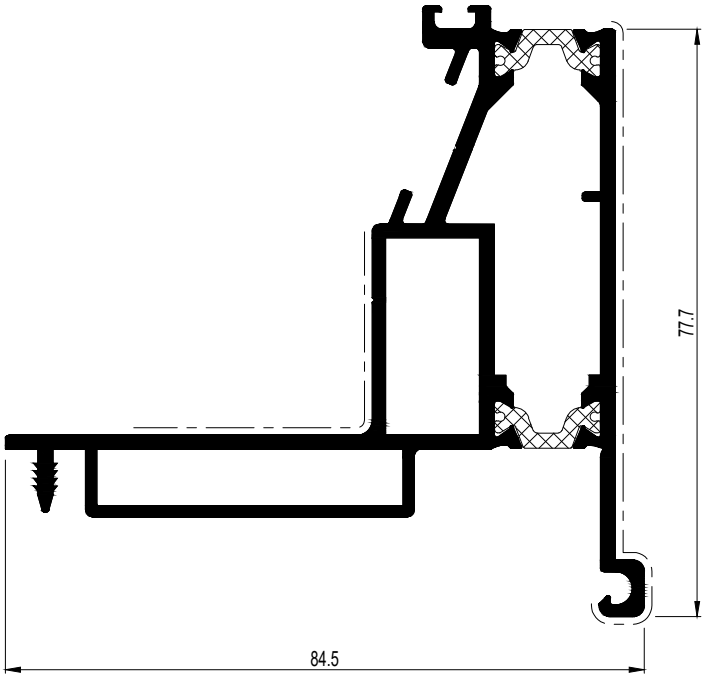

007.0767.01

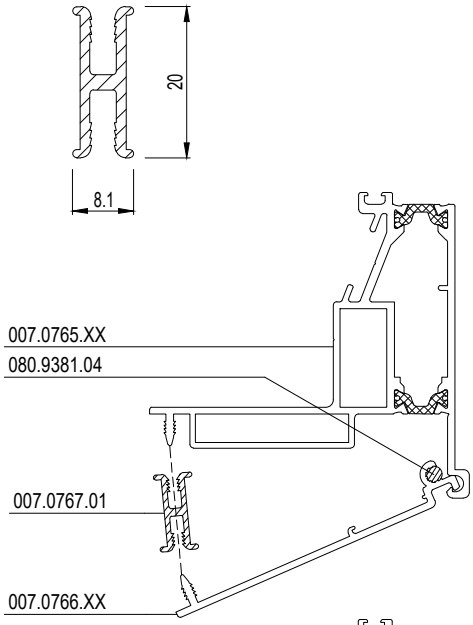

007.0766.XX

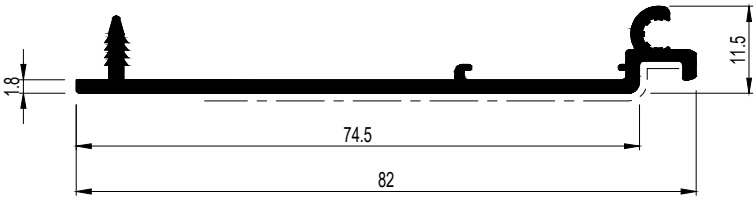

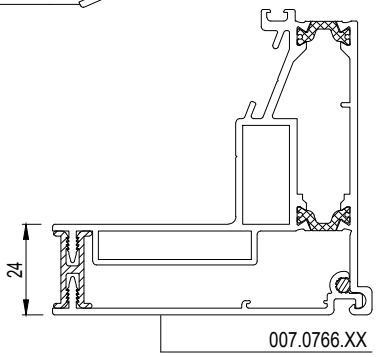

007.0765.XX	
068.8810.00	095.H800.00 of-ou-or-oder 095.B500.00
068.6039.00	---
068.8861.00	---
072.6427.00 068.8876.00	097.0429.00
069.6628.04	---

007.0766.XX	
060.8723.-- 060.8746.00	---

C

D0040923

DAKRAAM
TABATIERE
ATTIC WINDOW
DACHFENSTER

Reynaers Aluminium

	A dm²/m	P dm²/m	Lm	Ix cm⁴	Wx cm³	ax mm	Iy cm⁴	Wy cm³	ay mm
007.0768.XX	27,56	5,5	7,00/5,00	9,747	2,388	40,81	10,227	3,068	20,16
007.0769.XX	18,82	9,6	7,00/5,00	2,827	0,969	29,19	4,266	1,111	15,10
007.0770.XX	20,82	10,6	7,00/5,00	5,429	1,569	34,60	4,647	1,182	14,20

007.0768.XX

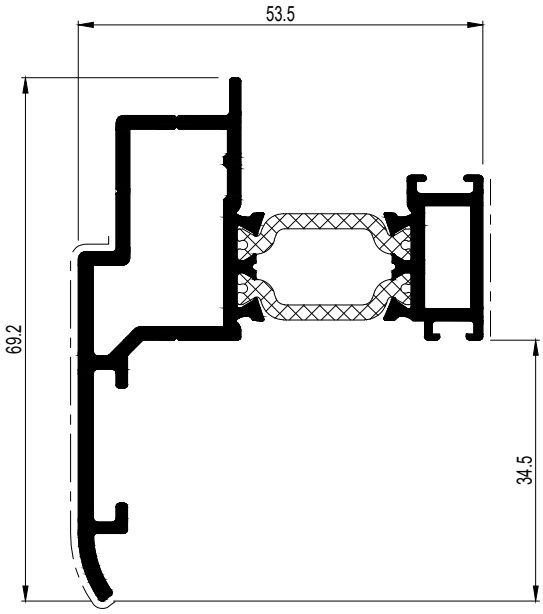

007.0769.XX

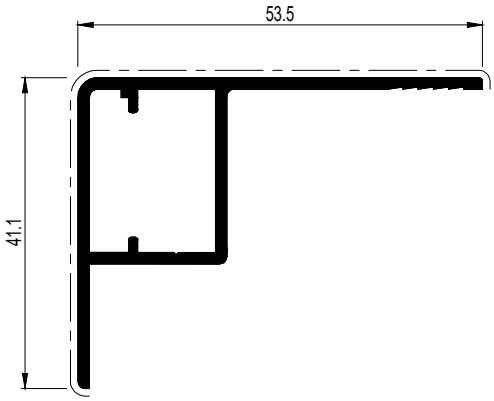

007.0770.XX

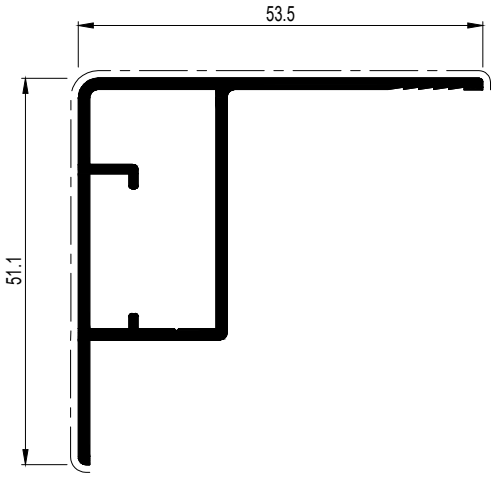

Glaslat / Parclose / Glazing bead / Glasleiste	Beglazingsrubber binnen / Joint de vitrage intérieur / Glazing gasket inside / Verglasungsdichtung innen	Glasdikte / Epaisseur de vitrage / Glazing thickness / Glasdicke	Beglazingsrubber buiten / Joint de vitrage extérieur / Glazing gasket outside / Verglasungsdichtung außen
007.0769.XX	080.9544.04	17 18	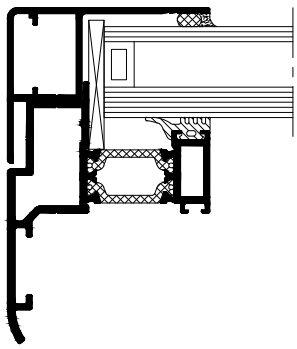
	080.9543.04	19 20 21	
	080.9542.04	22	
	080.9540.04	23 24	
007.0770.XX	080.9544.04	25 26 27 28	
	080.9543.04	29 30 31	
	080.9542.04	32	
	080.9540.04	33 34	

007.0768.XX	
068.8810.00	095.H800.00 of-ou-or-oder 095.B500.00
068.6039.00	---
068.8861.00	---
068.8876.00	097.0429.00

007.0769.XX	
072.6395.04	---

007.0770.XX	
072.6395.04	---

D0004361

HOEKPROFIELEN EN MIDDENSTEUN
PROFILES D'ANGLE ET SUPPORT CENTRAL
CORNER PROFILES AND CENTRAL SUPPORT
ECKPROFILE UND MITTELSTUETZE

	A dm²/m	P dm²/m	Lm	Ix cm⁴	Wx cm³	ax mm	Iy cm⁴	Wy cm³	ay mm
007.1870.XX	50.62	17.1	5.00/3.00	23.861	6.204	38.46	151.247	25.401	59.54
007.0871.XX	47.91	17.1	5.00/3.00	30.223	7.643	39.54	129.311	23.511	55.00

007.1870.XX

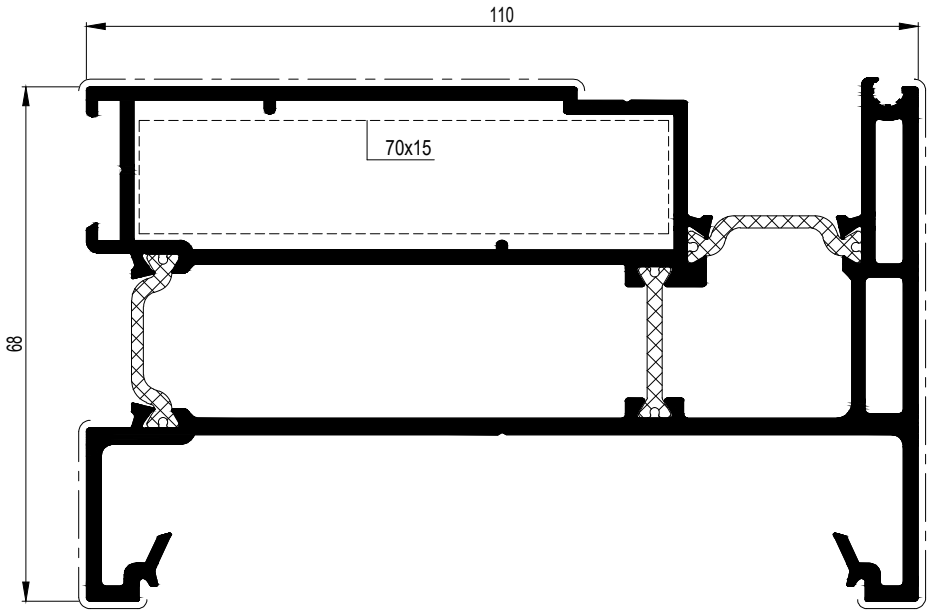

007.0871.XX

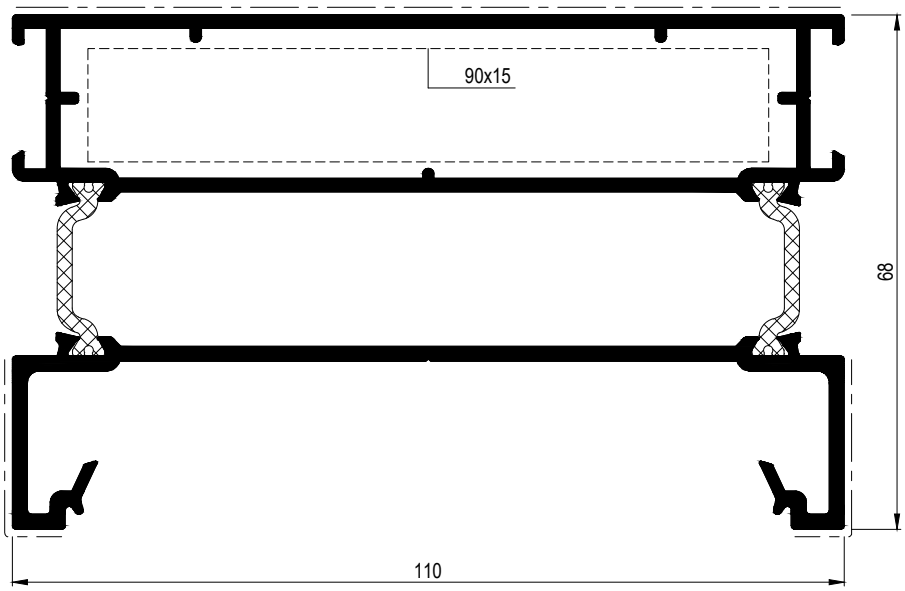

007.1870.XX	
071.6799.00	---

007.0871.XX	
071.6798.00	---

D0004353

CR 120

HOEKPROFIEL
PROFILE D'ANGLE
CORNER PROFILE
ECKPROFIL

	A dm²/m	P dm²/m	Lm	Ix cm⁴	Wx cm³	ax mm	Iy cm⁴	Wy cm³	ay mm
007.1550.XX	51.56	16.5	5.00/3.00	25.226	7.386	33.84	151.933	26.106	58.20

X
Y — Y
X 0

007.1550.XX

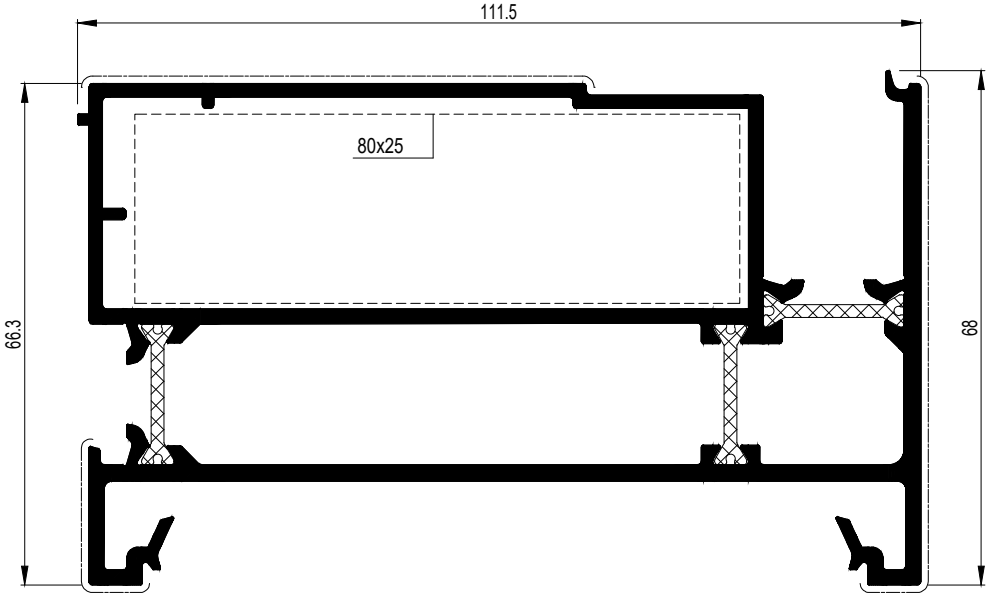

007.1550.XX	
071.6886.00	097.0344.00

D3002161

C

CR 120

HOEKPROFIEL EN MIDDENSTEUN
PROFILE D'ANGLE ET SUPPORT CENTRAL
CORNER PROFILE AND CENTRAL SUPPORT
ECKPROFIL UND MITTELSTUETZE

	A dm²/m	P dm²/m	Lm	Ix cm⁴	Wx cm³	ax mm	Iy cm⁴	Wy cm³	ay mm
007.0904.XX	47,85	22,1	7,00	140,251	24,262	57,81	169,502	30,819	55,00
007.0905.XX	53,43	12,6	5,00/4,00/3,00	26,612	7,722	34,46	96,386	14,991	64,30
007.1906.XX	25,89	4,6	5,00/3,00	4,986	1,696	29,40	2,173	0,902	11,91

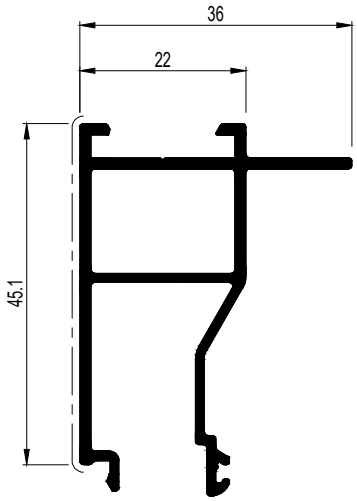

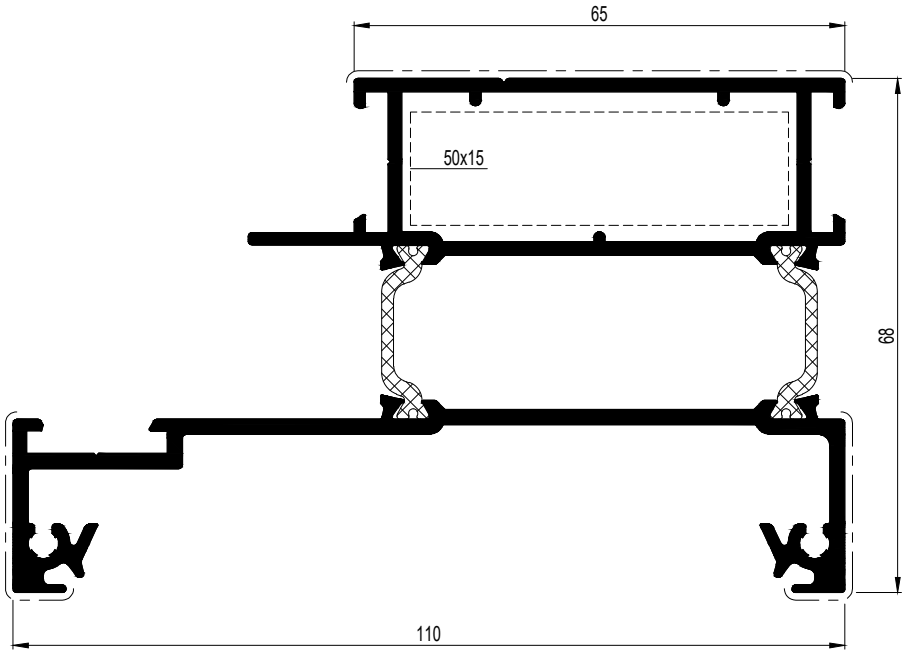

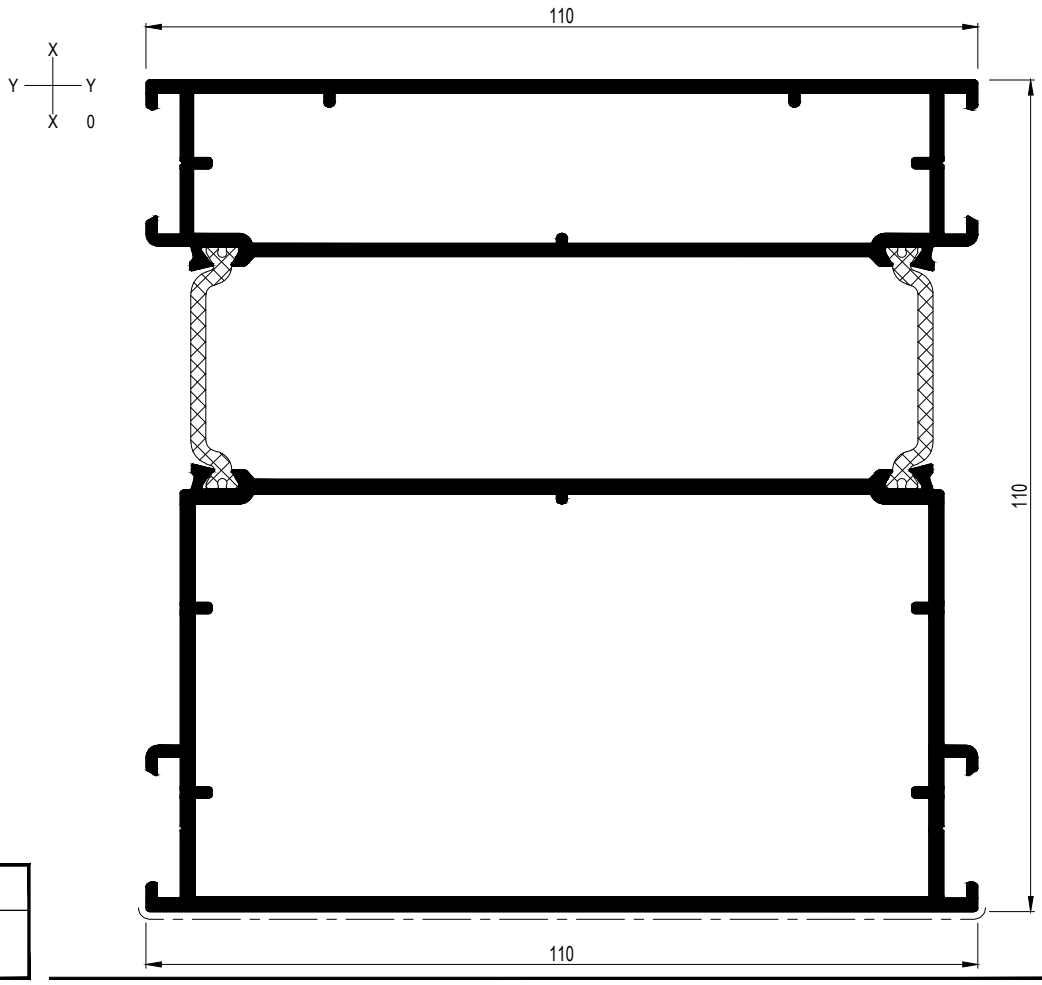

007.0905.XX	
071.6784.00	---

D0040926

C

CR 120

AFDEKPROFIEL
PROFILE DE RECOUVREMENT
COVERING PROFILE
ABDECKPROFIL

	A dm²/m	P dm²/m	Lm	Ix cm⁴	Wx cm³	ax mm	Iy cm⁴	Wy cm³	ay mm
007.0552.XX	68,90	31,8	5,00	95,689	13,353	37,08	150,518	27,367	55,00
007.0845.XX	71,95	33,4	5,00/4,00/3,00	106,879	14,535	42,31	155,322	28,240	55,00

X Y Y X 0

007.0552.XX

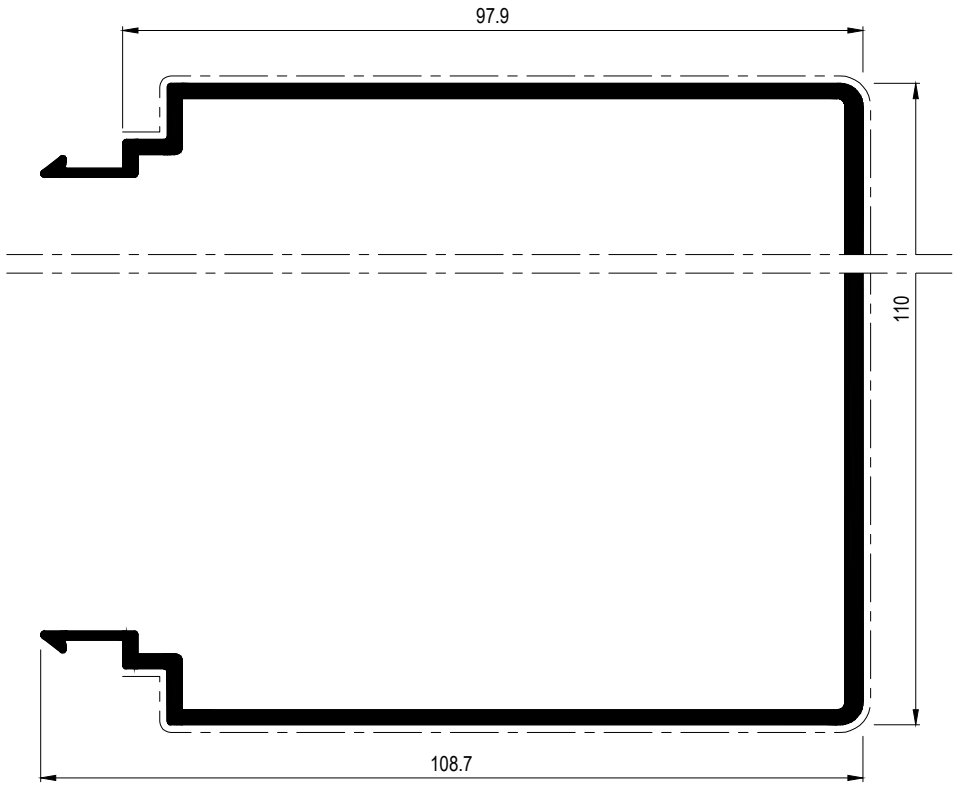

007.0845.XX

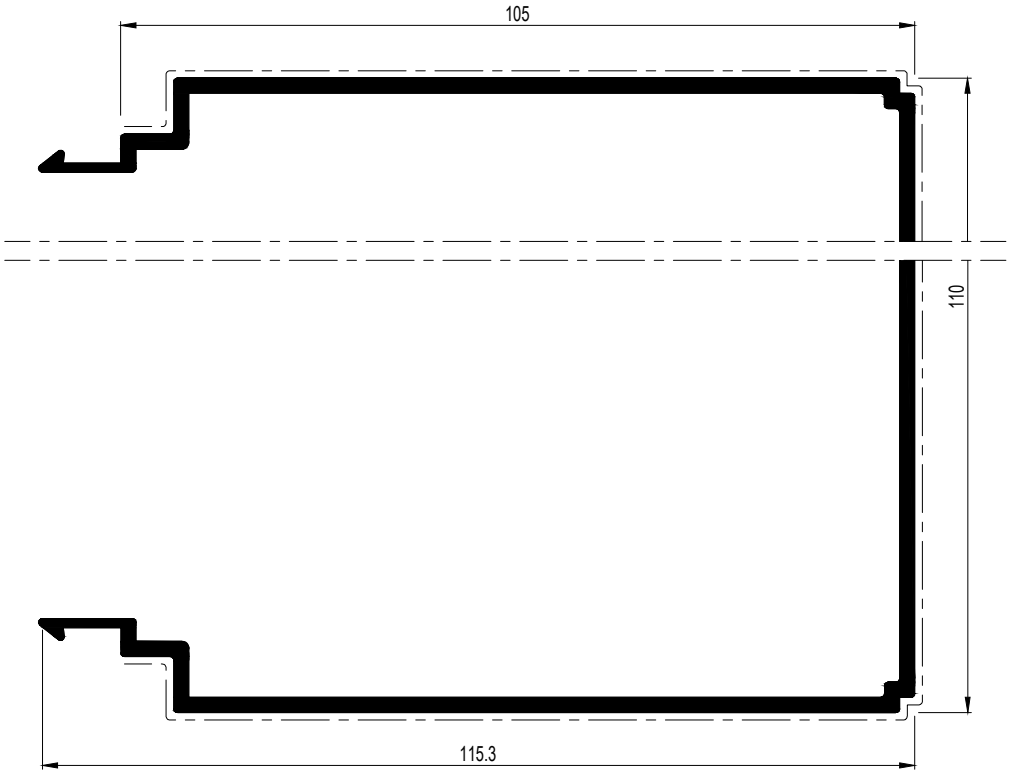

D0040934

C

CR 120

AFDEKPROFIEL
PROFILE DE RECOUVREMENT
COVERING PROFILE
ABDECKPROFIL

	A dm²/m	P dm²/m	Lm	Ix cm⁴	Wx cm³	ax mm	Iy cm⁴	Wy cm³	ay mm
043.1010.XX	23.80	9.5	6.00	0.143	0.132	1.87	19.126	4.017	47.60

X
Y Y
X 0

043.1010.XX

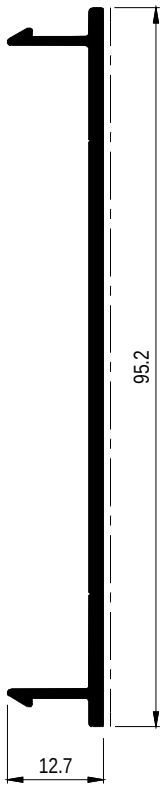

C

D0069506

CR 120

AFDEKPROFIEL
PROFILE DE RECOUVREMENT
COVERING PROFILE
ABDECKPROFIL

	A dm²/m	P dm²/m	Lm	Ix cm⁴	Wx cm³	ax mm	Iy cm⁴	Wy cm³	ay mm
007.0847.XX	70,24	32,4	5,00/3,00	102,559	14,198	43,61	147,804	26,873	55,00
043.1015.XX	46,69	20,4	6,00	12,570	3,485	36,07	72,420	14,481	50,01

007.0847.XX

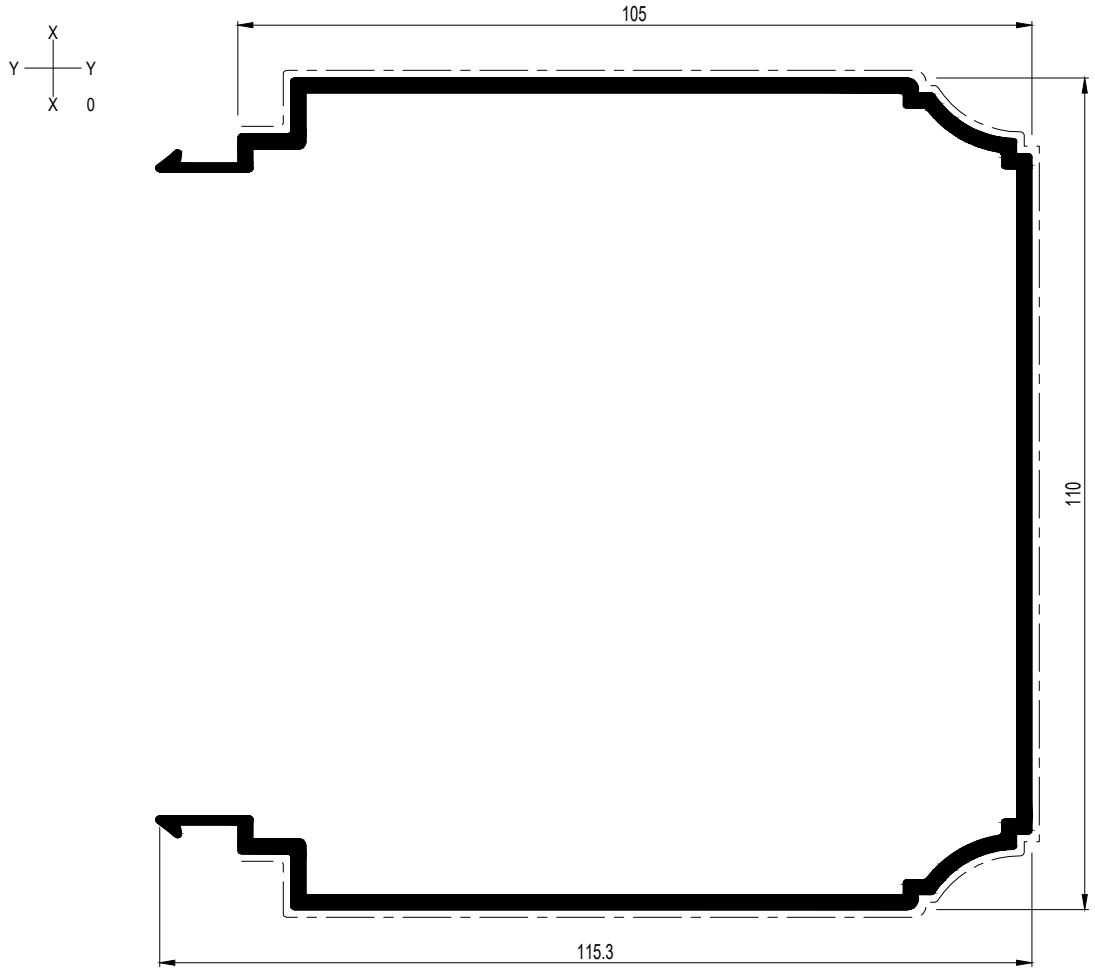

043.1015.XX

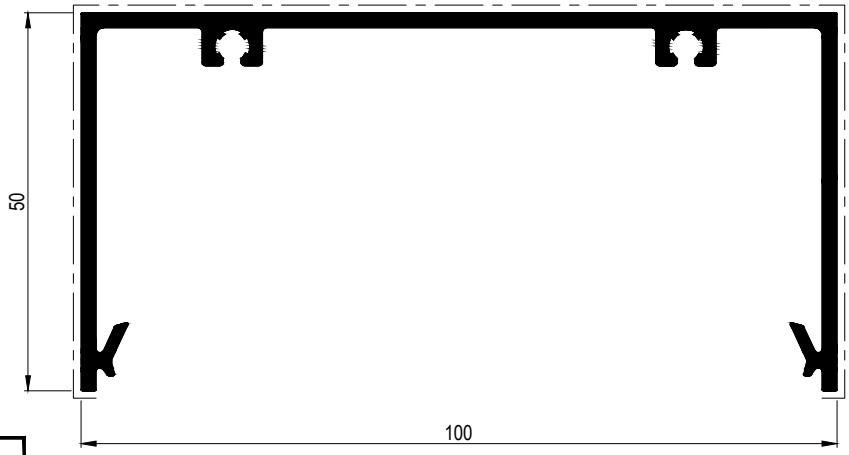

043.1015.XX	
052.5301.-- (2x)	097.0173.00

D0040936

C

CR 120

HOEKPROFIEL
PROFILE D'ANGLE
CORNER PROFILE
ECKPROFIL

	A dm²/m	P dm²/m	Lm	Ix cm⁴	Wx cm³	ax mm	Iy cm⁴	Wy cm³	ay mm
007.0865.XX	52.39	17.8	7.00	65.978	10.535	51.37	53.178	7.608	26.62

90° - 137°

007.0865.XX

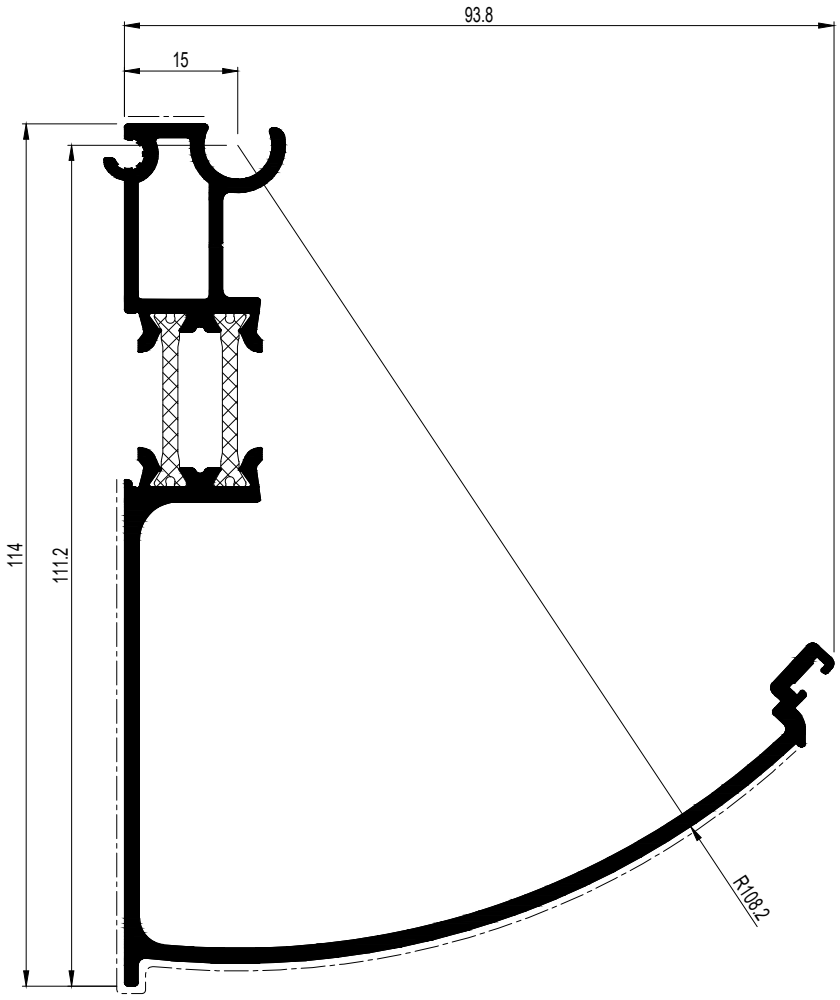

C

D0022631

CR 120

HOEKPROFIEL
PROFILE D'ANGLE
CORNER PROFILE
ECKPROFIL

	A dm²/m	P dm²/m	Lm	Ix cm⁴	Wx cm³	ax mm	Iy cm⁴	Wy cm³	ay mm
007.0866.XX	52.48	20.0	7.00	73.806	11.584	51.16	50.795	6.636	76.54

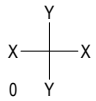

007.0866.XX

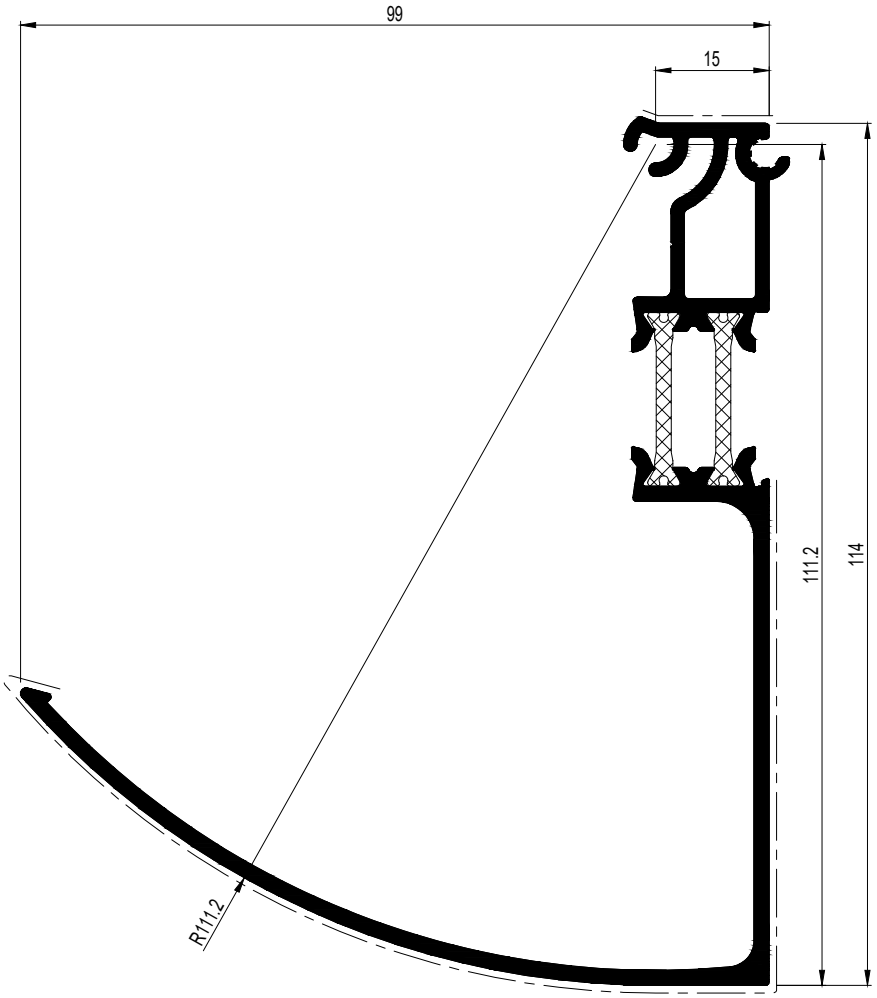

D0022836

C

CR 120

AFDEKPROFIEL
PROFILE DE RECOUVREMENT
COVERING PROFILE
ABDECKPROFIL

	A dm²/m	P dm²/m	Lm	Ix cm⁴	Wx cm³	ax mm	Iy cm⁴	Wy cm³	ay mm	
007.0837.XX	19,17	6,1	7,00	0,430	0,298	14,42	3,001	1,477	20,05	X Y Y X 0

007.0837.XX

C

D2001214

CR 120

KOPPELPROFIEL
PROFILE DE RACCORDEMENT
CONNECTION PROFILE
KUPPLUNGSPROFIL

	A dm²/m	P dm²/m	Lm	Ix cm⁴	Wx cm³	ax mm	Iy cm⁴	Wy cm³	ay mm
007.0907.00	-	-	7,00	37,327	6,818	54,75	0,231	0,197	11,67

X
Y Y
X 0

007.0907.00

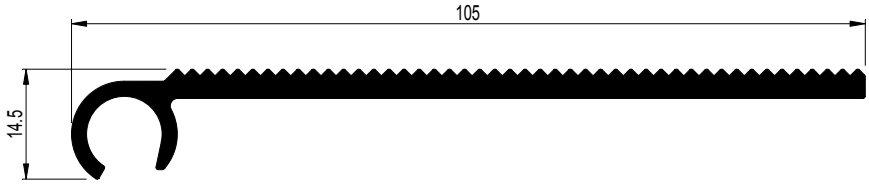

C

D2001215

CR 120

VERBINDINGS- EN DILATATIEPROFIEL
PROFILE DE RACCORDEMENT ET DILATATION
CONNECTION AND EXPANSION PROFILE
VERBUND- UND AUSDEHNUNGSPROFIL

	A dm²/m	P dm²/m	Lm	Ix cm⁴	Wx cm³	ax mm	Iy cm⁴	Wy cm³	ay mm
022.0235.XX	10.42	4.1	6.00	0.470	0.285	11.14	0.389	0.257	15.13

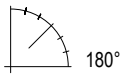

022.0235.XX

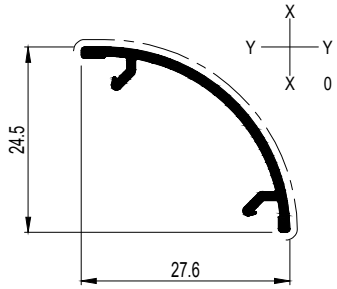

C

D0027591

HULPPROFIELEN
PROFILES DE RACCORDEMENT
ADDITIONAL PROFILES
ZUSATZPROFILE

	A dm²/m	P dm²/m	Lm	Ix cm⁴	Wx cm³	ax mm	Iy cm⁴	Wy cm³	ay mm
007.0819.XX	20.99	8.0	7.00	0.110	0.148	2.58	6.924	2.308	30.00
007.1571.XX	28.27	13.4	7.00	11.074	2.618	31.07	1.719	0.729	23.59
021.4533.XX	20.10	7.6	7.00	0.082	0.144	5.70	5.720	1.906	30.00
021.4534.XX	24.01	7.6	7.00	0.212	0.200	3.41	5.676	1.892	30.00

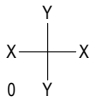

021.4533.XX

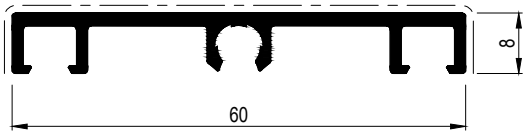

021.4534.XX

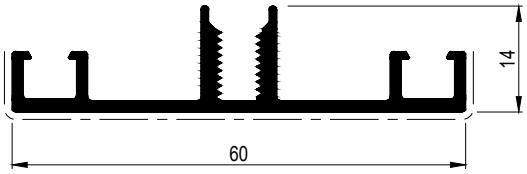

007.0819.XX

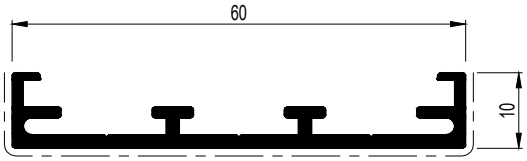

007.1571.XX

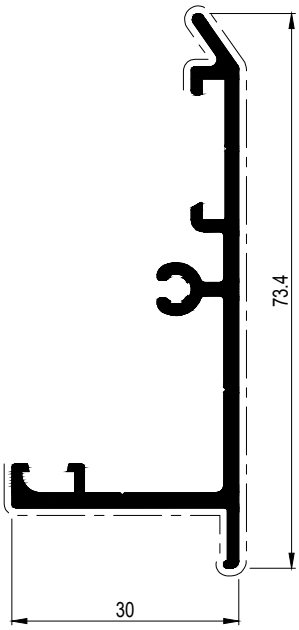

C

D0004213

	A dm²/m	P dm²/m	Lm	Ix cm⁴	Wx cm³	ax mm	Iy cm⁴	Wy cm³	ay mm
007.0562.PA	15,43	7,9	7,00	-	-	-	-	-	-
007.0563.PA	27,43	13,9	7,00	-	-	-	-	-	-
007.0564.PA	39,43	19,9	7,00	-	-	-	-	-	-
0B0.5401.XX	16,97	17,0	6,00	8,530	3,159	27,00	8,530	3,159	27,00

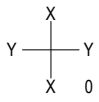

007.0562.PA

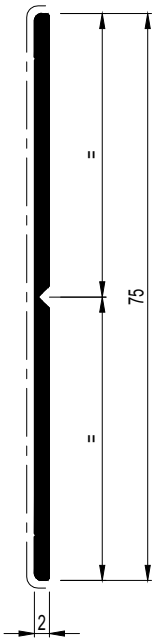

007.0563.PA

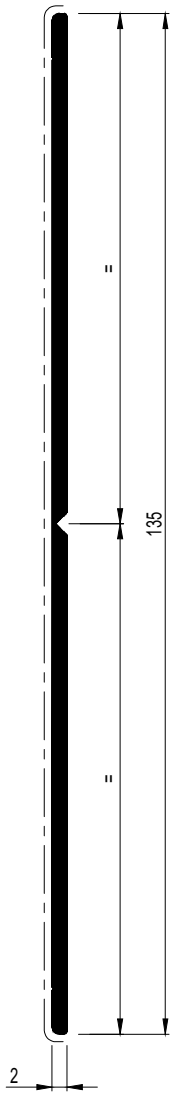

007.0564.PA

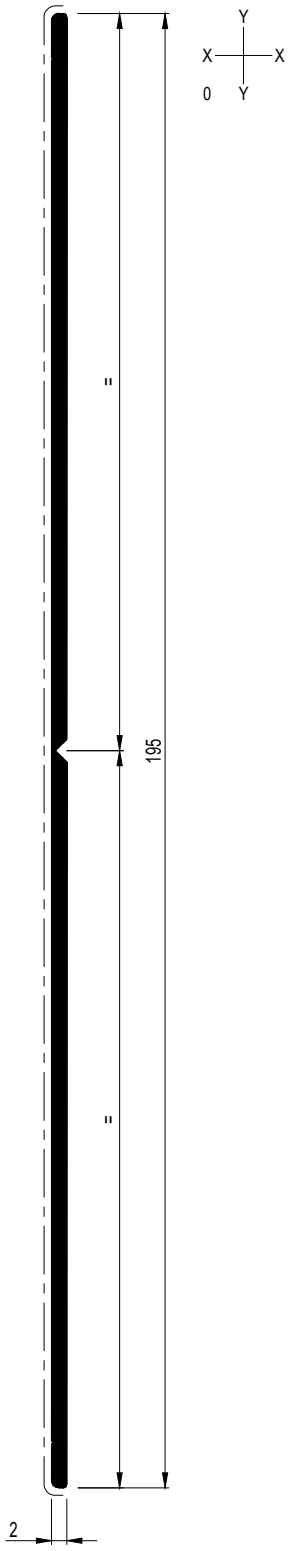

0B0.5401.XX

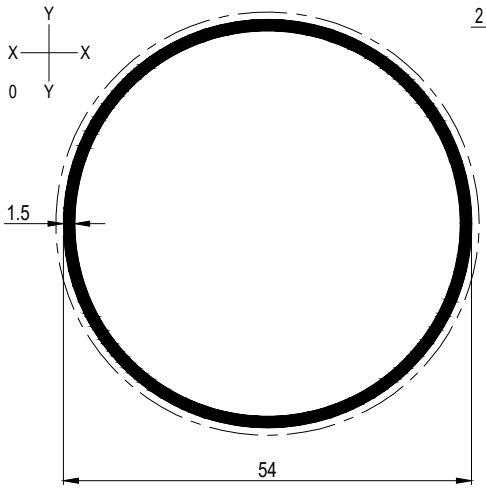

D0040964

CR 120

HULPPROFIEL
PROFILE DE RACCORDEMENT
ADDITIONAL PROFILE
ZUSATZPROFIL

	A dm²/m	P dm²/m	Lm	Ix cm⁴	Wx cm³	ax mm	Iy cm⁴	Wy cm³	ay mm
0A1.2033.XX	30.00	30.0	6.00	135.691	22.615	60.00	13.867	9.245	15.00
0L4.0202.XX	12.00	6.0	6.00	1.964	0.758	14.10	0.348	0.219	4.10
0L5.0253.XX	15.00	7.5	6.00	5.661	1.759	17.82	0.994	0.505	5.32

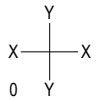

0L4.0202.XX

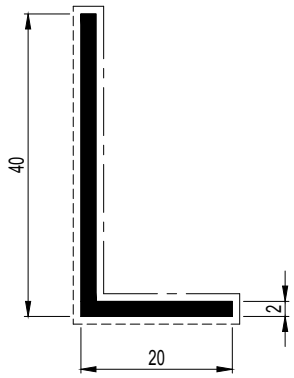

0L5.0253.XX

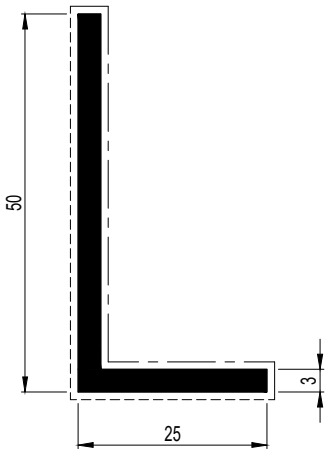

0A1.2033.XX

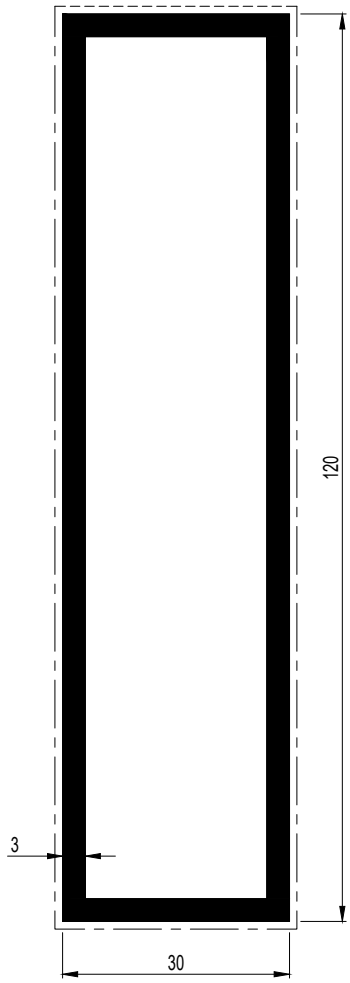

C

D0069324

AFSTANDSHOUDER BEGLAZING
REDUCTEUR DE FEUILLURE VITRAGE
FILLISTER REDUCER PART GLAZING
GLASFALZVERKLEINERUNGSPROFIL

	A dm²/m	P dm²/m	Lm	Ix cm⁴	Wx cm³	ax mm	Iy cm⁴	Wy cm³	ay mm
034.0514.XX	6.06	0.2	7.00	-	-	-	-	-	-
034.0517.XX	4.36	0.8	7.00	-	-	-	-	-	-
034.0615.XX	10.62	3.2	7.00	-	-	-	-	-	-
034.0616.XX	12.42	4.8	7.00	-	-	-	-	-	-
034.0617.XX	5.28	1.2	7.00	-	-	-	-	-	-
034.0618.XX	6.88	2.0	7.00	-	-	-	-	-	-
034.0619.XX	11.26	3.6	7.00	-	-	-	-	-	-

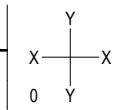

034.0514.XX

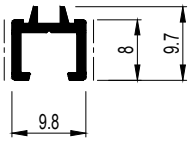

034.0517.XX

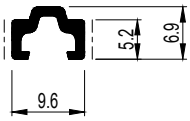

034.0615.XX

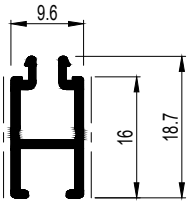

034.0616.XX

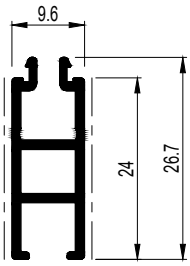

034.0617.XX

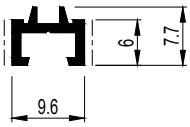

034.0618.XX

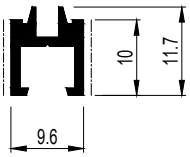

034.0619.XX

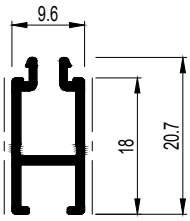

C

D0040975

GLASLATTEN
PARCLOSES
GLAZING BEADS
GLASLEISTEN

	A dm²/m	P dm²/m	Lm	Ix cm⁴	Wx cm³	ax mm	Iy cm⁴	Wy cm³	ay mm
004.3306.XX	12.90	3.4	6.00	0.265	0.197	13.47	0.685	0.521	12.90
004.3307.XX	10.11	2.6	6.00	0.259	0.187	13.88	0.443	0.281	10.22
004.3309.XX	15.13	3.7	6.00	0.389	0.338	11.53	0.684	0.469	14.61
004.3310.XX	17.64	4.9	6.00	1.052	0.737	14.28	0.811	0.502	16.15
004.3312.XX	15.14	3.4	6.00	0.316	0.252	12.55	0.685	0.508	13.48
004.3328.XX	8.85	2.4	6.00	0.261	0.190	13.71	0.382	0.231	9.44
004.3329.XX	16.27	4.4	6.00	0.658	0.568	11.58	0.738	0.466	15.85
004.3333.XX	15.36	4.1	6.00	0.515	0.516	9.98	0.676	0.437	15.46

004.3328.XX

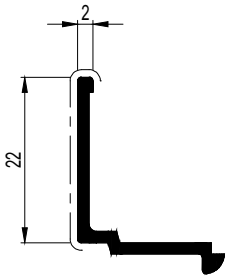

004.3307.XX

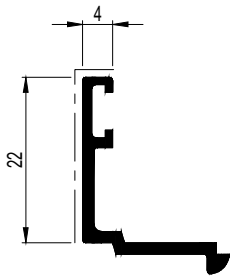

004.3306.XX

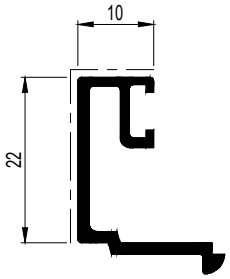

004.3312.XX

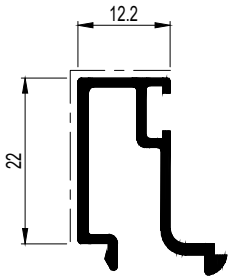

004.3309.XX

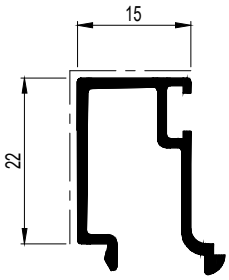

004.3333.XX

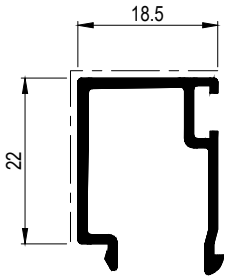

004.3329.XX

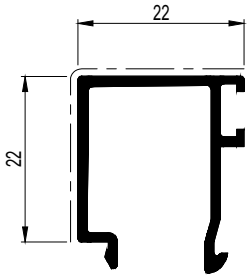

004.3310.XX

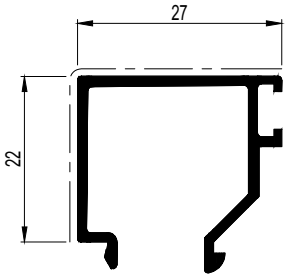

D0027592

C

CR 120

STALEN PROFIEL
PROFILE EN ACIER
STEEL PROFILE
STAHLPROFIL

	A dm²/m	P dm²/m	Lm	Ix cm⁴	Wx cm³	ax mm	Iy cm⁴	Wy cm³	ay mm
0S0.8015.--	-	-	6.00	64.000	16.000	40.00	2.250	3.000	7.50
0S7.0503.--	-	-	6.00	44.050	12.590	35.00	26.100	10.440	25.00
0S8.0403.--	-	-	6.00	52.250	13.060	40.00	17.560	8.770	20.00
0S8.0405.--	-	-	6.00	75.110	18.780	40.00	24.590	12.300	20.00

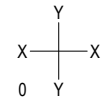

0S0.8015.--

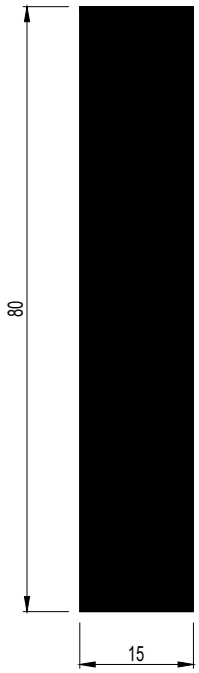

0S7.0503.--

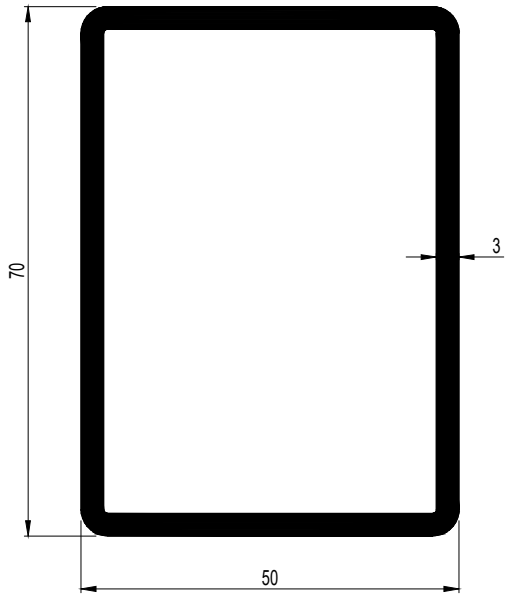

0S8.0403.--

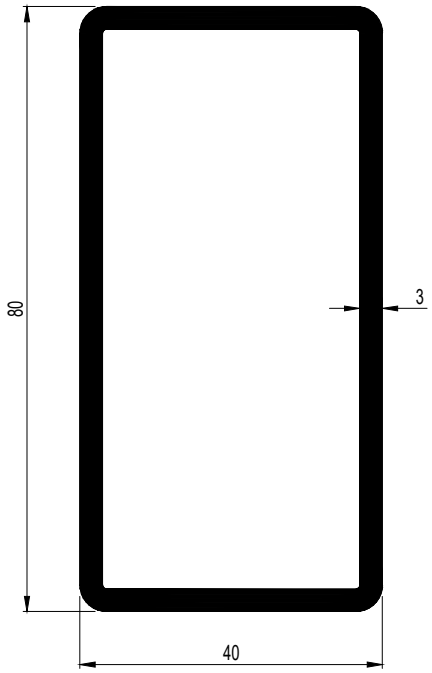

0S8.0405.--

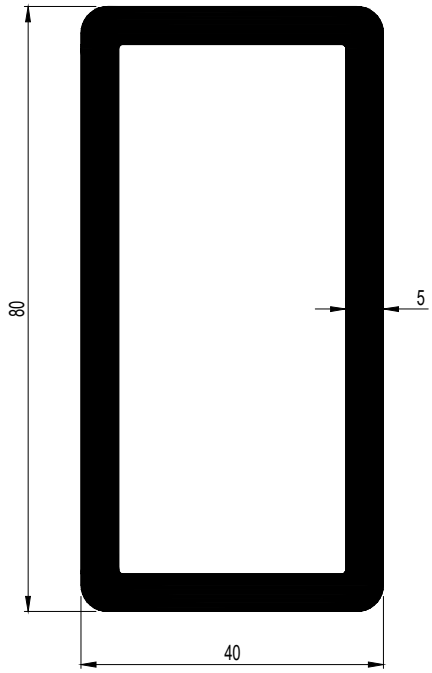

C

D0022628

D

Reynaers Aluminium

Doorsnedetekeningen
Sections des noeuds
Section drawings
Profilkombinationen

D

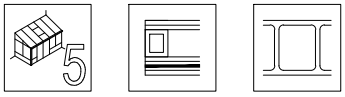

$5° < \alpha < 45°$

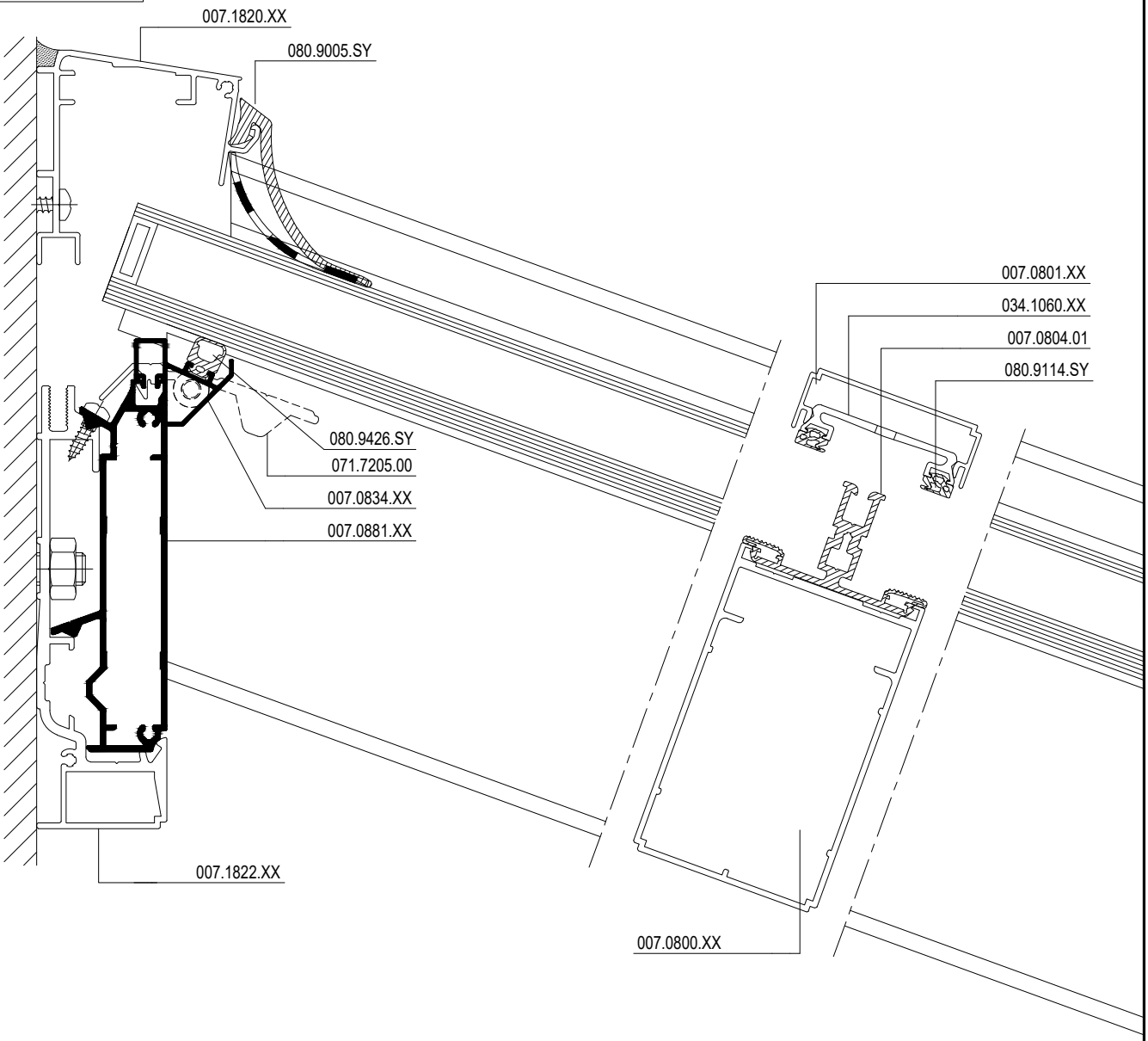

D0069816

D

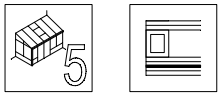

$5° < \alpha < 45°$

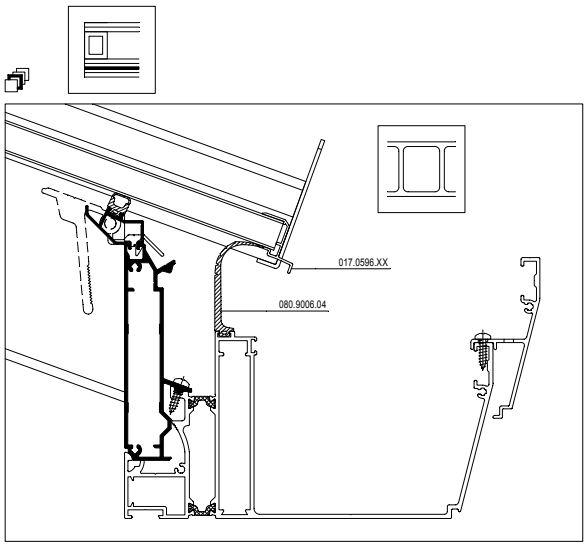

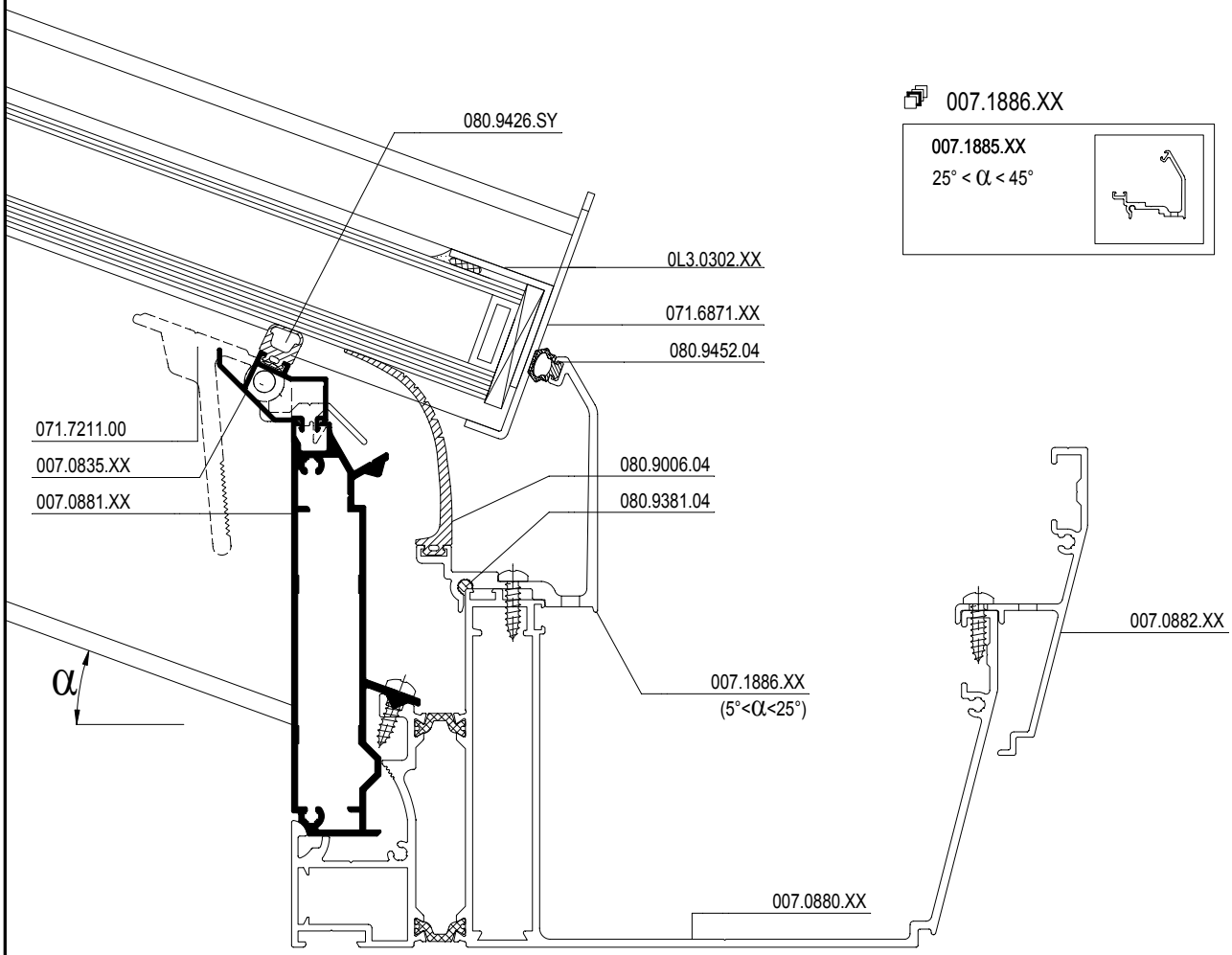

007.1886.XX

007.1885.XX
$25° < \alpha < 45°$

D

D0069817

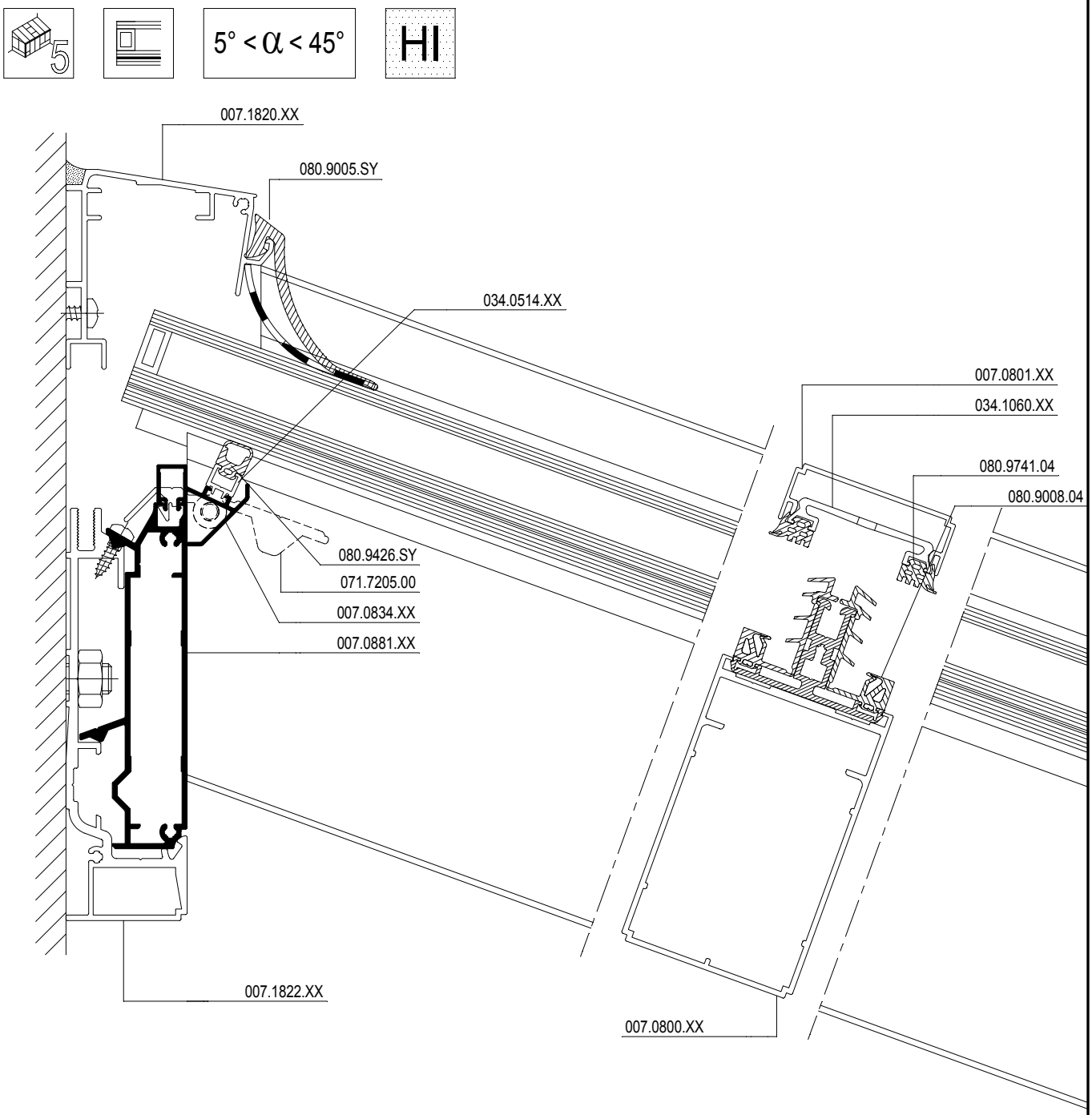
5° < α < 45°
HI
007.1820.XX
080.9005.SY
034.0514.XX
007.0801.XX
034.1060.XX
080.9741.04
080.9008.04
080.9426.SY
071.7205.00
007.0834.XX
007.0881.XX
007.1822.XX
007.0800.XX

D0069820

D

5° < α < 45°

HI

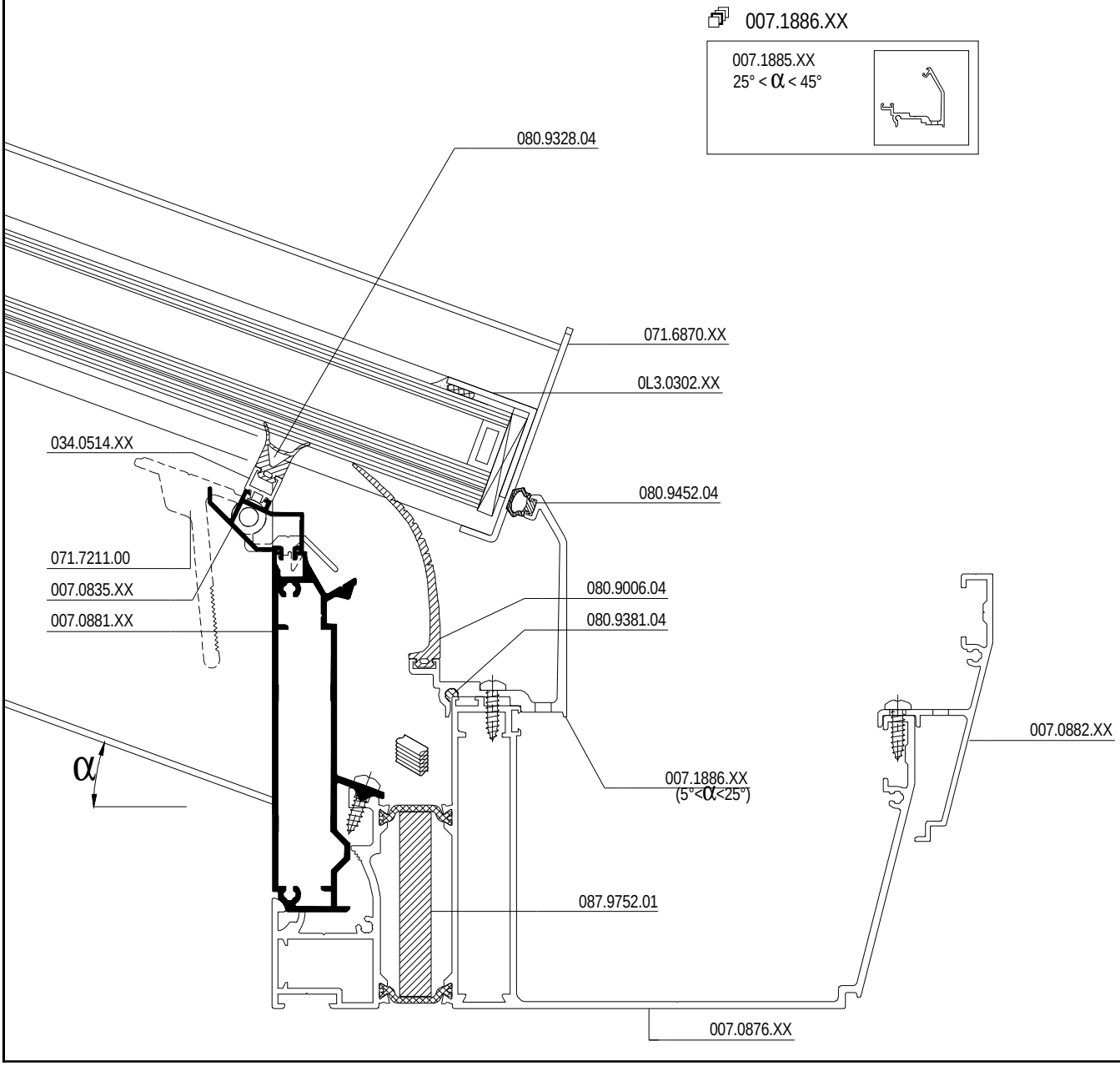

D

D0069821

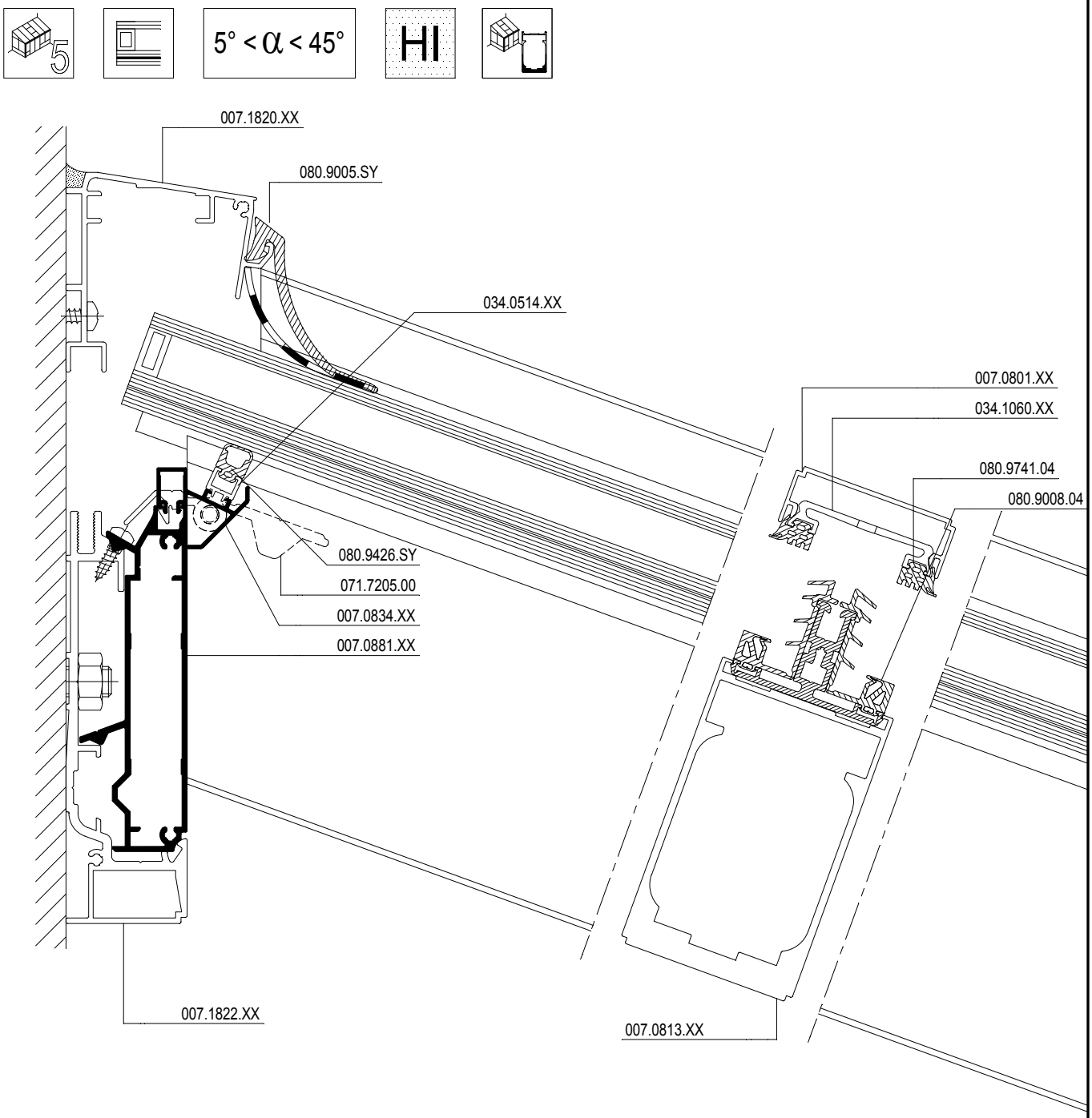
5° < α < 45°
HI
007.1820.XX
080.9005.SY
034.0514.XX
007.0801.XX
034.1060.XX
080.9741.04
080.9008.04
080.9426.SY
071.7205.00
007.0834.XX
007.0881.XX
007.1822.XX
007.0813.XX

D0069861

D

D

5° < α < 45°

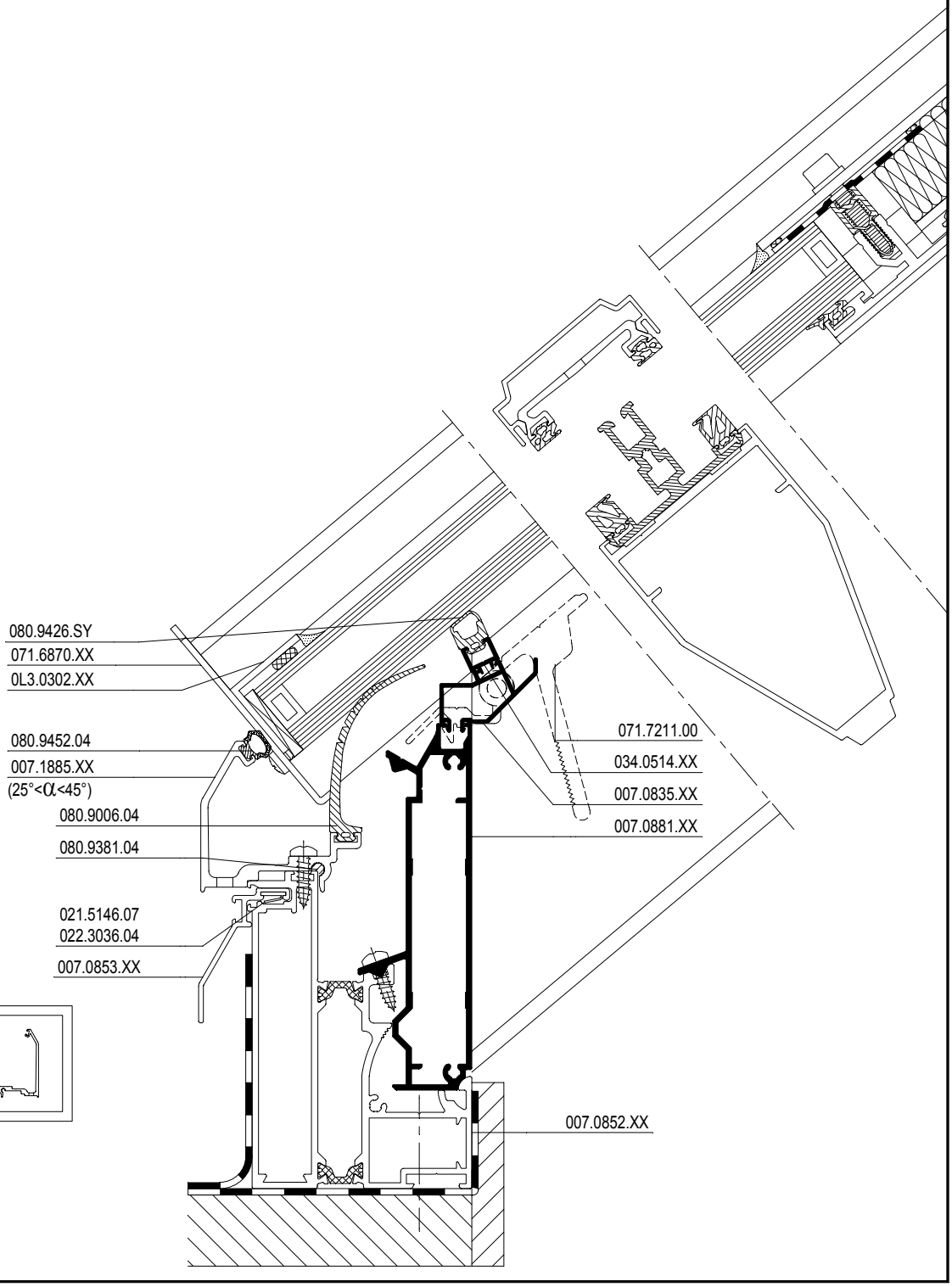

007.1885.XX

007.1886.XX
5° < α < 25°

D0069863

D

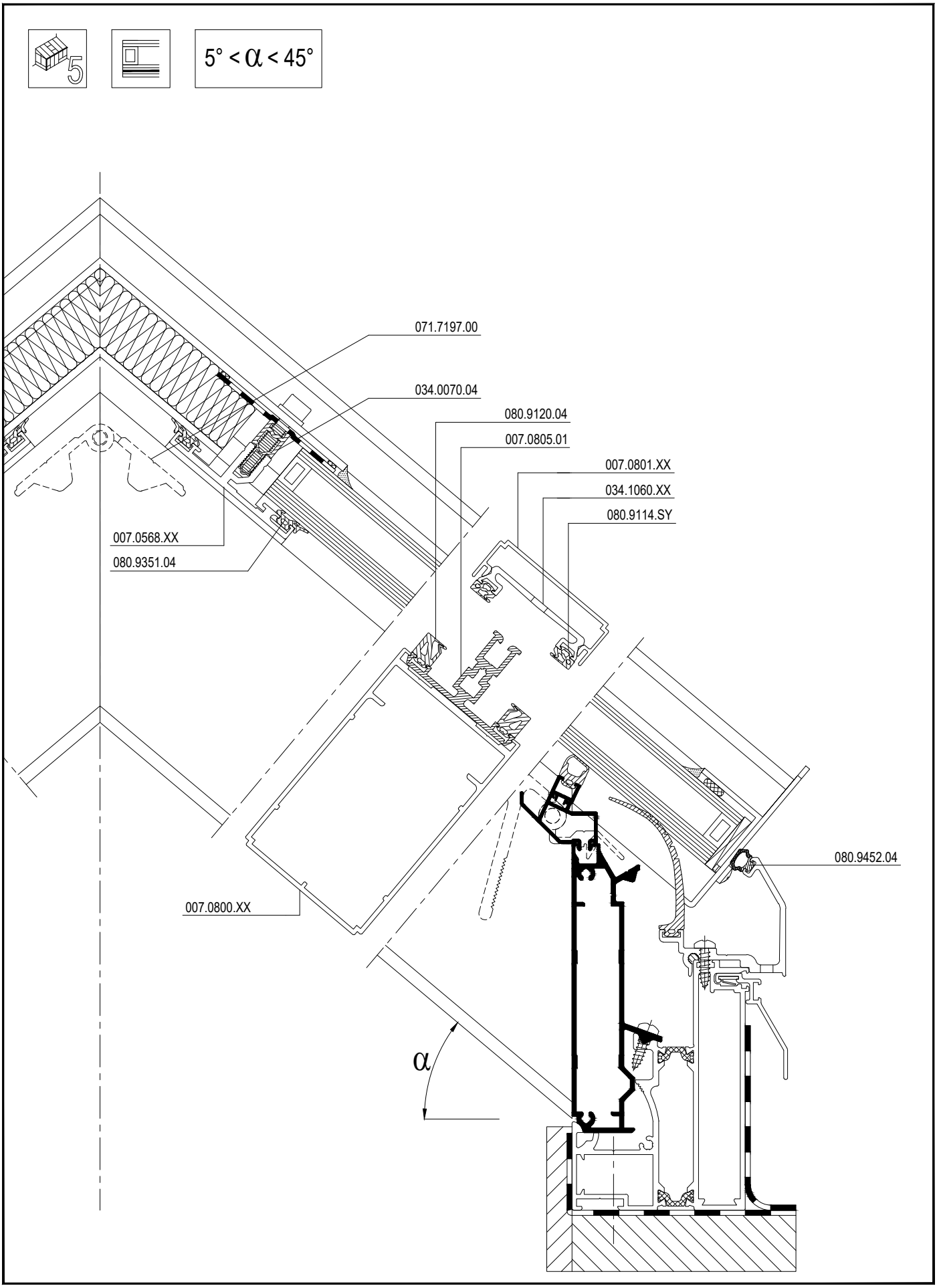
5
5° < α < 45°
071.7197.00
034.0070.04
080.9120.04
007.0805.01
007.0801.XX
034.1060.XX
080.9114.SY
007.0568.XX
080.9351.04
080.9452.04
007.0800.XX
α
D0069864


5° < α < 45°

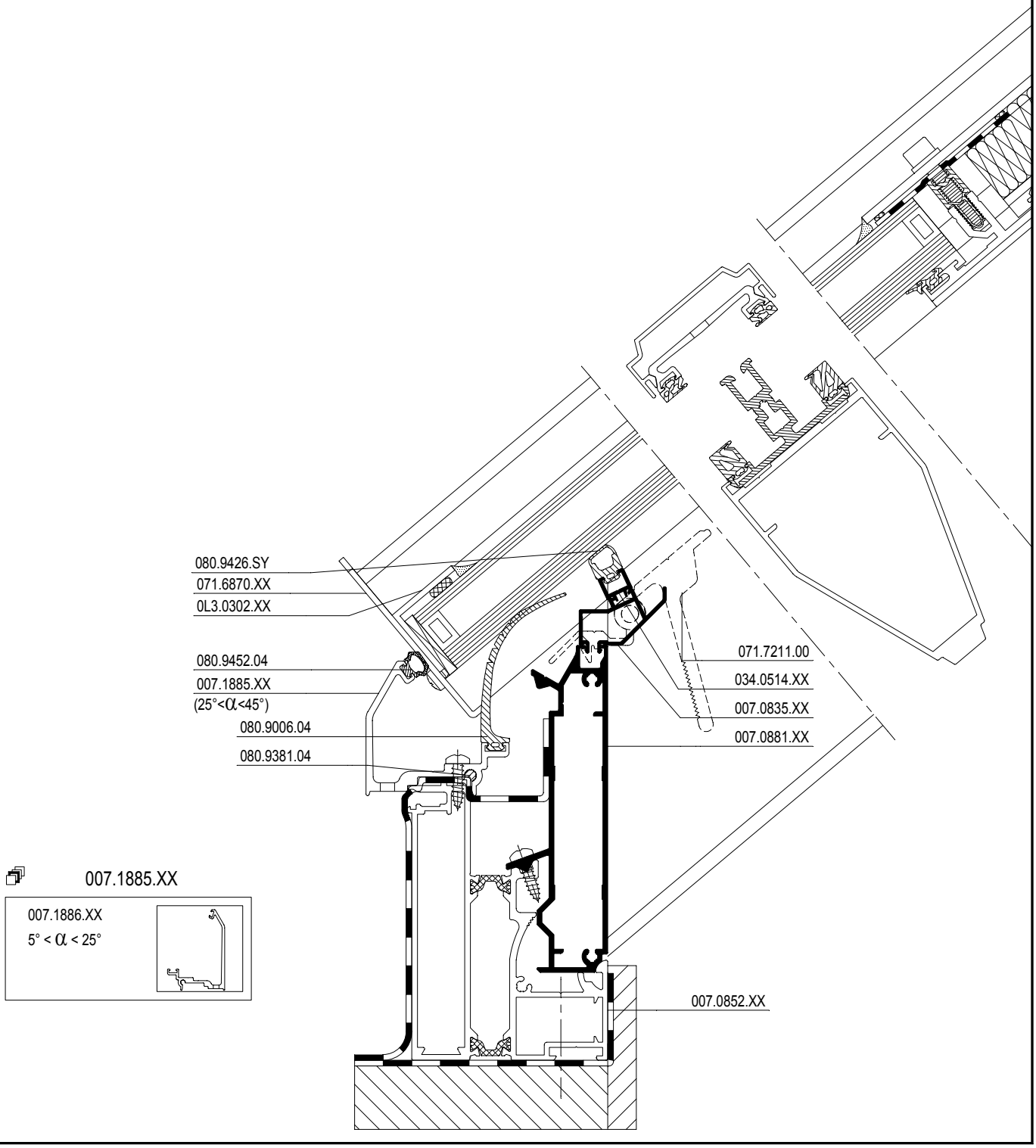

D2001514

D

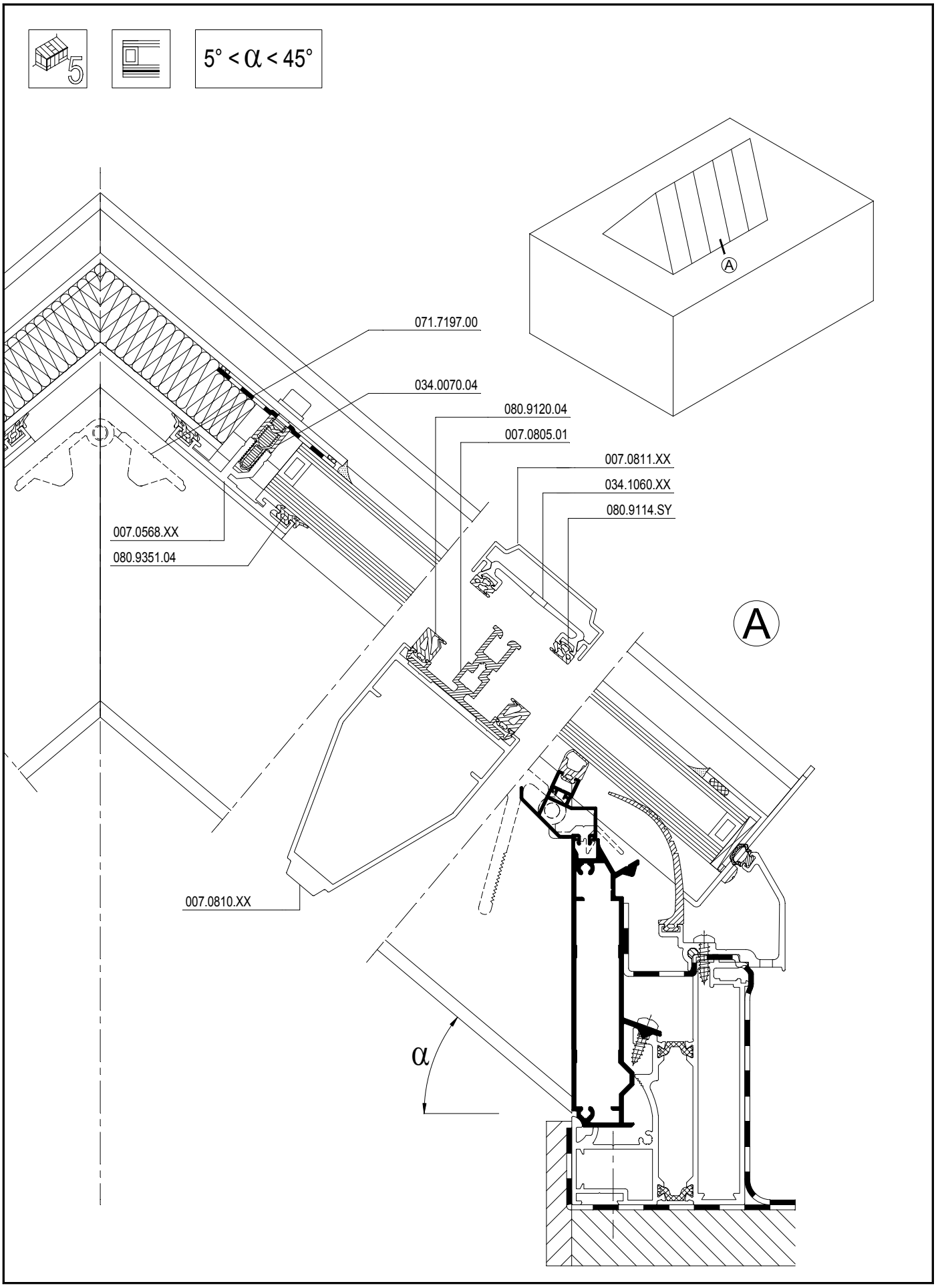
5
5° < α < 45°
A
071.7197.00
034.0070.04
080.9120.04
007.0805.01
007.0811.XX
034.1060.XX
080.9114.SY
007.0568.XX
080.9351.04
A
007.0810.XX
α

D

D2001515

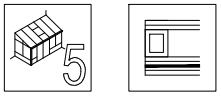

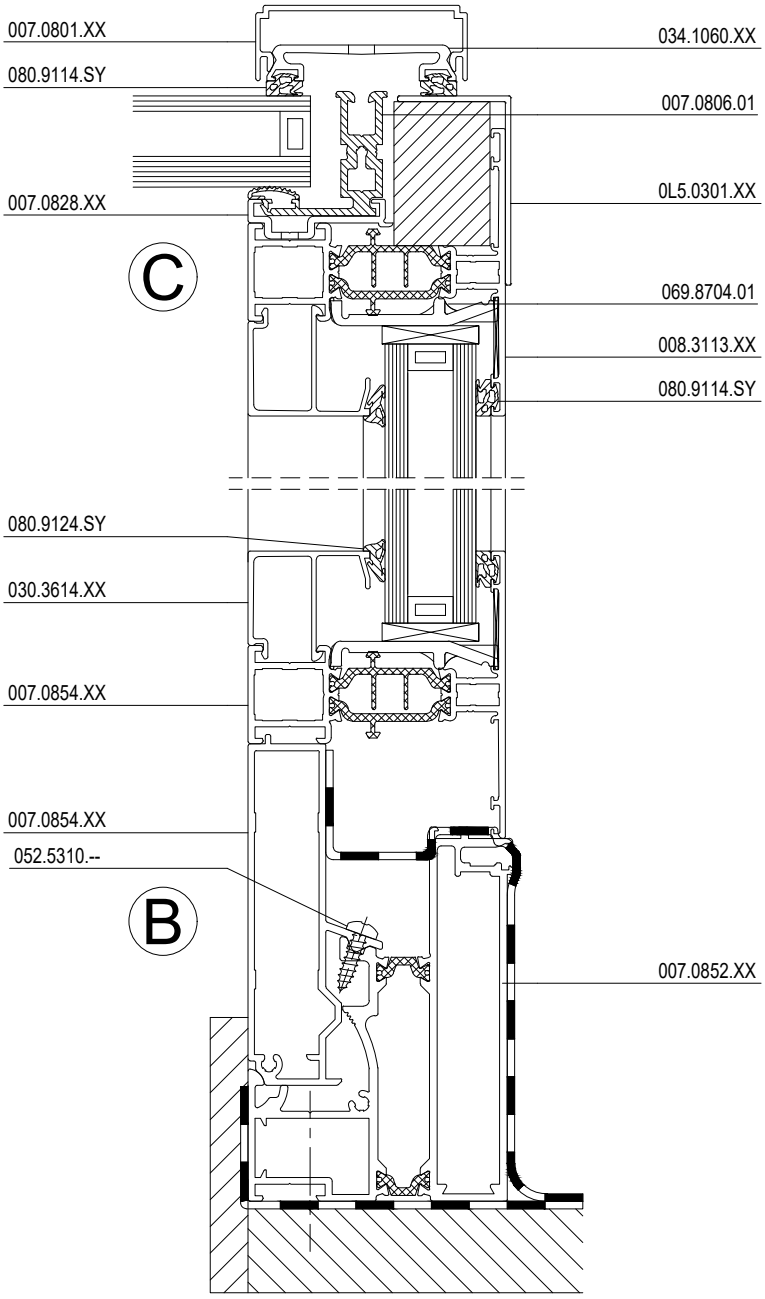
007.0801.XX
080.9114.SY
007.0828.XX
C
080.9124.SY
030.3614.XX
007.0854.XX
007.0854.XX
052.5310.--
B
034.1060.XX
007.0806.01
0L5.0301.XX
069.8704.01
008.3113.XX
080.9114.SY
007.0852.XX

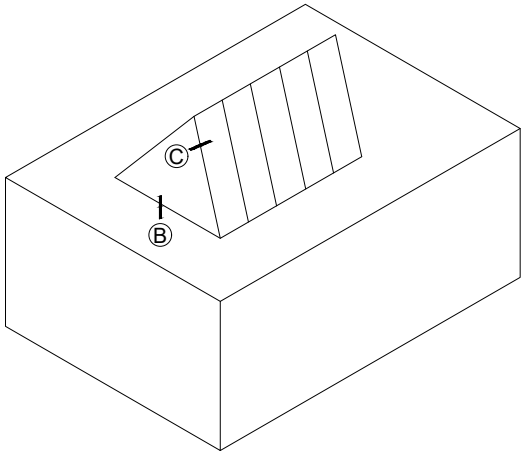
C
B

D2001516

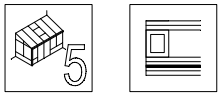

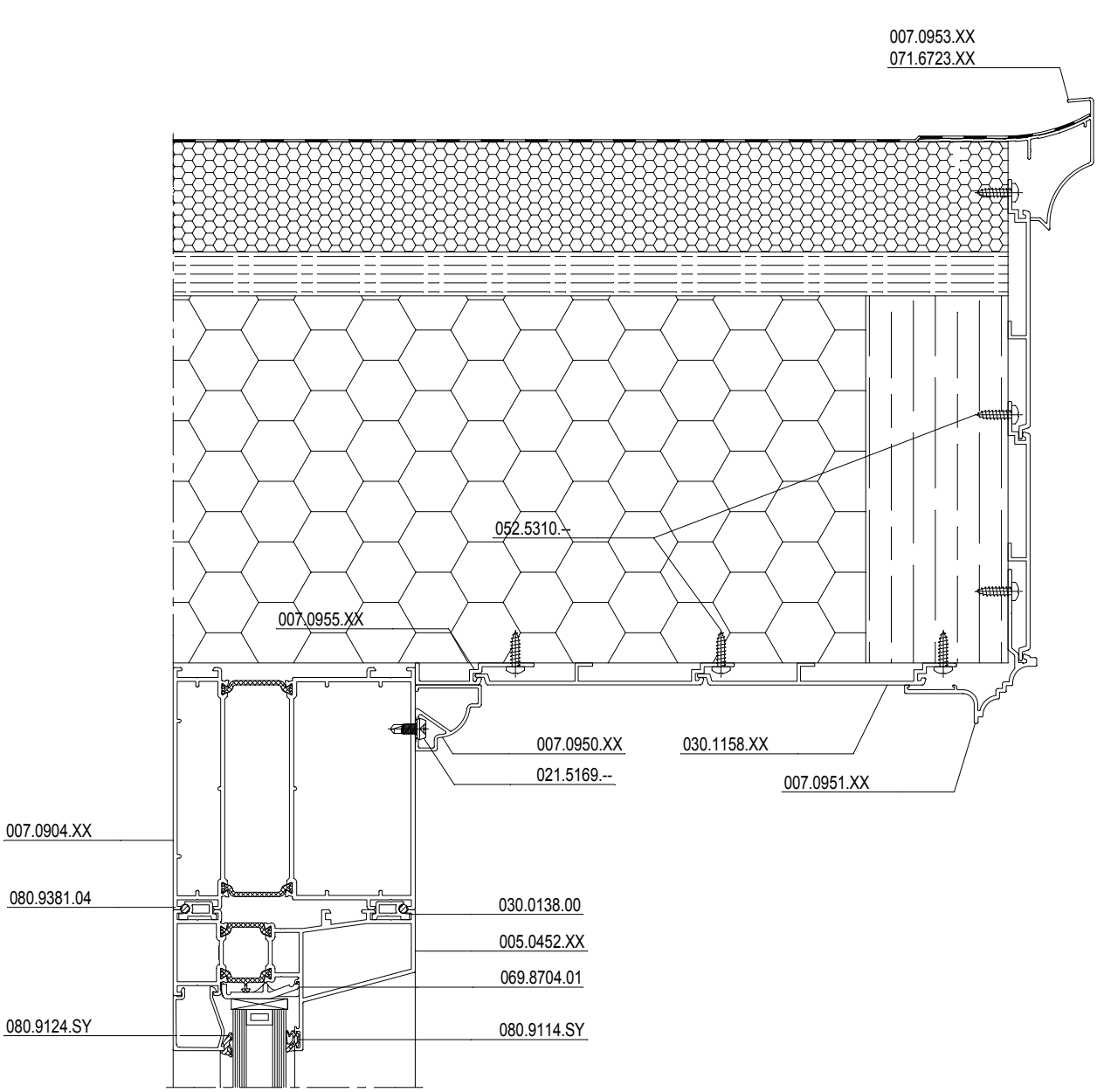
007.0953.XX
071.6723.XX
052.5310.--
007.0955.XX
007.0950.XX
030.1158.XX
021.5169.--
007.0951.XX
007.0904.XX
080.9381.04
030.0138.00
005.0452.XX
069.8704.01
080.9124.SY
080.9114.SY

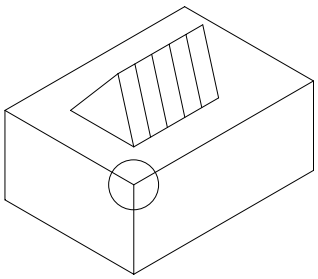

D

D2001551

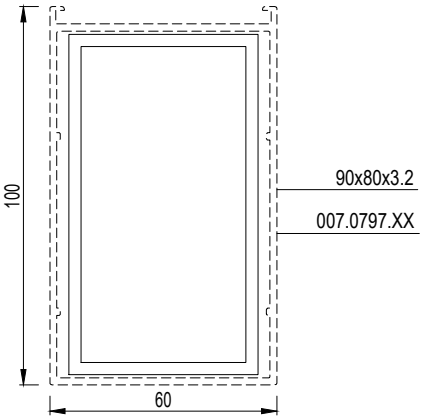
100
60
90x80x3.2
007.0797.XX

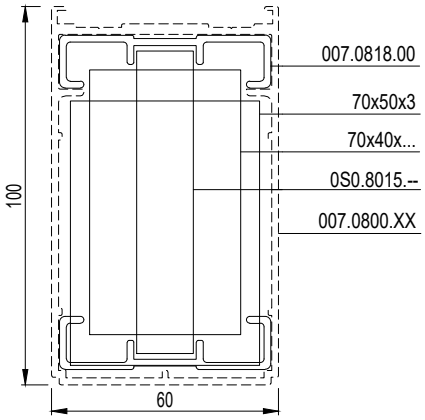
100
60
007.0818.00
70x50x3
70x40x...
0S0.8015.--
007.0800.XX

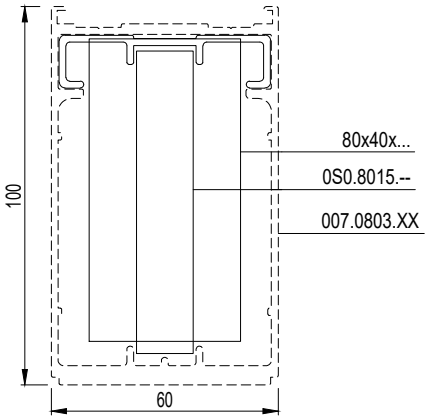
100
60
80x40x...
0S0.8015.--
007.0803.XX

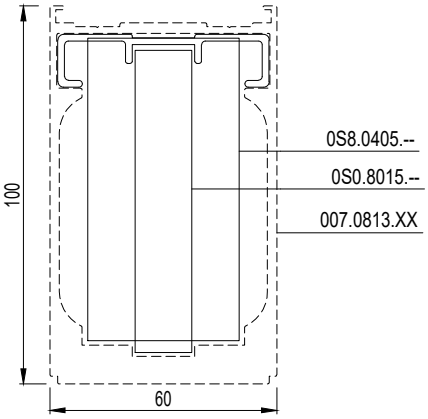
100
60
0S8.0405.--
0S0.8015.--
007.0813.XX

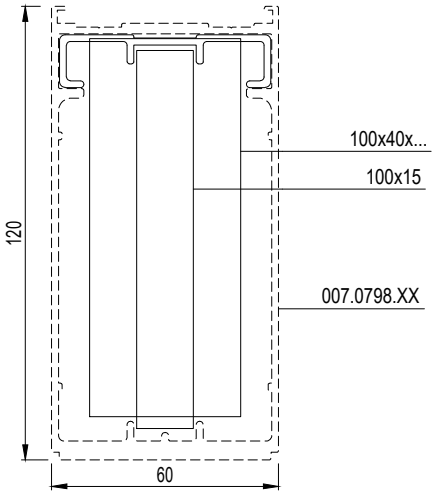
120
60
100x40x...
100x15
007.0798.XX

D

D0004374

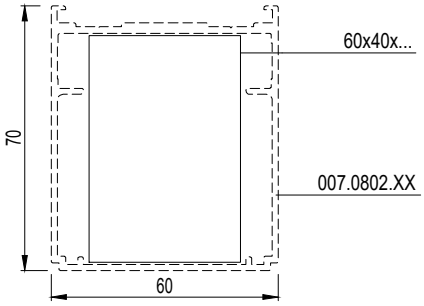
60x40x...
007.0802.XX
70
60

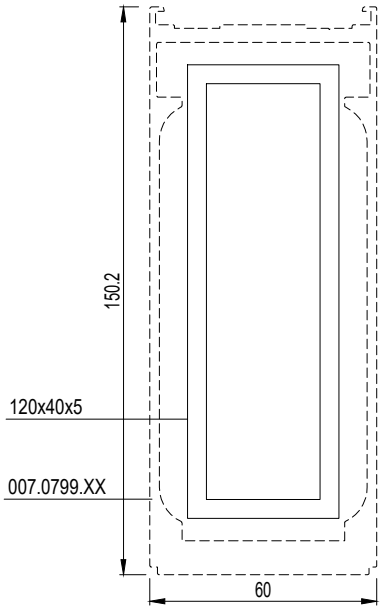
150.2
120x40x5
007.0799.XX
60

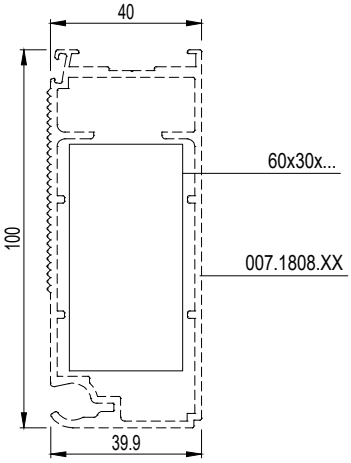
40
60x30x...
007.1808.XX
100
39.9

D

D0070120

CR 120

ZIJKANT DRAGER
PROFILE DE RIVE
EDGE SECTION
SEITENSPARREN

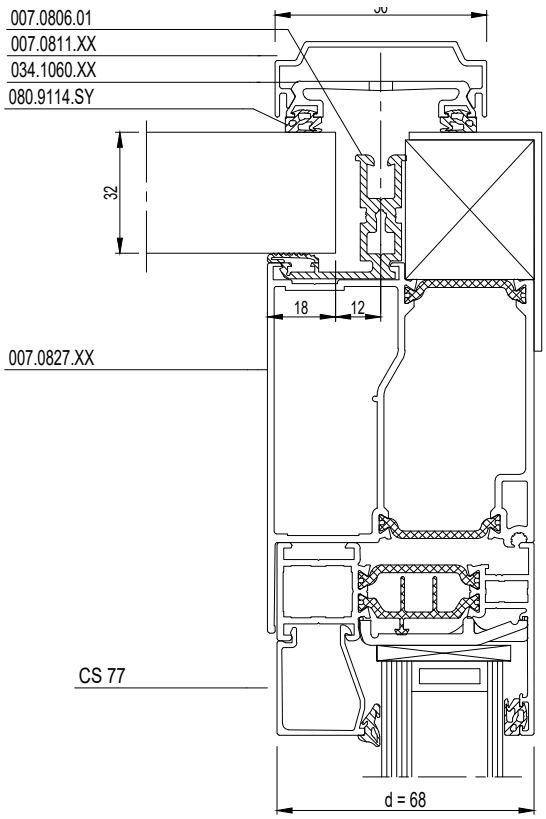

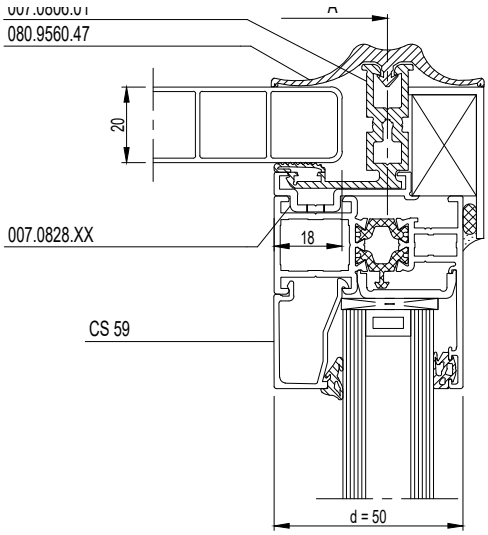

D

D0069360

ZIJKANT DRAGER
PROFILE DE RIVE
EDGE SECTION
SEITENSPARREN

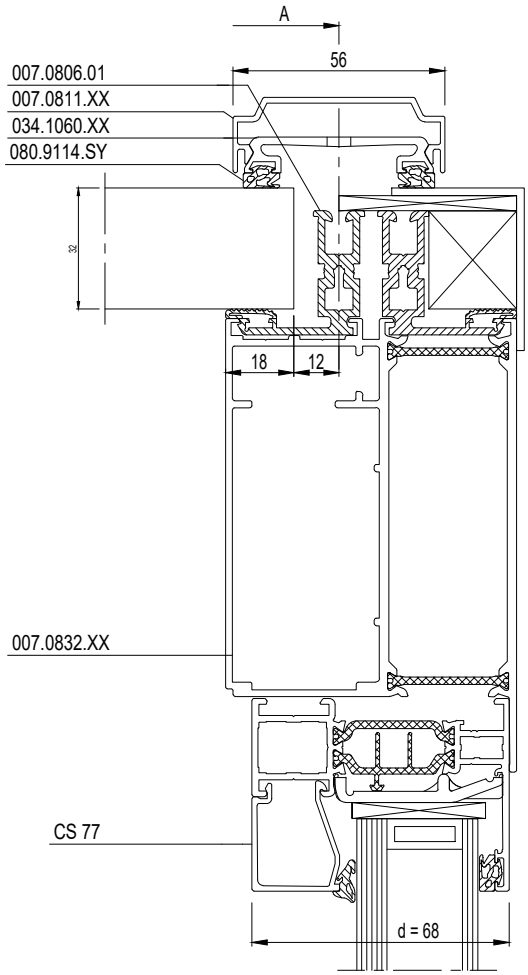

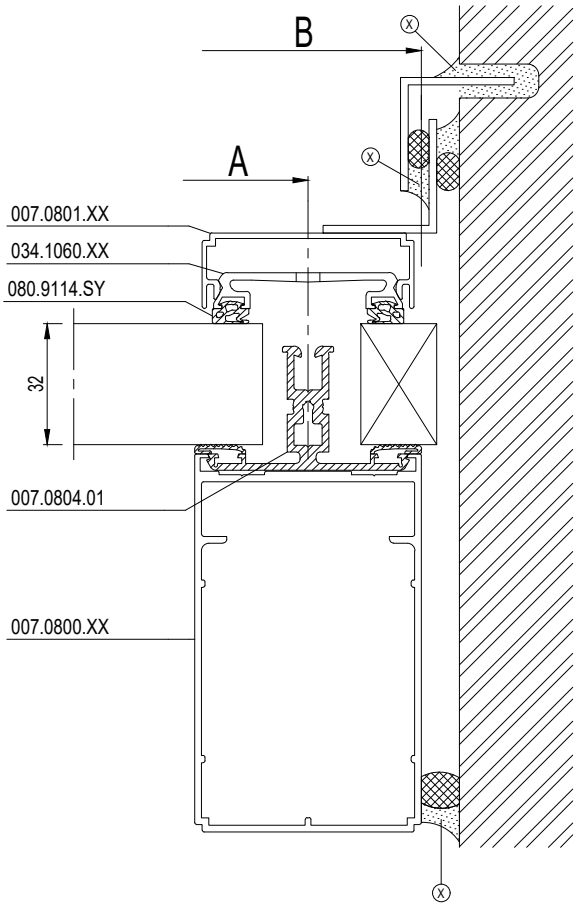

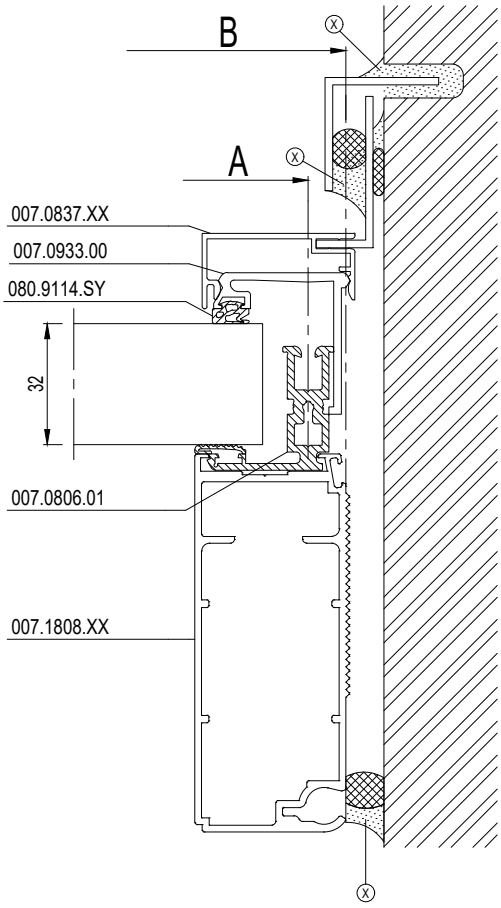

D0069362

D

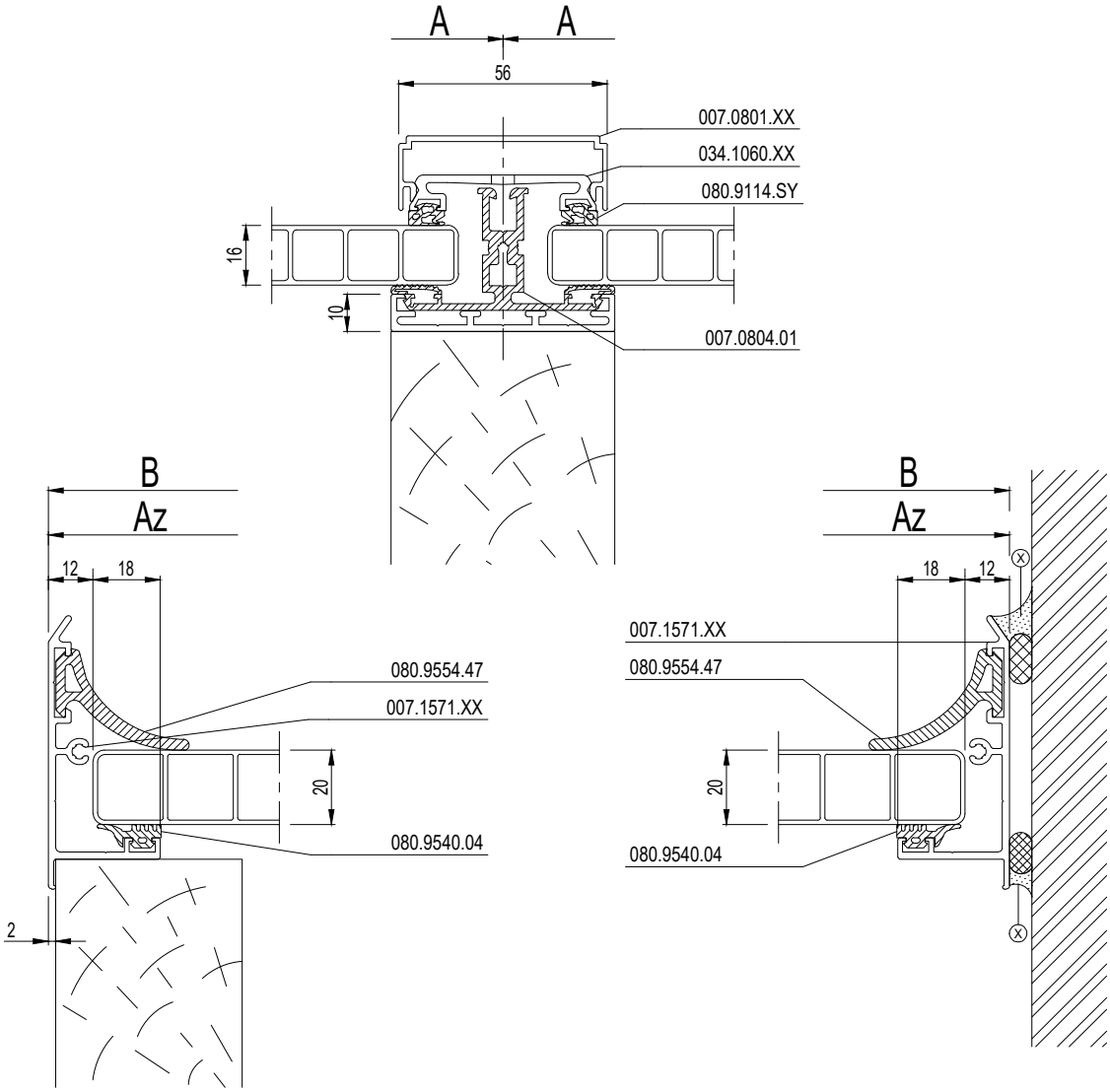
A
A
56
007.0801.XX
034.1060.XX
080.9114.SY
16
10
007.0804.01
B
Az
12
18
080.9554.47
007.1571.XX
20
080.9540.04
2
B
Az
18
12
007.1571.XX
080.9554.47
20
080.9540.04

D

D0069498

OVERZICHT AFDEKKAPPEN
APERCU CAPUCHONS
OVERVIEW COVERS
UEBERSICHT ABDECKKAPPEN

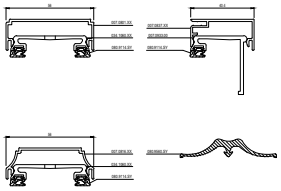

D

D0069352

OVERZICHT AFDICHTING ZIJKANT GOOT
APERCU FERMETURE LATERALE GOUTTIERE
OVERVIEW END PIECE GUTTER
UEBERSICHT ENDKAPPE DACHRINNE

VERHOGINGEN GOOT
PROFILE REHAUSSE DE GOUTTIERE
RAISING PROFILES GUTTER SECTION
RINNENVERBREITERUNGEN

Reynaers Aluminium

α = 5°

g ≤ 32 mm	071.6870.XX
33 ≤ g ≤ 55 mm	071.6970.XX
56 ≤ g ≤ 68 mm	071.6972.XX

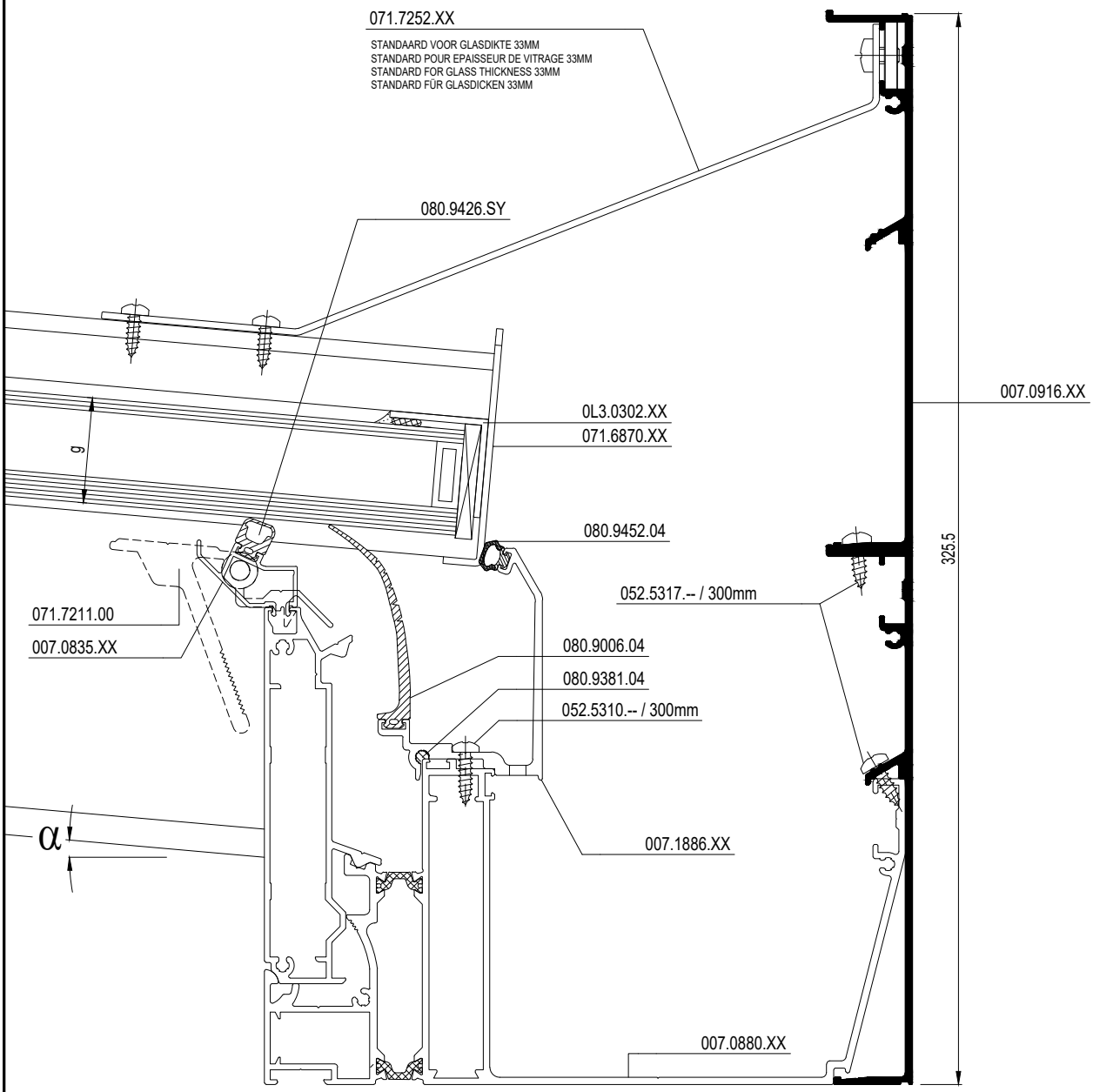

D

D2001635

Reynaers Aluminium

α = 5°

g ≤ 32 mm	071.6870.XX
33 ≤ g ≤ 55 mm	071.6970.XX
56 ≤ g ≤ 68 mm	071.6972.XX

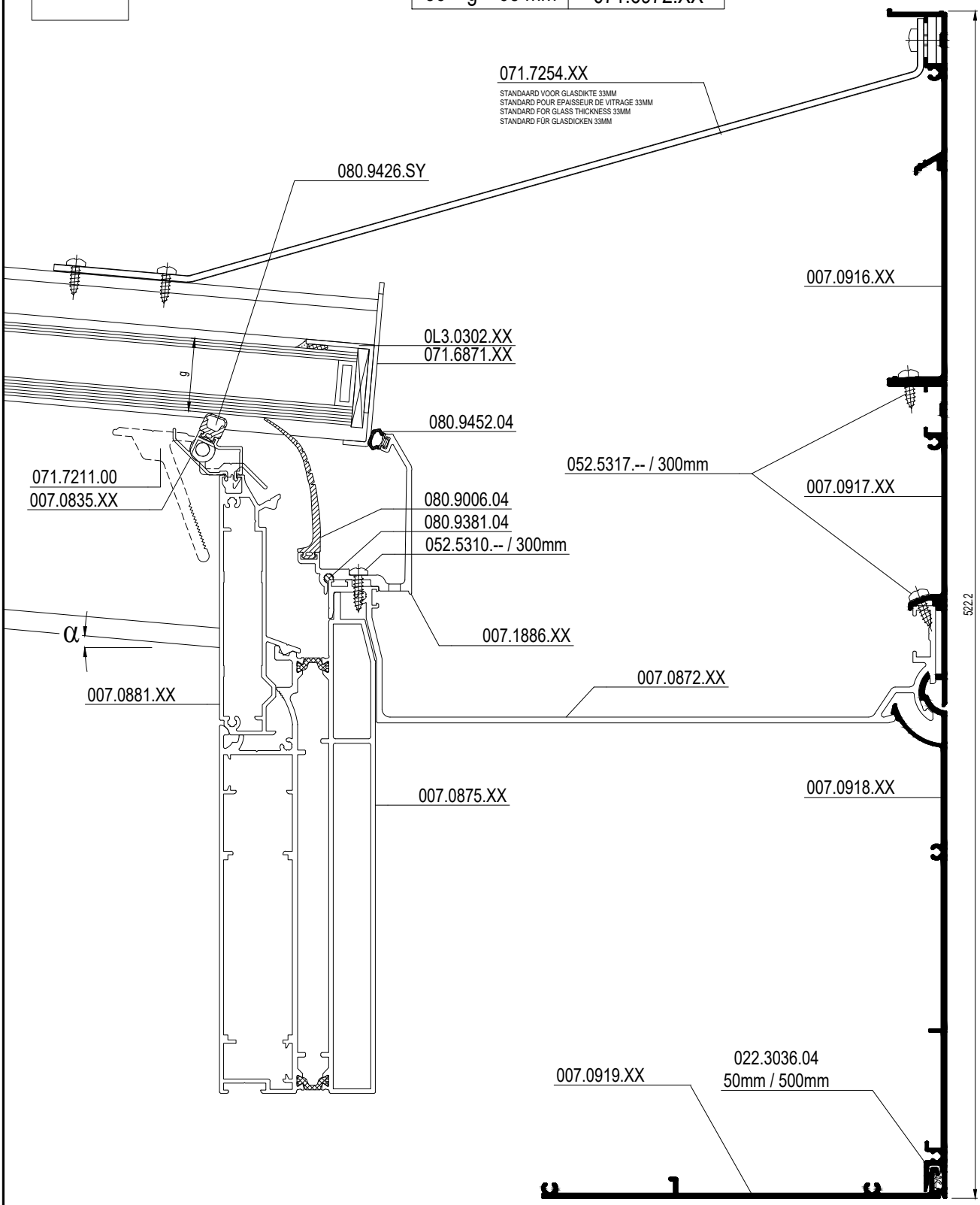

D2001636

D

OVERZICHT AFDICHTING ZIJKANT GOOT
APERCU FERMETURE LATERALE GOUTTIERE
OVERVIEW END PIECE GUTTER
UEBERSICHT ENDKAPPE DACHRINNE

Reynaers Aluminium

OPZETPROFIEL PROFILE AUXILIAIRE AUXILIARY PROFILE ZUSATZPROFIL	007.0869.XX	007.0882.XX	007.0883.XX	007.0896.XX	007.0916.XX 007.0917.XX 007.0918.XX 007.0919.XX	007.0916.XX	-
PROFIEL PROFILE PROFILE PROFIL	-	071.6843.04 071.6844.XX	071.6846.04 071.6847.XX	071.6764.04 071.6765.XX	-	071.7143.04 071.7145.XX	071.7025.04 071.7019.XX
007.0880.XX	-	071.6843.04 071.6844.XX	071.6846.04 071.6847.XX	071.6764.04 071.6765.XX	-	-	071.7025.04 071.7019.XX
007.0878.XX 007.0879.XX 017.0880.XX	071.6758.04 071.6759.XX	-	-	-	-	-	
007.0879.XX 017.0880.XX	-		071.6744.XX	-	-	-	-
007.0875.XX 007.0873.XX 007.0872.XX 007.0874.XX	-	-	-	-	-	-	071.6761.04
007.0862.XX	-	071.6843.04 071.6844.XX	071.6846.04 071.6847.XX	071.6764.04 071.6765.XX	-	071.7143.04 071.7145.XX	071.7025.04 071.7019.XX
007.0876.XX	-	-	-	-	-	-	071.6912.XX
021.4580.XX	-	-	-	-	-	-	-
007.0875.XX 007.0872.XX	-	-	-	-	-	-	-

D

D0069335

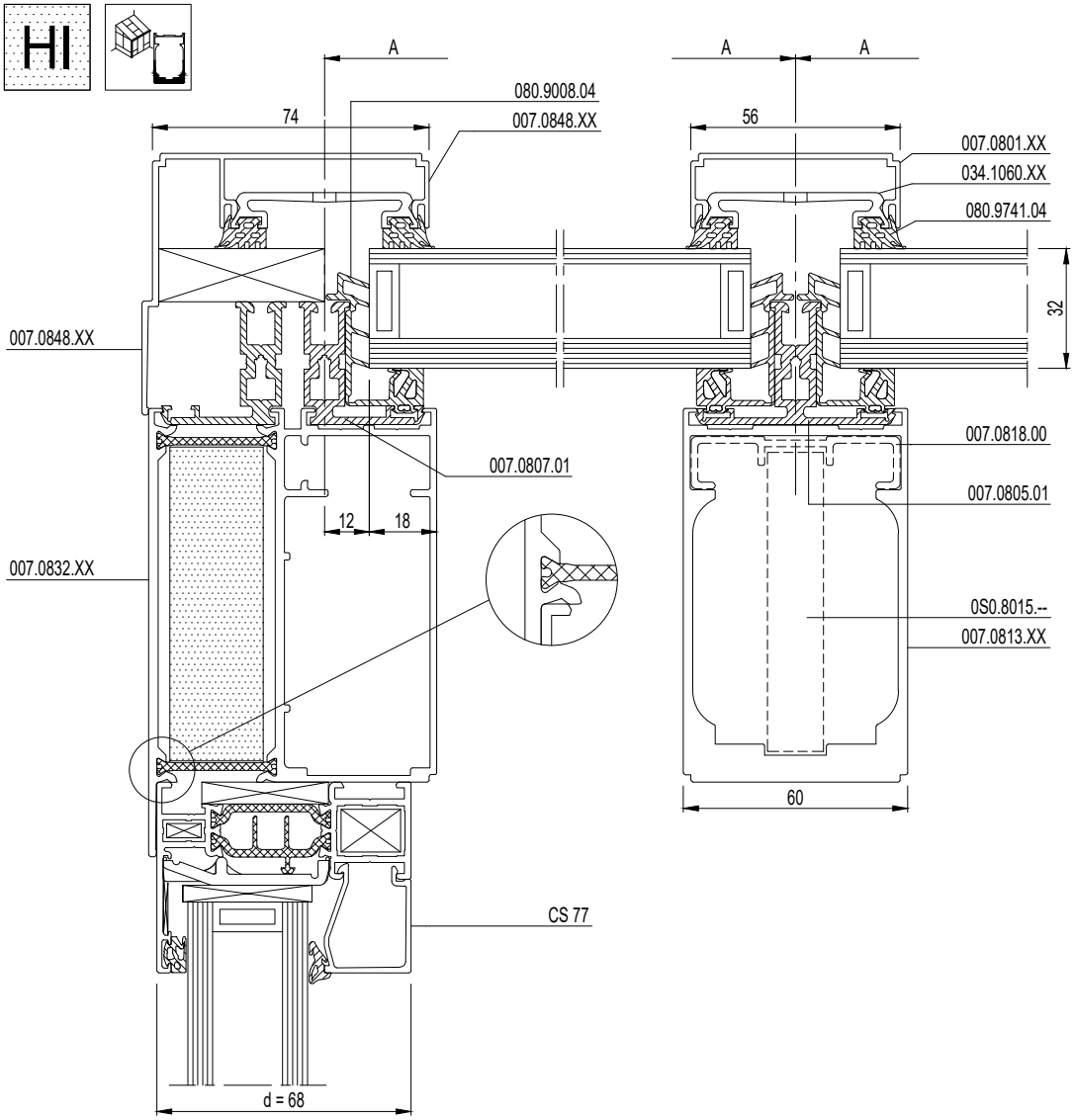
HI
A
A
A
74
56
080.9008.04
007.0848.XX
007.0801.XX
034.1060.XX
080.9741.04
32
007.0848.XX
007.0818.00
007.0807.01
007.0805.01
12
18
007.0832.XX
0S0.8015.--
007.0813.XX
60
CS 77
d = 68

D

D0069370

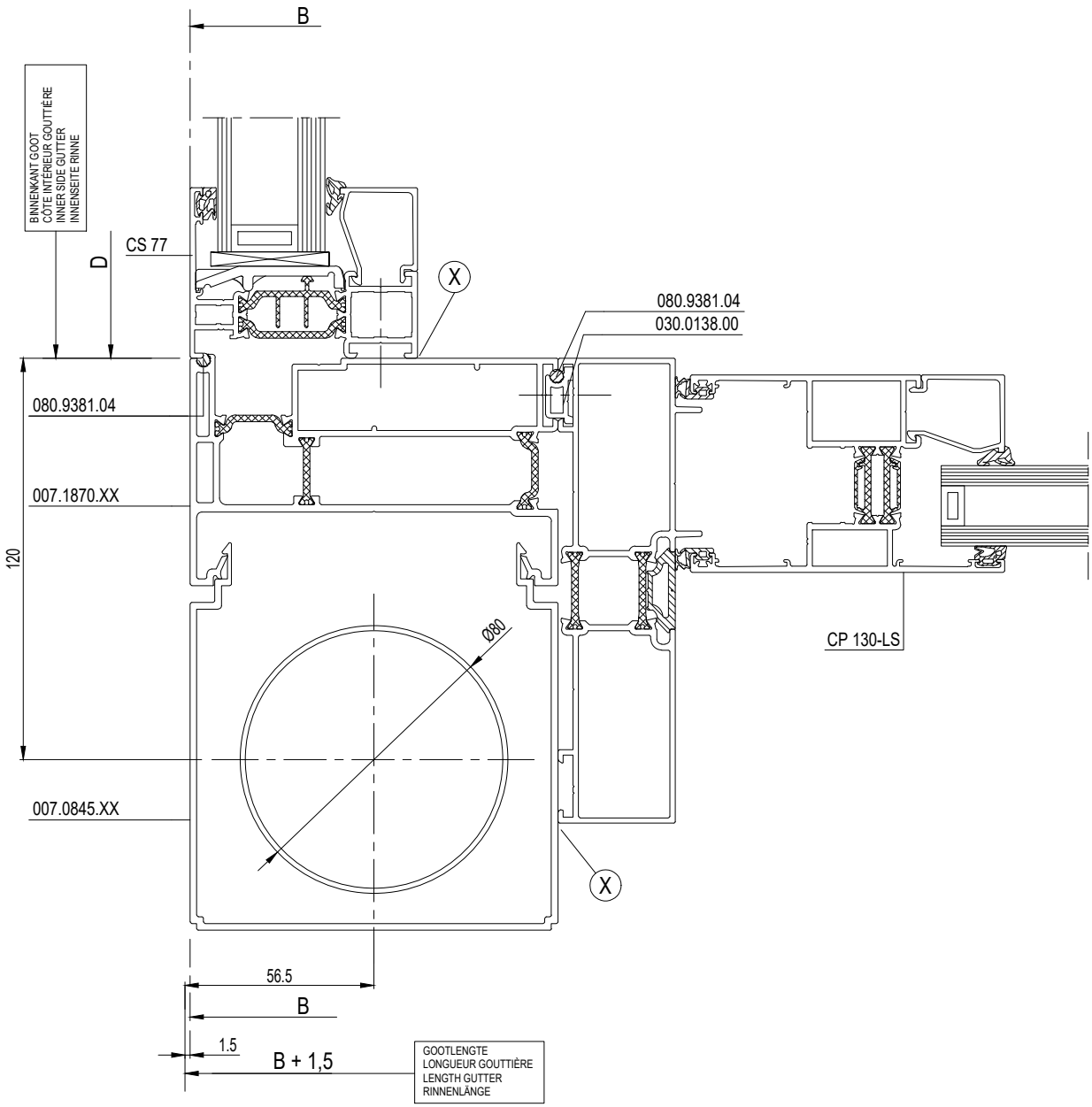
B
BINNENKANT GOOT
CÔTE INTÉRIEUR GOUTTIÈRE
INNER SIDE GUTTER
INNENSEITE RINNE
D
CS 77
X
080.9381.04
030.0138.00
080.9381.04
007.1870.XX
120
Ø80
CP 130-LS
007.0845.XX
X
56.5
B
1.5
B + 1,5
GOOTLENGTE
LONGUEUR GOUTTIÈRE
LENGTH GUTTER
RINNENLÄNGE

D0069385

CR 120

MIDDENSTEUN
SUPPORT CENTRALE
CENTRAL SUPPORT
MITTELSTUETZE

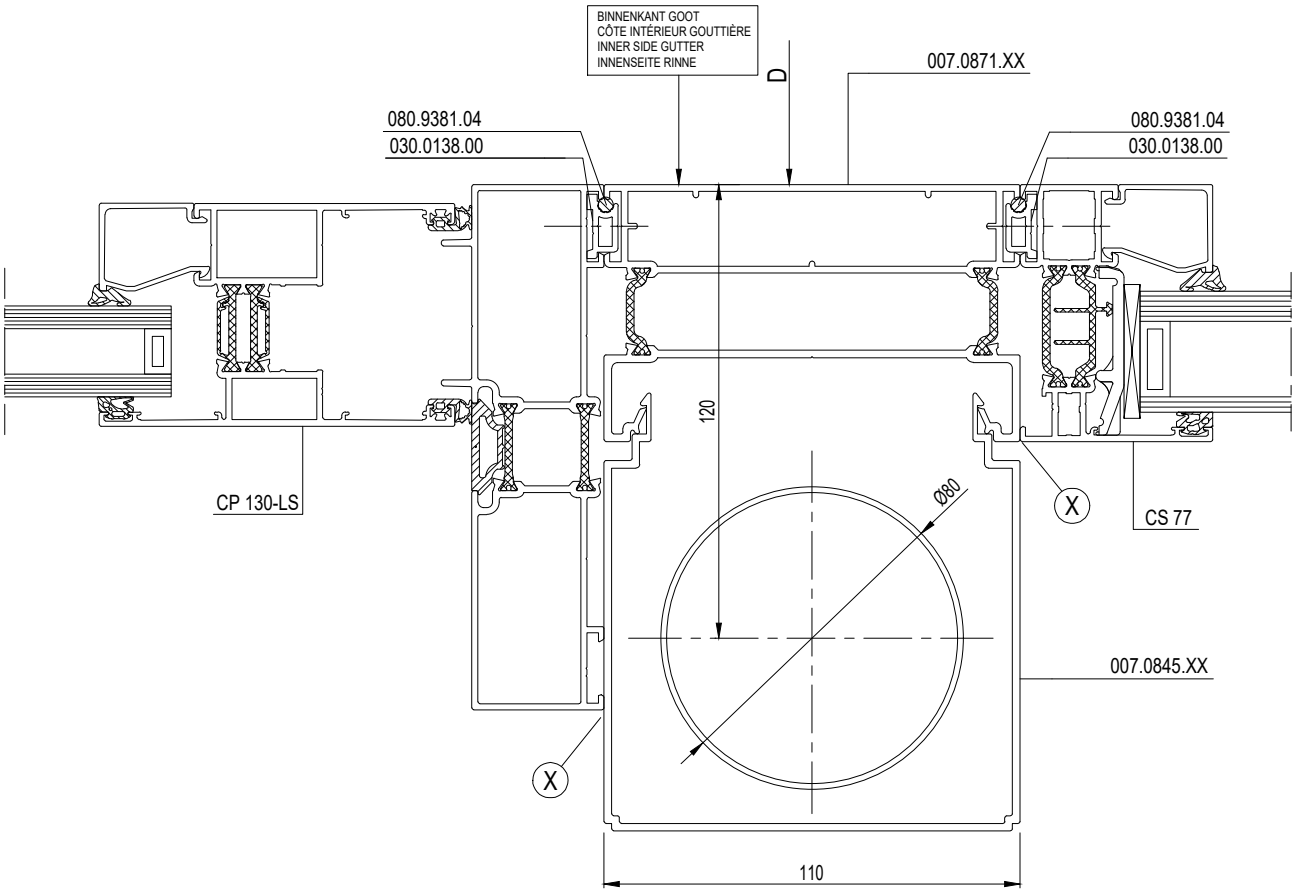

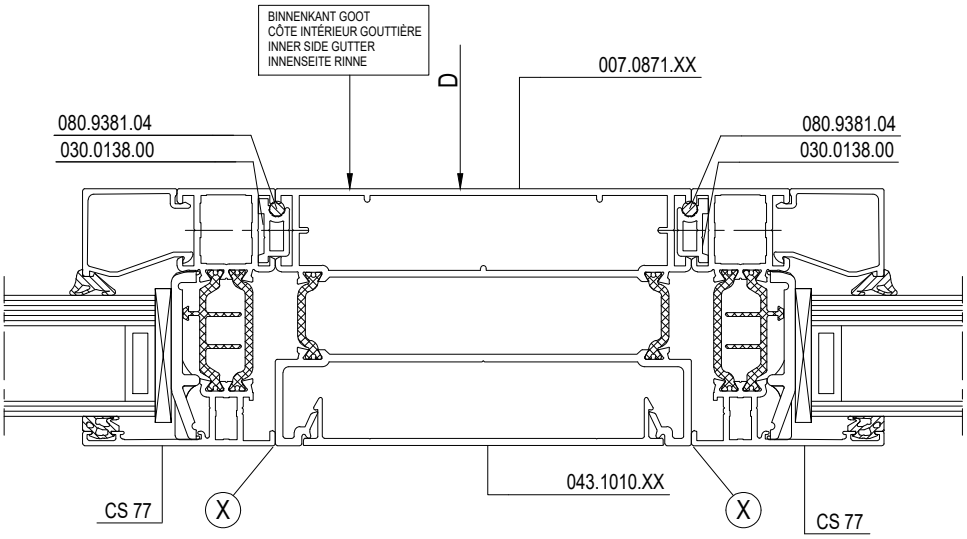

D0069386

D

VERANDAHOEK
COIN DE VERANDA
VERANDA CORNER
WINTERGARTENECKE

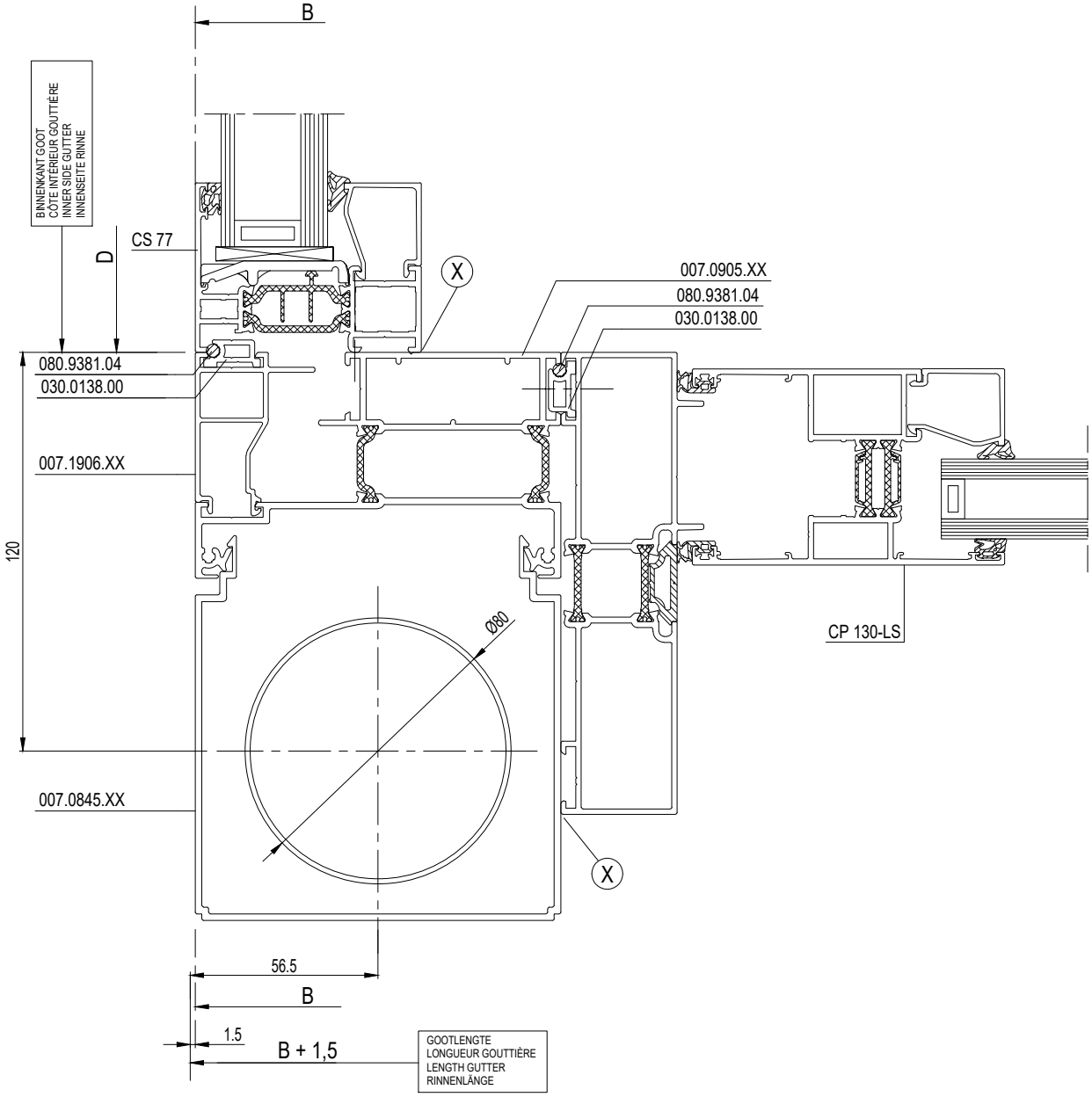

D

D0069383

MIDDENSTEUN
SUPPORT CENTRALE
CENTRAL SUPPORT
MITTELSTUETZE

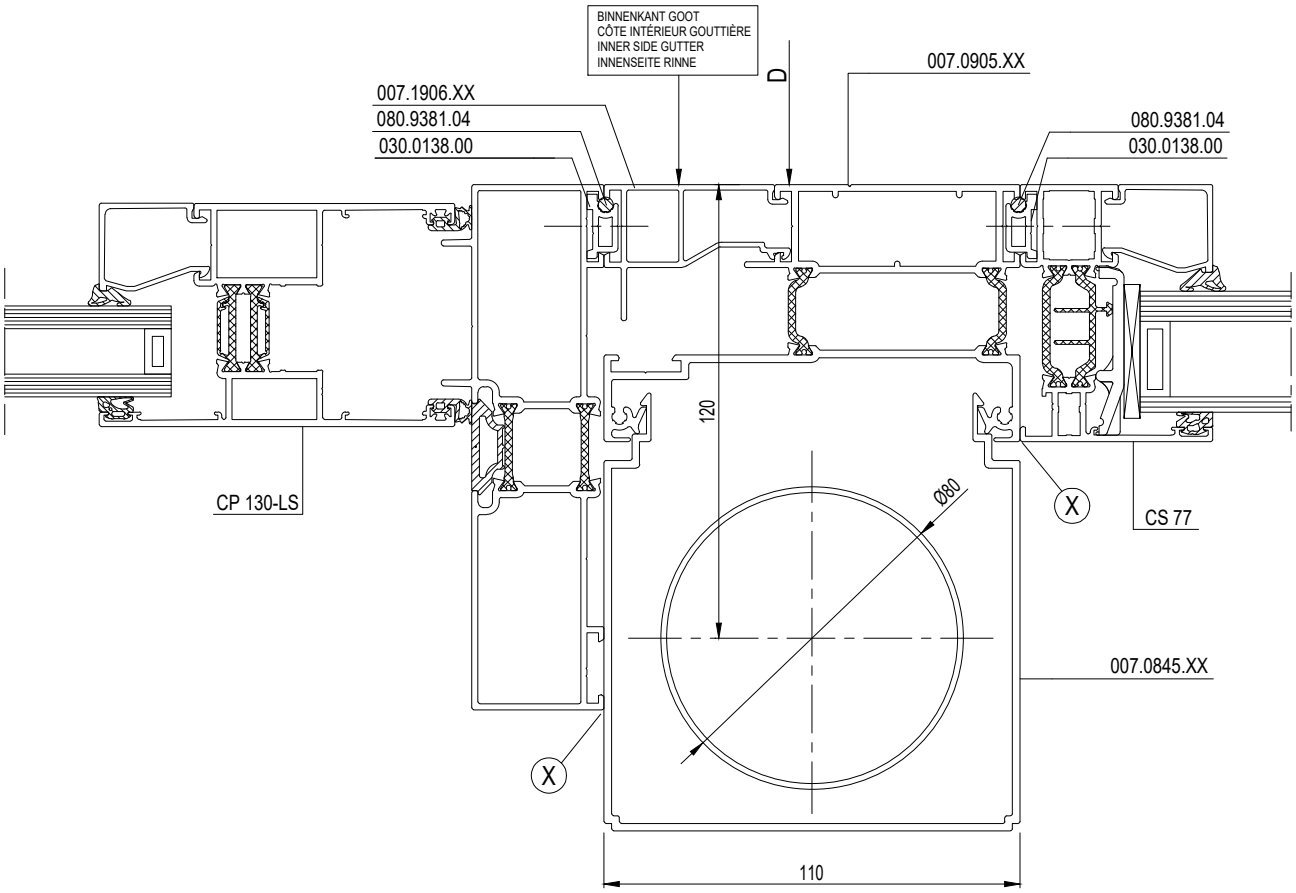

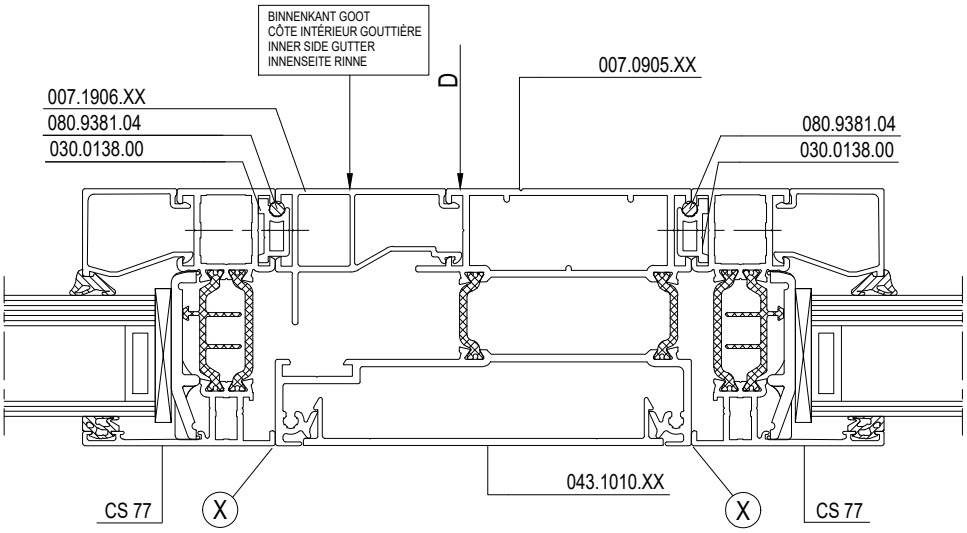

D0069384

D

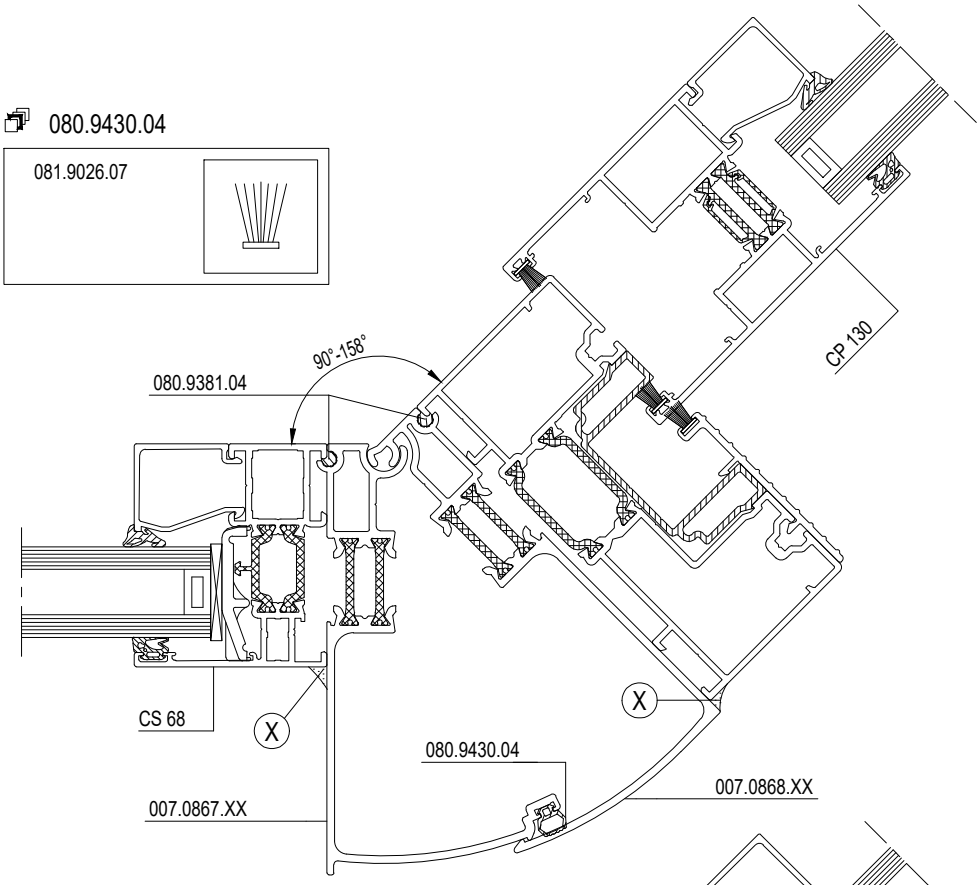
080.9430.04
081.9026.07
90°-158°
080.9381.04
CP 130
CS 68
X
X
080.9430.04
007.0868.XX
007.0867.XX

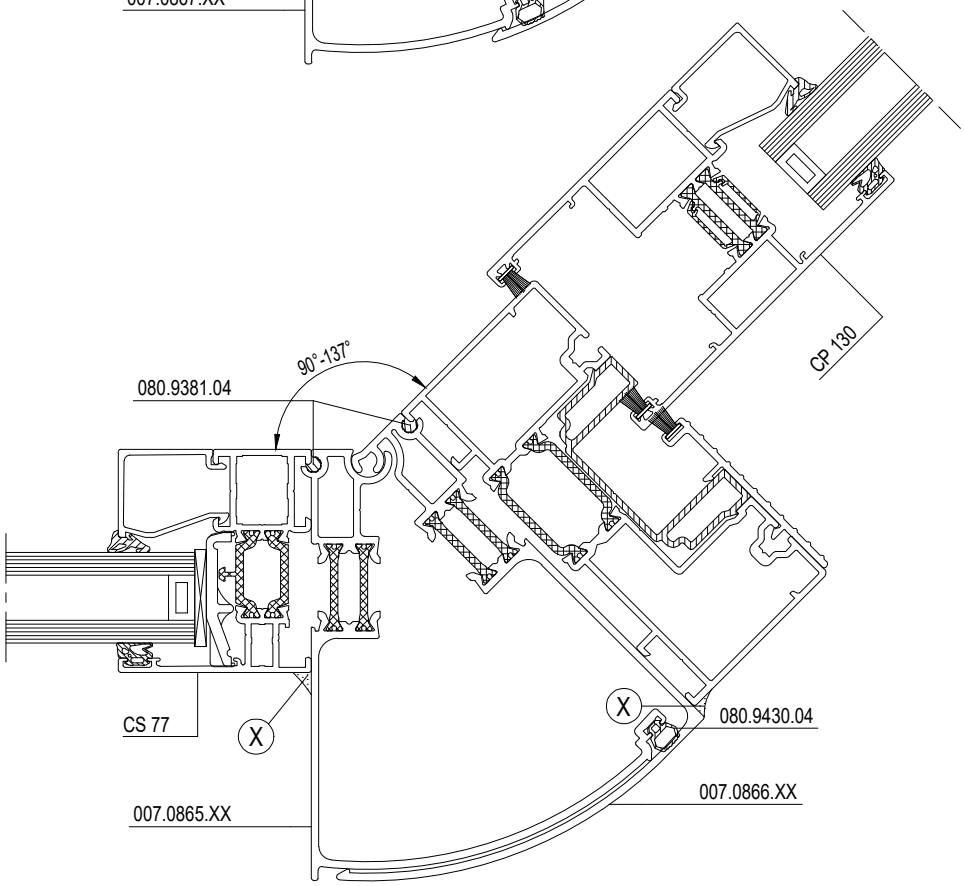
90°-137°
080.9381.04
CP 130
CS 77
X
X
080.9430.04
007.0866.XX
007.0865.XX

D

D0069923

A

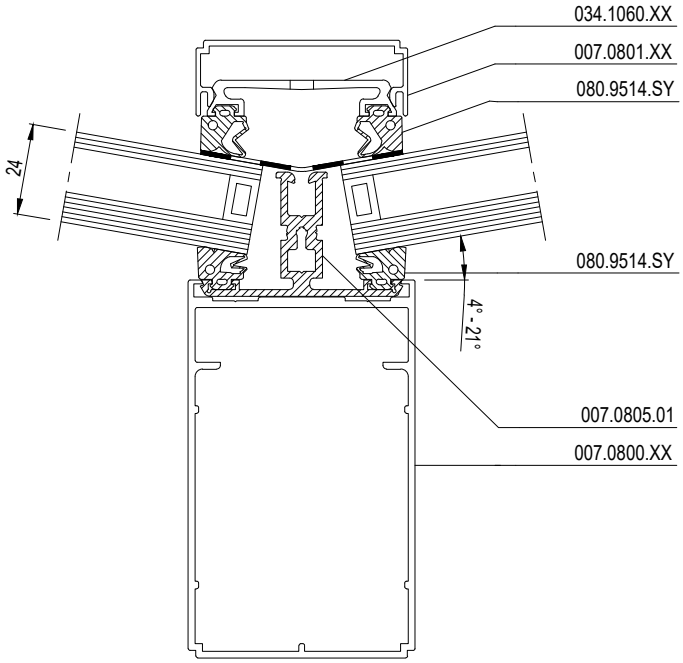

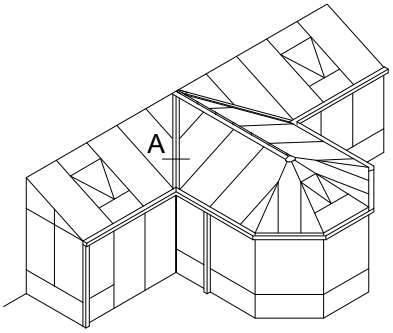

5° < α < 30°

D0070123

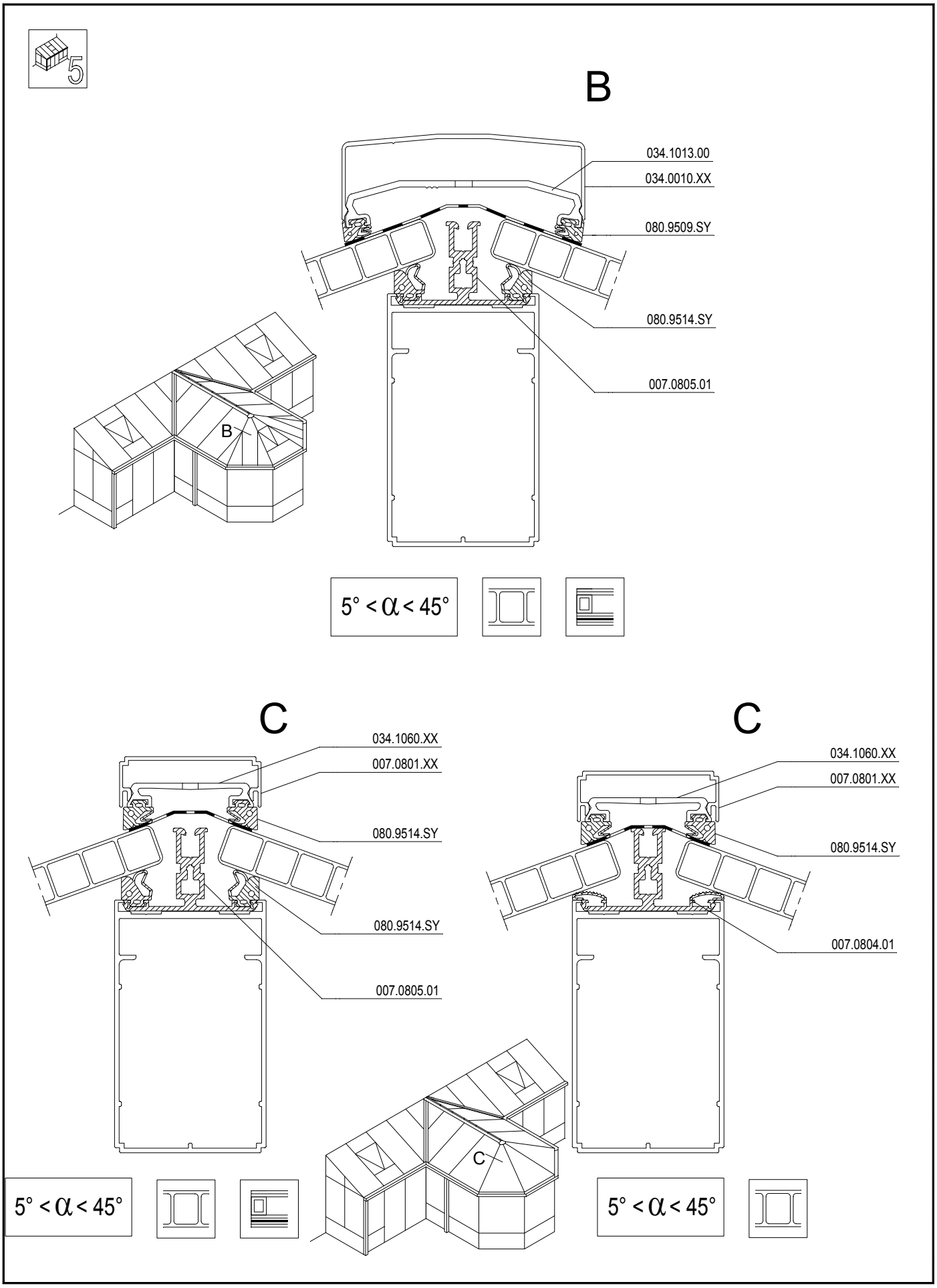
5
B
034.1013.00
034.0010.XX
080.9509.SY
080.9514.SY
007.0805.01
B
5° < α < 45°
C
034.1060.XX
007.0801.XX
080.9514.SY
080.9514.SY
007.0805.01
C
034.1060.XX
007.0801.XX
080.9514.SY
007.0804.01
C
5° < α < 45°
5° < α < 45°
D0070124

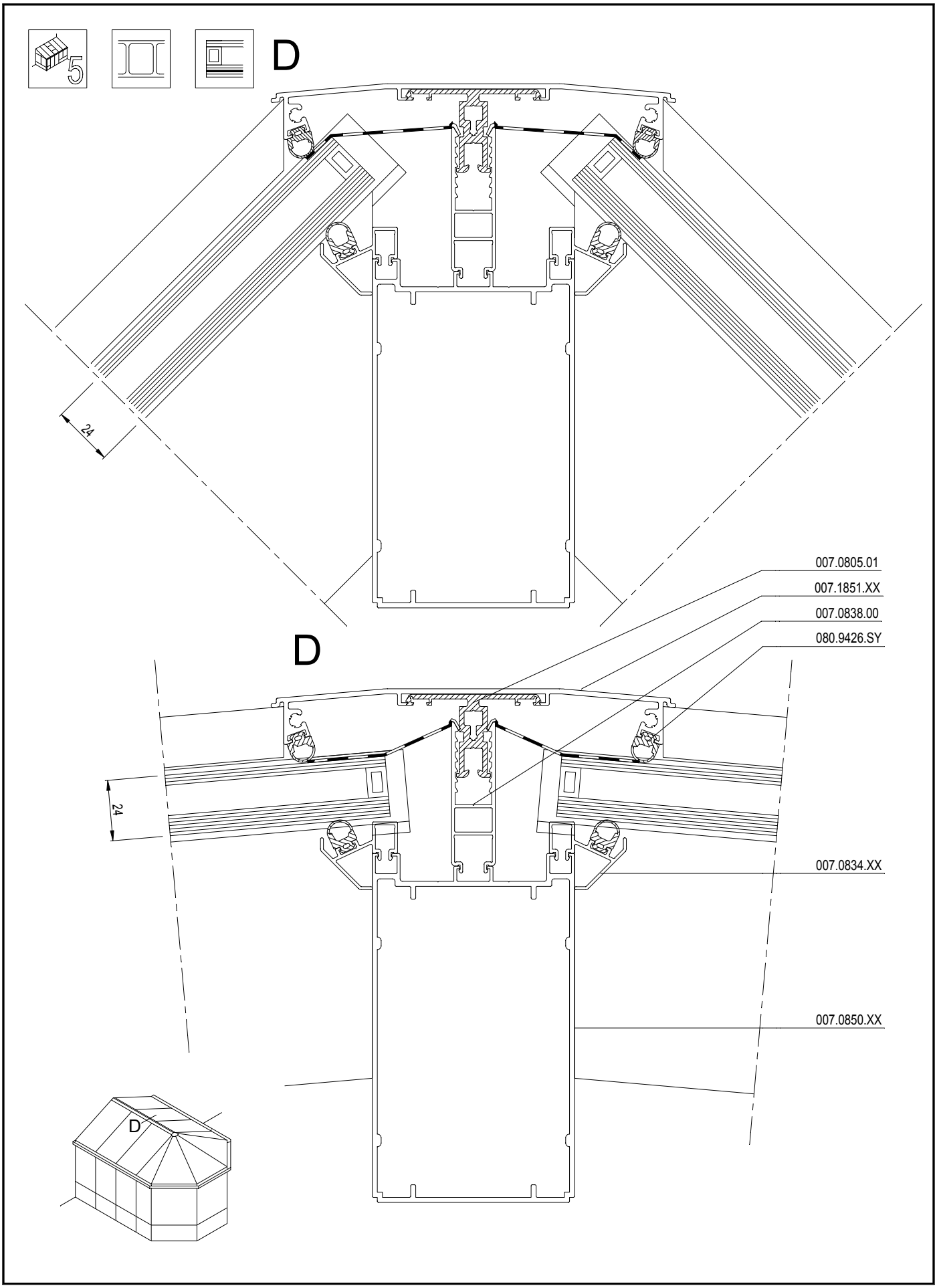
5
D
24
D
007.0805.01
007.1851.XX
007.0838.00
080.9426.SY
24
007.0834.XX
007.0850.XX
D
D00701125

A

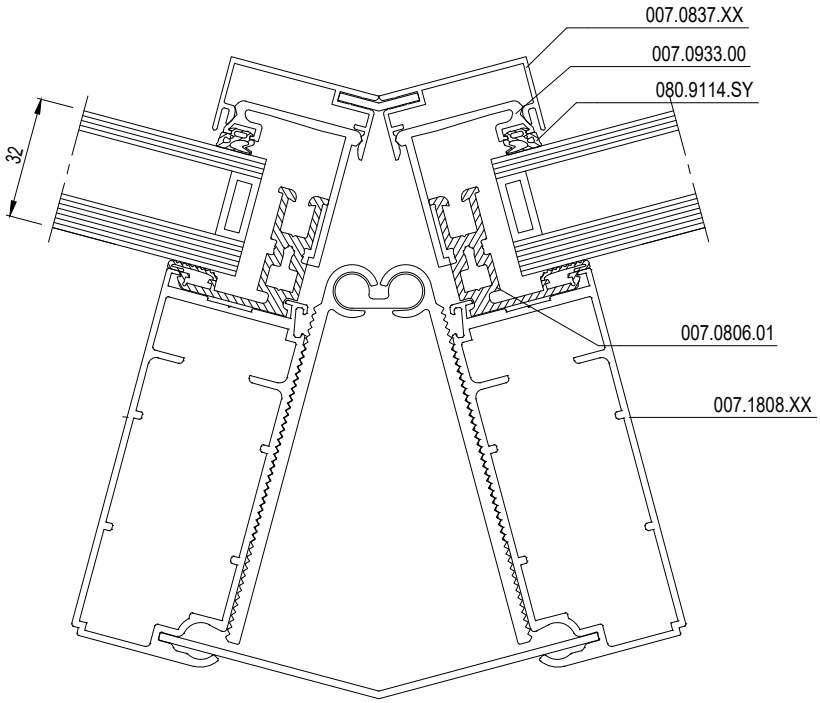

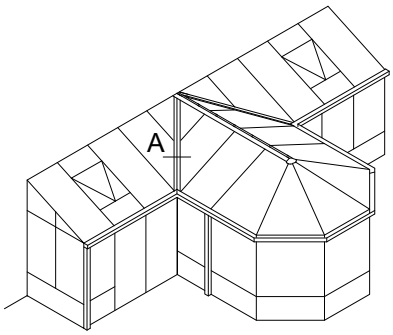

$5° < \alpha < 45°$

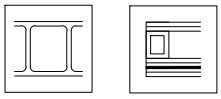

D

D0100970

C

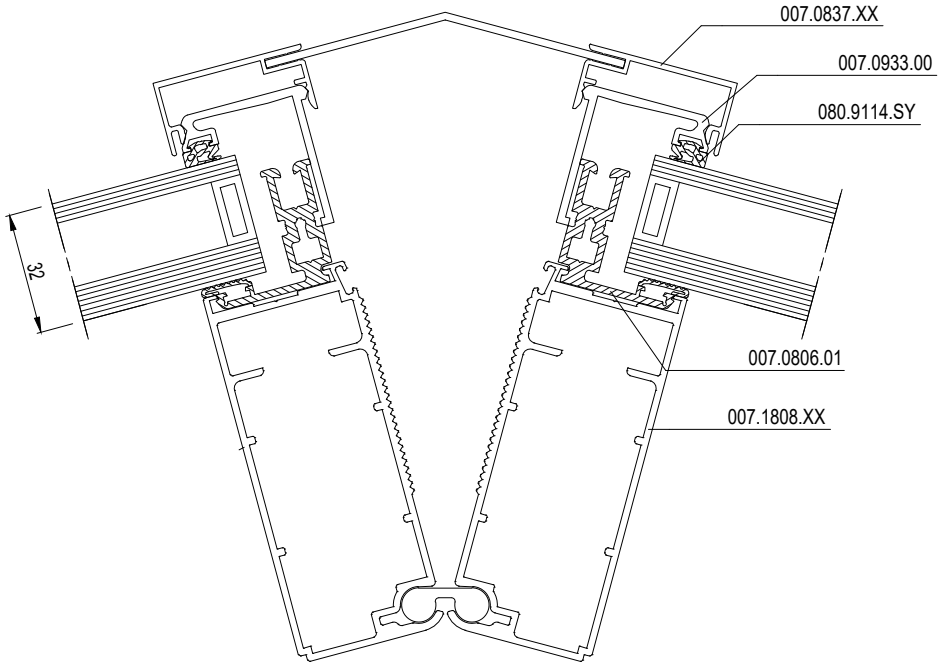

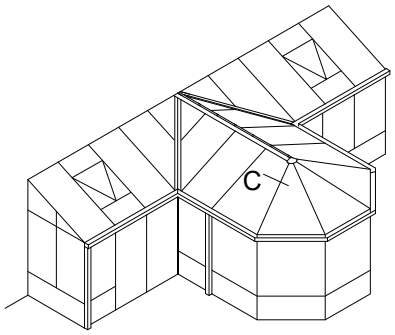

$5° < \alpha < 45°$

D

D0100971

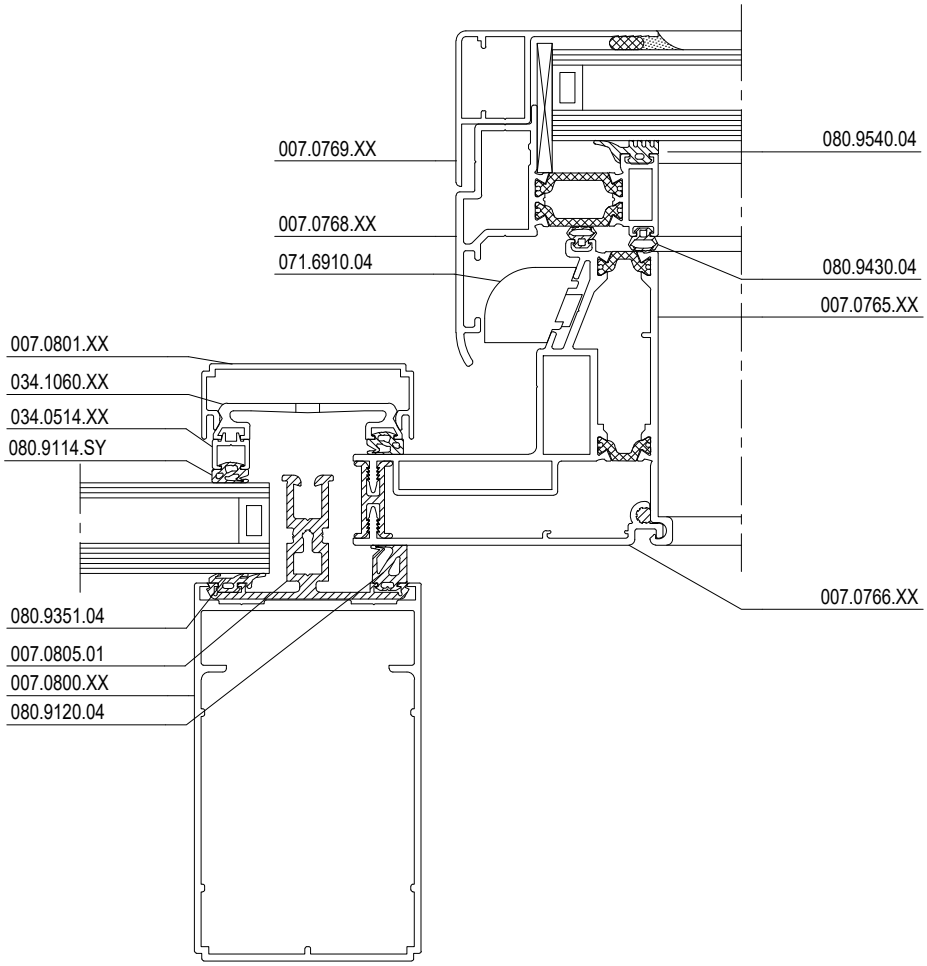
007.0769.XX
080.9540.04
007.0768.XX
071.6910.04
080.9430.04
007.0765.XX
007.0801.XX
034.1060.XX
034.0514.XX
080.9114.SY
007.0766.XX
080.9351.04
007.0805.01
007.0800.XX
080.9120.04

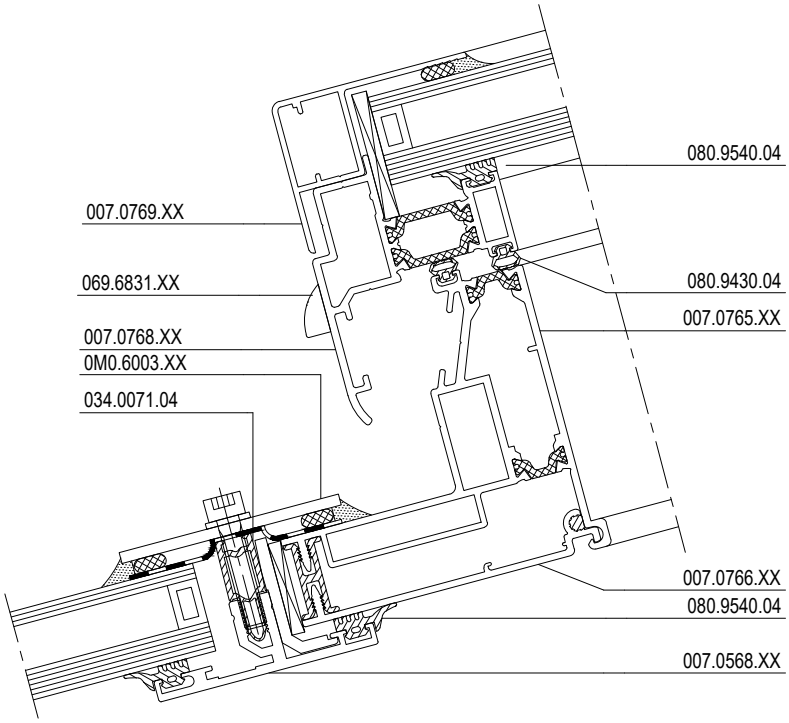
080.9540.04
007.0769.XX
069.6831.XX
080.9430.04
007.0765.XX
007.0768.XX
0M0.6003.XX
034.0071.04
007.0766.XX
080.9540.04
007.0568.XX

D

D0069367

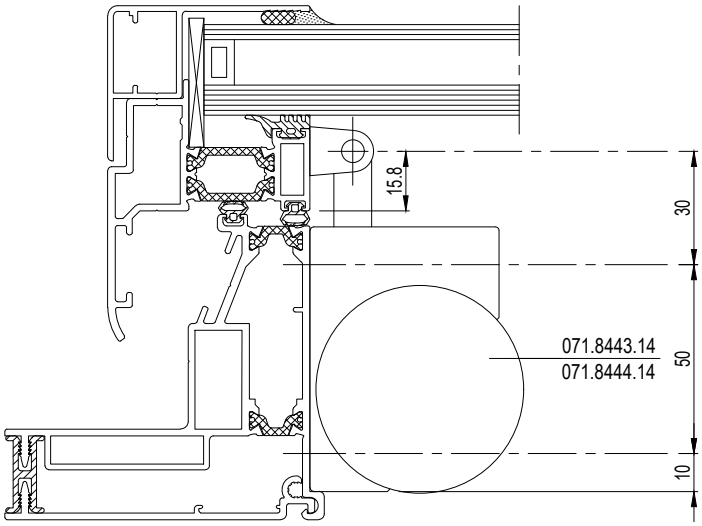

BEVESTIGING GLASLAT
FIXATION PARCLOSE
FIXATION GLAZING BEAD
BEFESTIGUNG GLASLEISTE

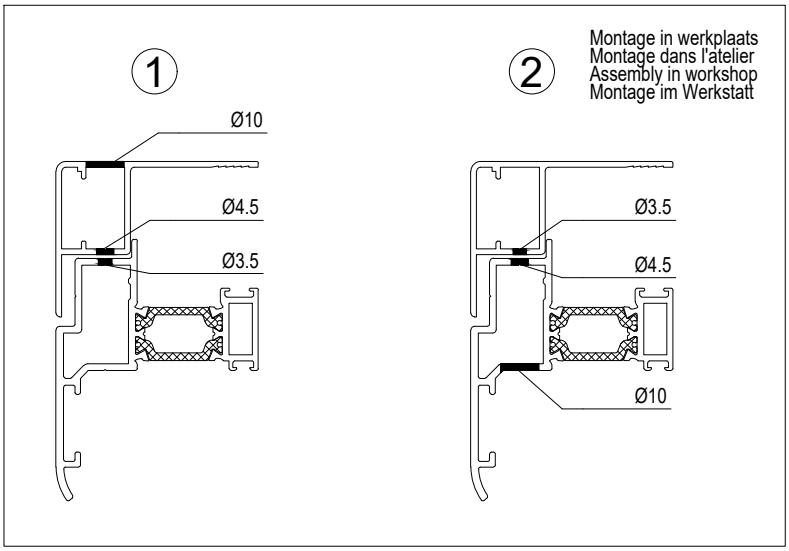

D

D0069379

E

Reynaers Aluminium

Werktekeningen

Coupes et débits

Work drawings

Werkzeichnungen

BEREKENING LIGGERS EN ZIJKANT
CALCULATION CHEVRONS ET FACADE LATERALE
CALCULATION RAFTERS AND SIDE WALL
BERECHNUNG DACHSPARREN UND SEITENWAND

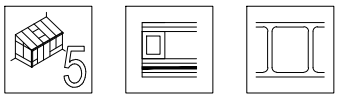

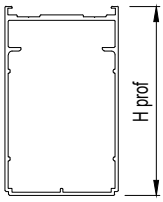

	H prof
007.0800.XX	100mm
007.0802.XX	70mm
007.0803.XX	100mm
007.0800.XX	100mm
007.0827.XX	98mm
007.0797.XX	100mm
007.0798.XX	120mm
007.0799.XX	150mm

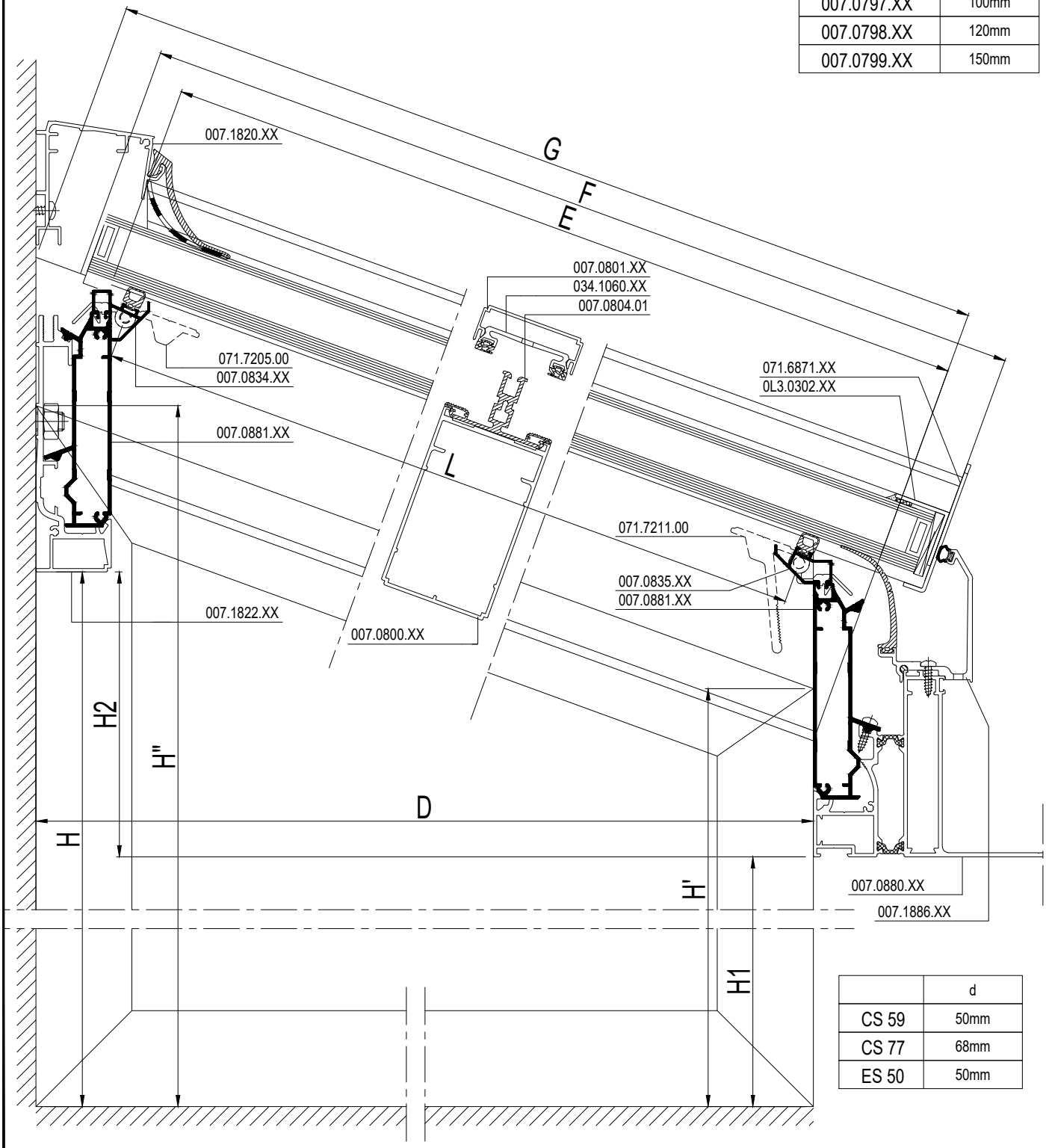

	d
CS 59	50mm
CS 77	68mm
ES 50	50mm

schaal - échelle
Maßstab - scale
1/3

D0069799

E

$$\alpha = ARCTAN\left(\frac{(H2-21)}{(D-55)}\right)$$

$$H2 = (D-55)\times TAN\alpha + 21$$

$$L = \frac{(D-55)}{COS\alpha}$$

$$L = \frac{(H2-21)}{SIN\alpha}$$

$$E = L + \frac{15}{COS\alpha} + h(prof)\times TAN\alpha$$

$$F = L + \frac{85}{COS\alpha} + \frac{20}{COS\alpha}$$

$$G = E + \frac{40}{COS\alpha}$$

$$H' = H1 + 156 - \frac{60.2}{COS\alpha} - 7.5\times TAN\alpha$$

$$H'' = H + 135 - \frac{60.2}{COS\alpha} + 47.5\times TAN\alpha$$

$$H'' = H' + D\times TAN\alpha$$

*

CS 59	B+(2x5.5)
CS 77	B-(2x12.5)
ES 50	B+(2x5.5)

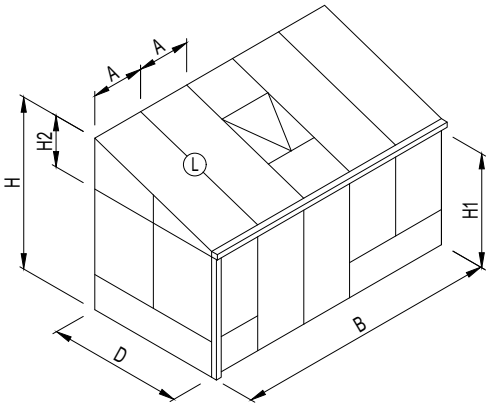

			#	Lm	
007.0800.XX		α α	-	E	43.C. ...
007.0804.01			-	F	43.C. ...
034.1060.XX			-	---	43.C. ...
007.0801.XX		α	-	---	43.C. ...
007.0827.XX		α α	-	G	43.C. ...
007.0806.01			-	F	43.C. ...
007.0880.XX			-	B+3	43.C. ...
007.0881.XX			-	B-47	43.C. ...
			-	B-(2xd)	
007.0882.XX			-	B+3	43.C. ...
007.1822.XX			-	B-(2xd)	43.C. ...
007.0835.XX			-	A-60	43.C. ...
007.0834.XX			-	A-60	43.C. ...
007.1820.XX			-	*	43.C. ...
017.0593.XX			-	A-31	43.C. ...
007.1886.XX 5° < α < 25°			-	B+3	43.C. ...
007.1885.XX 25° < α < 45°			-	B+3	43.C. ...
0L3.0302.XX			-	A-24	43.C. ...

007.0880.XX

007.0878.XX			-	B+3	43.C. ...
007.0879.04			-	B+3	43.C. ...
0I7.0880.XX			-	B-47	43.C. ...

E

D0069799

BEREKENING LIGGERS EN ZIJKANT
CALCULATION CHEVRONS ET FACADE LATERALE
CALCULATION RAFTERS AND SIDE WALL
BERECHNUNG DACHSPARREN UND SEITENWAND

5° < α < 45°

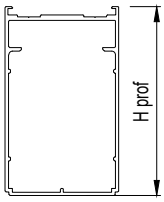

	H prof
007.0800.XX	100mm
007.0802.XX	70mm
007.0803.XX	100mm
007.0800.XX	100mm
007.0827.XX	98mm
007.0797.XX	100mm
007.0798.XX	120mm

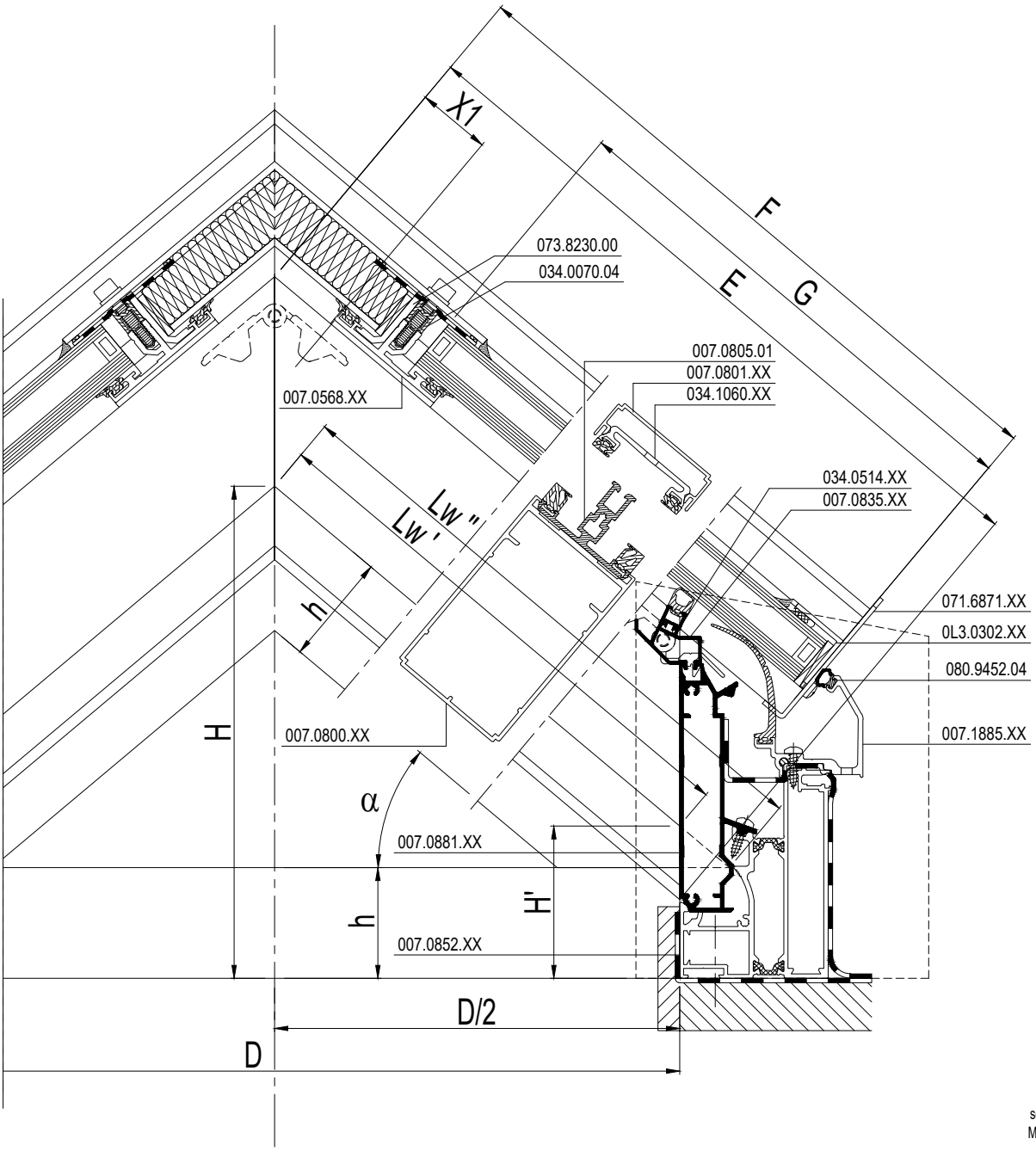

schaal - échelle
Maßstab - scale
1/3

D0069802

E

5° < α < 45°

$$H' = 30.7 + {}^{30.3}\!/_{COS\alpha}$$

$$H = H' + \left({}^{D}\!/_{2} \times TAN\alpha\right)$$

$$\alpha = ARCTAN\left(\frac{H - H'}{{}^{D}\!/_{2}}\right)$$

$$Lw' = \frac{{}^{D}\!/_{2}}{COS\alpha}$$

$$Lw'' = Lw' + \frac{H' - h}{SIN\alpha}$$

$$E = \frac{{}^{D}\!/_{2}}{COS\alpha} + \left(Hprof \times TAN\alpha\right)$$

$$G = F - 72$$

$$X1 = 23 + (TAN\alpha \times 13.8)$$

	F	
5°	Lw' + 63mm	007.1886.XX 5° < α < 25°
10°	Lw' + 62mm	
15°	Lw' + 60mm	
20°	Lw' + 58mm	
25°	Lw' + 55mm	

	F	
25°	Lw' + 67.5mm	007.1885.XX 25° < α < 45°
30°	Lw' + 66mm	
35°	Lw' + 64.5mm	
40°	Lw' + 62mm	
45°	Lw' + 59.5mm	

			#	Lm	☞
007.0800.XX		α α	-	E	43.C. ...
007.0805.01			-	F	43.C. ...
034.1060.XX			-	---	43.C. ...
007.0801.XX		α	-	---	43.C. ...
007.0827.XX		α α	-	E	43.C. ...
007.0807.01			-	F	43.C. ...
007.0852.XX			-	B+3	43.C. ...
007.1886.XX 5° < α < 25°			-	B+3	43.C. ...
007.1885.XX 25° < α < 45°			-	B+3	43.C. ...
007.0881.XX			-	B-47	43.C. ...
034.0514.XX			-	A-60	43.C. ...
007.0835.XX			-	A-60	43.C. ...
034.0070.04			-	A-74	43.C. ...
007.0568.XX			-	A-24	43.C. ...
0L3.0302.XX			-	A-24	43.C. ...

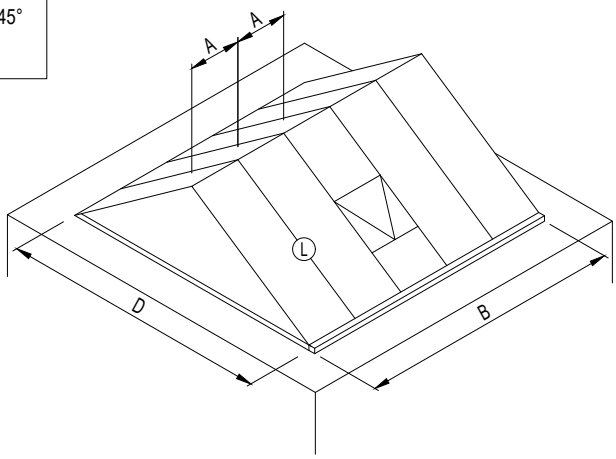

E

D0069802

5° < α < 45°

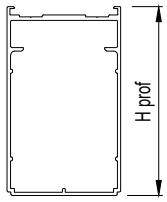

	H prof
007.0800.XX	100mm
007.0802.XX	70mm
007.0803.XX	100mm
007.0800.XX	100mm
007.0827.XX	98mm
007.0797.XX	100mm
007.0798.XX	120mm

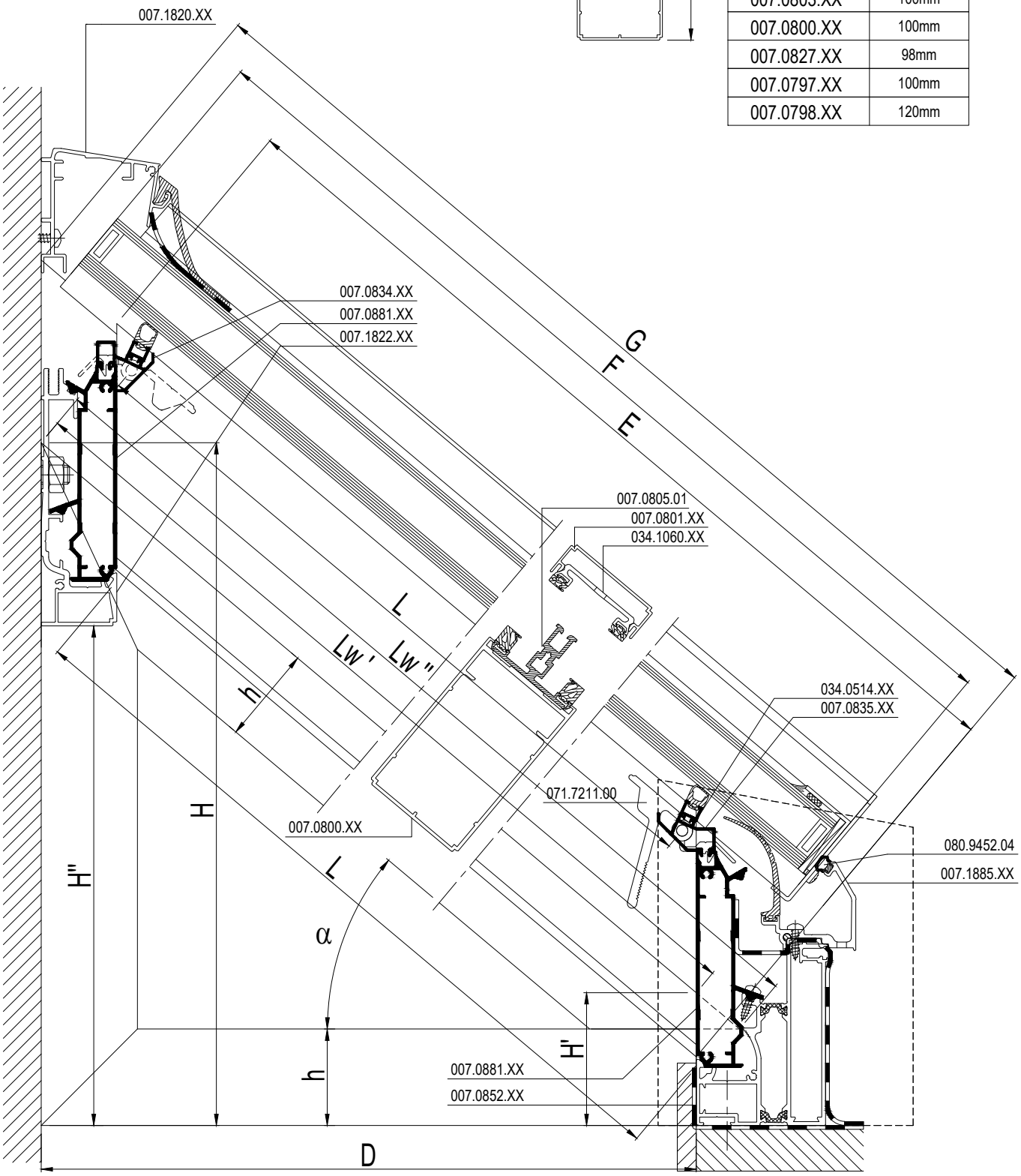

schaal - échelle
Maßstab - scale
1/3

D0069803

E

$5° < \alpha < 45°$

$$H' = 30.7 + {}^{30.3}\!/_{COS\alpha}$$

$$H = H' + (D \times TAN\alpha)$$

$$\alpha = ARCTAN\left(\frac{H - H'}{D}\right)$$

$$H'' = (D - 55) \times TAN\alpha + 21$$

$$Lw' = \frac{D}{COS\alpha}$$

$$Lw'' = Lw' + \frac{H' - h}{SIN\alpha}$$

$$L = {}^{(D-55)}\!/_{COS\alpha}$$

$$L = {}^{(H''-21)}\!/_{SIN\alpha}$$

$$E = L + {}^{15}\!/_{COS\alpha} + (Hprof \times TAN\alpha)$$

$$F = L + {}^{85}\!/_{COS\alpha} + {}^{20}\!/_{COS\alpha}$$

$$G = E + {}^{40}\!/_{COS\alpha}$$

			#	Lm	
007.0800.XX		α α	-	E	43.C. ...
007.0804.01			-	F	43.C. ...
034.1060.XX			-	---	43.C. ...
007.0801.XX		α	-	---	43.C. ...
007.0827.XX		α α	-	G	43.C. ...
007.0806.01			-	F	43.C. ...
007.0852.XX			-	B+3	43.C. ...
007.0881.XX			-	B-47	43.C. ...
			-	B-(2xd)	
007.1886.XX 5° < α < 25°			-	B+3	43.C. ...
007.1885.XX 25° < α < 45°			-	B+3	43.C. ...
007.1822.XX			-	B-(2xd)	43.C. ...
007.0835.XX			-	A-60	43.C. ...
007.0834.XX			-	A-60	43.C. ...
0L3.0302.XX			-	A-24	43.C. ...
007.1820.XX			-	*	43.C. ...

*

CS 59	B+(2x5.5)
CS 77	B-(2x12.5)
ES 50	B+(2x5.5)

	d
CS 59	50mm
CS 77	68mm
ES 50	50mm

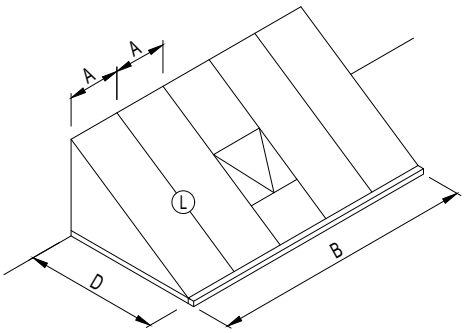

E

D0069803

	d
CS 59	50mm
CS 77	68mm
ES 50	50mm

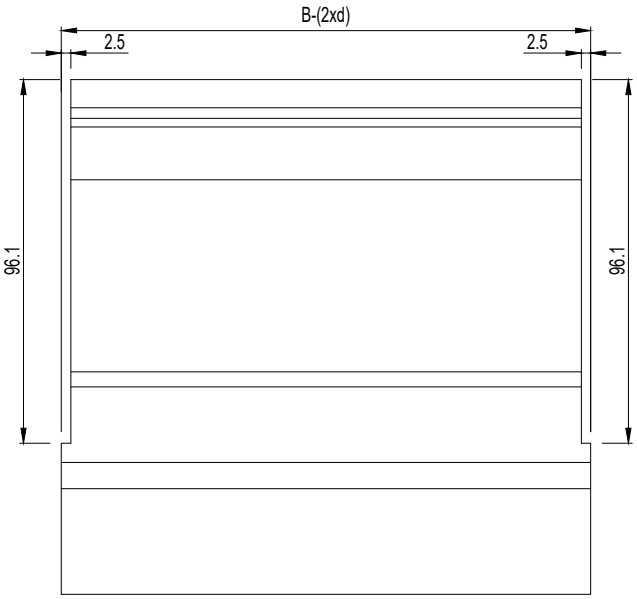

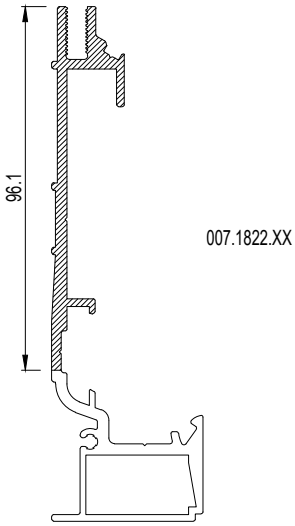

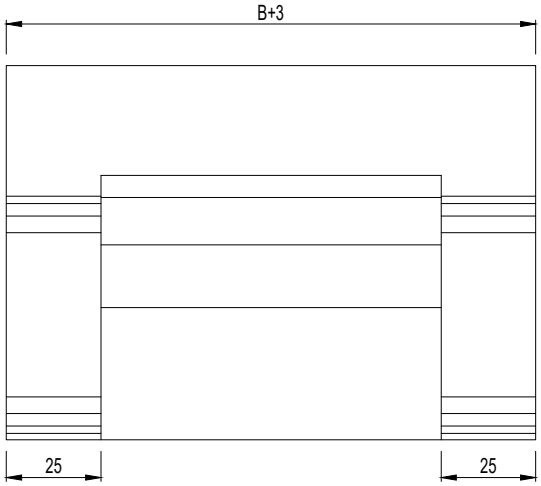

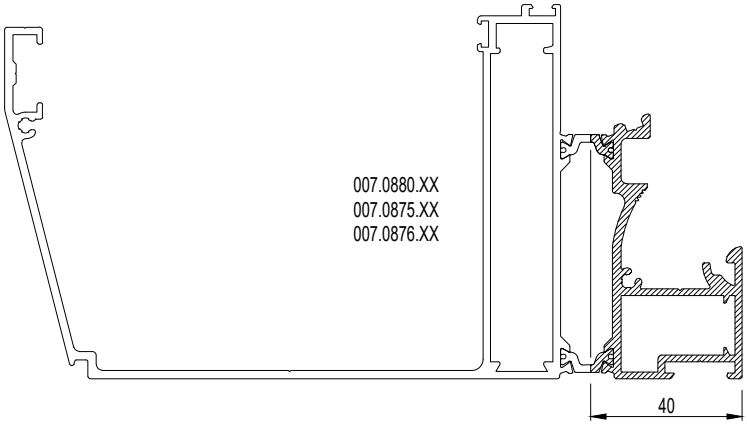

E

schaal - échelle
scale - Maßstab
1/2

D0069804

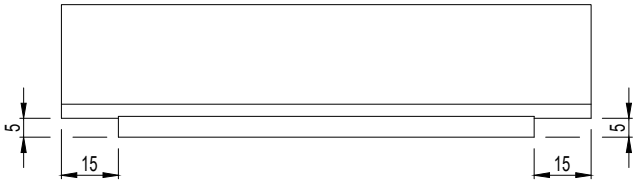

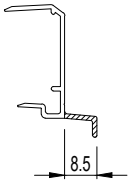

017.0593.XX
017.0595.XX
017.0597.XX
017.0598.XX
017.0596.XX

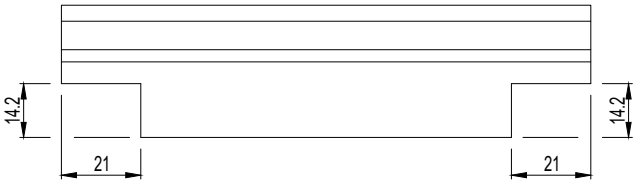

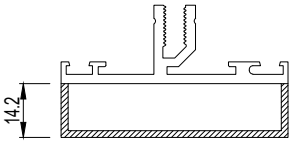

034.0668.XX

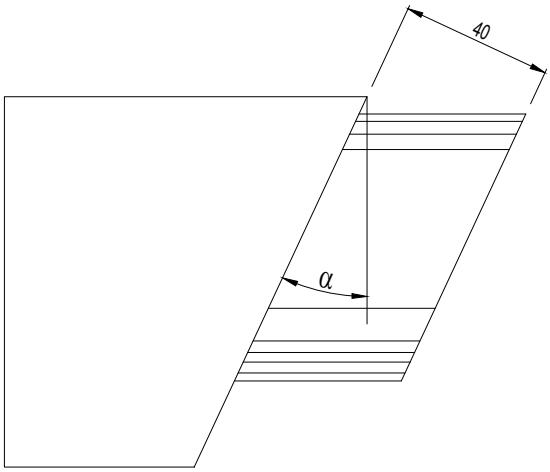

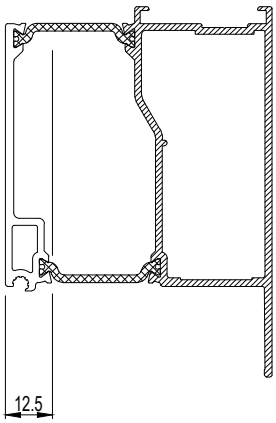

007.0827.XX
007.0827.XX

schaal - échelle
scale - Maßstab
1/2

D0069804

E

MUURAANSLUITING
RACCORD MURAL
WALL SECTION
MAUERANSCHLUSS

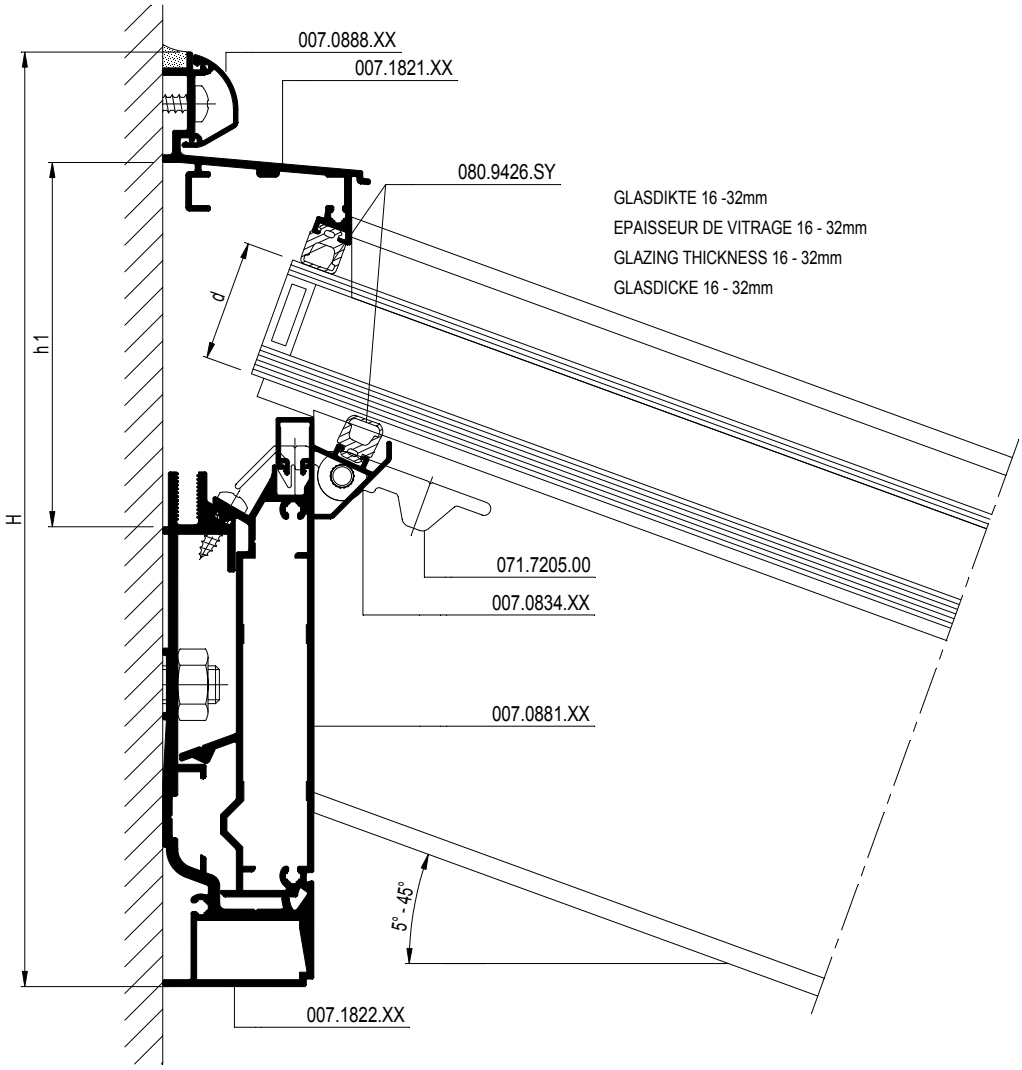

d = 16 mm

	h 1	H
5°	74 mm	224 mm
10°	75 mm	225 mm
15°	76 mm	226 mm
20°	78 mm	228 mm
25°	80 mm	230 mm
30°	83 mm	233 mm
35°	86 mm	236 mm
40°	89 mm	239 mm
45°	94 mm	244 mm

d = 20 mm

	h 1	H
5°	78 mm	228 mm
10°	79 mm	229 mm
15°	80 mm	230 mm
20°	82 mm	232 mm
25°	84 mm	234 mm
30°	87 mm	237 mm
35°	90 mm	240 mm
40°	94 mm	244 mm
45°	99 mm	249 mm

d = 25 mm

	h 1	H
5°	83 mm	233 mm
10°	84 mm	234 mm
15°	86 mm	236 mm
20°	88 mm	238 mm
25°	90 mm	240 mm
30°	93 mm	243 mm
35°	97 mm	247 mm
40°	101 mm	251 mm
45°	107 mm	257 mm

d = 32 mm

	h 1	H
5°	90 mm	240 mm
10°	91 mm	241 mm
15°	93 mm	243 mm
20°	95 mm	245 mm
25°	98 mm	248 mm
30°	101 mm	251 mm
35°	105 mm	255 mm
40°	110 mm	260 mm
45°	116 mm	266 mm

schaal - échelle
scale - Maßstab
1/2

D0069805

MUURAANSLUITING
RACCORD MURAL
WALL SECTION
MAUERANSCHLUSS

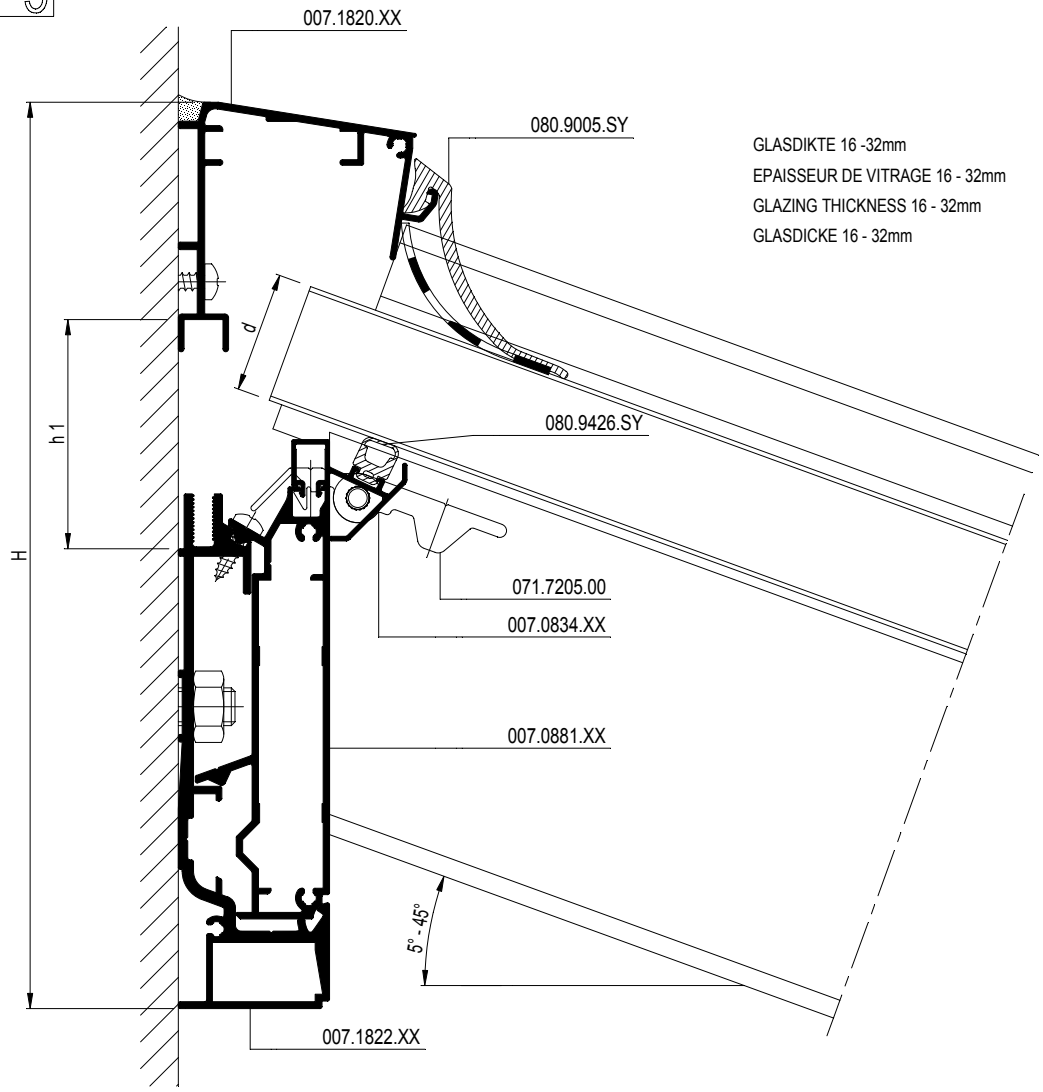

d = 16 mm

	h 1	H
5°	54 mm	222 mm
10°	56 mm	224 mm
15°	59 mm	227 mm
20°	63 mm	231 mm
25°	67 mm	235 mm
30°	72 mm	240 mm
35°	78 mm	246 mm
40°	86 mm	254 mm
45°	95 mm	263 mm

d = 20 mm

	h 1	H
5°	58 mm	226 mm
10°	60 mm	228 mm
15°	63 mm	231 mm
20°	67 mm	235 mm
25°	71 mm	239 mm
30°	77 mm	245 mm
35°	83 mm	251 mm
40°	91 mm	259 mm
45°	100 mm	268 mm

d = 25 mm

	h 1	H
5°	63 mm	231 mm
10°	66 mm	234 mm
15°	69 mm	237 mm
20°	72 mm	242 mm
25°	77 mm	247 mm
30°	82 mm	250 mm
35°	89 mm	257 mm
40°	97 mm	265 mm
45°	107 mm	275 mm

d = 32 mm

	h 1	H
5°	70 mm	238 mm
10°	73 mm	241 mm
15°	76 mm	244 mm
20°	80 mm	248 mm
25°	85 mm	253 mm
30°	90 mm	258 mm
35°	98 mm	266 mm
40°	106 mm	274 mm
45°	117 mm	285 mm

schaal - échelle
scale - Maßstab
1/2

D0069805

E

BEVESTIGINGSMIDDELEN
MOYENS DE FIXATION
FIXINGS
BEFESTIGUNGSMITTEL

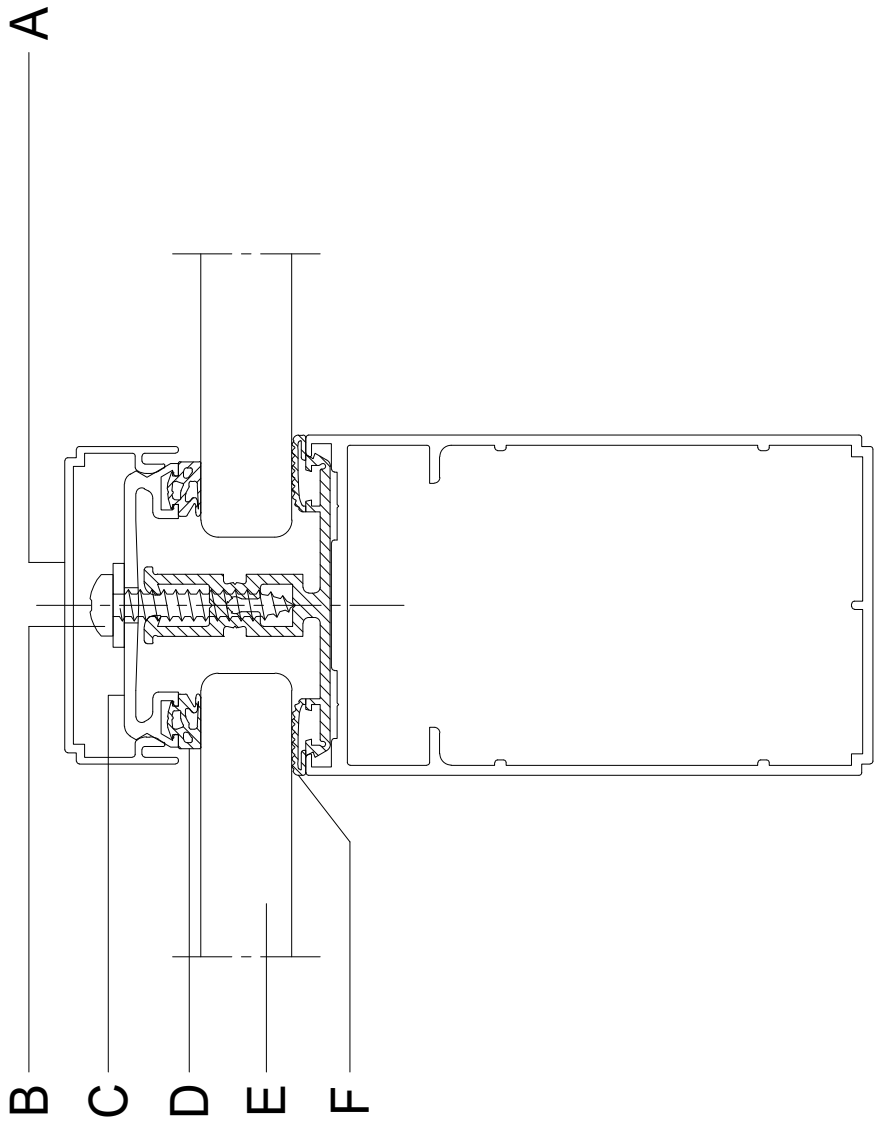

A	007.0797.XX 007.0798.XX 007.0800.XX	007.0802.XX 007.0803.XX 007.0813.XX	007.0799.XX																
B	073.8201.01 + 052.5342.--												073.8201.01 + 052.5301.--						052.5302.-- + 073.8201.01
C	034.1060.XX																		
D	080.9116.04	080.9114.SY	080.9114.SY	080.9114.SY	080.9116.04	080.9114.SY	080.9114.SY	080.9114.SY	080.9114.SY	080.9114.SY	080.9114.SY	080.9114.SY	080.9114.SY	080.9114.SY	080.9114.SY	080.9114.SY	080.9114.SY	080.9114.SY	080.9114.SY
E	6	8	10	12	14	16	18	20	22	24	26	28	30	32	34				
F	080.9120.04 + 007.0805.01					080.9351.04 + 007.0805.01 OF-OU-ODER-OR 007.0804.01													

D0070595

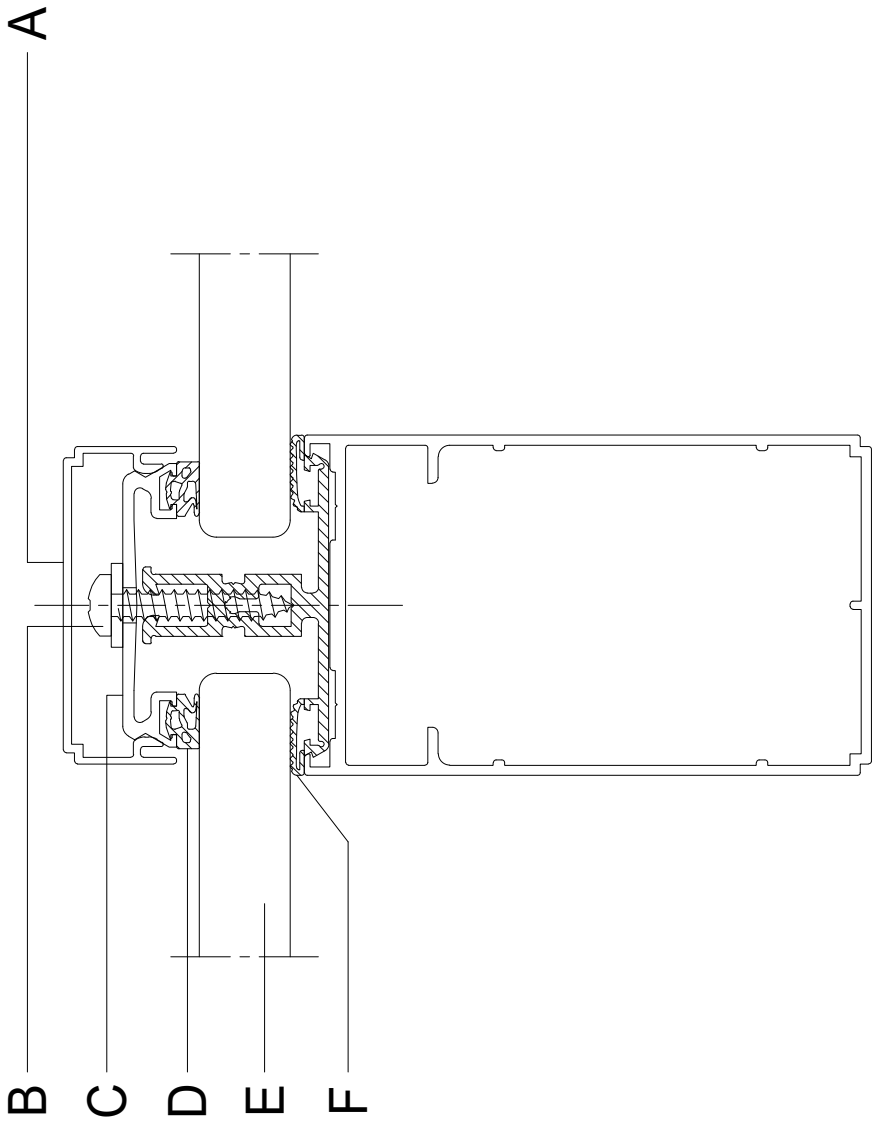

A	007.0797.XX 007.0798.XX 007.0800.XX	007.0802.XX 007.0803.XX 007.0813.XX	007.0799.XX																
B	073.8201.01 + 052.5302.--																		
C	034.1060.XX																		
D	080.9114.SY	080.9114.SY	080.9114.SY	080.9114.SY	080.9114.SY	080.9114.SY	080.9114.SY	080.9114.SY	080.9114.SY	080.9114.SY	080.9114.SY	080.9114.SY	080.9114.SY	080.9114.SY	080.9114.SY	080.9114.SY	080.9114.SY	080.9114.SY	080.9114.SY
E	36	38	40	42	44	46	48	50	52	54	56	58	60	62	64	66	68		
F	080.9351.04 + 007.0805.01 OF-OU-ODER-OR 007.0804.01																		

D0070595

E

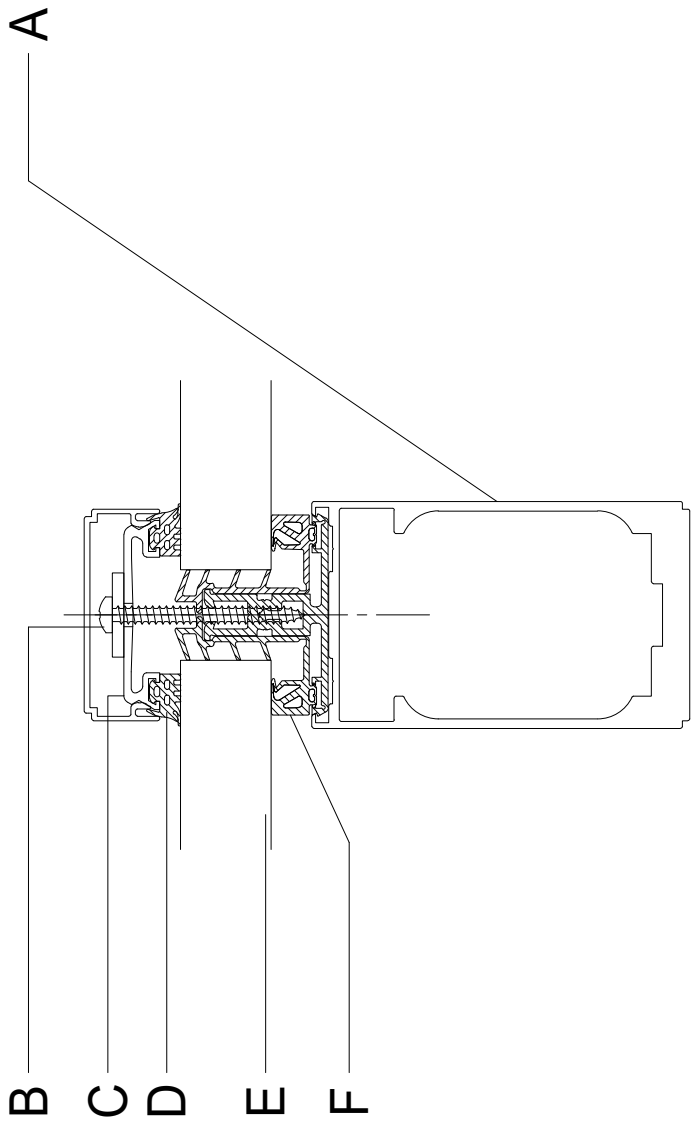

A	007.0797.XX 007.0798.XX 007.0800.XX	007.0802.XX 007.0803.XX 007.0813.XX	007.0799.XX		
B	073.8201.01 + 052.5302.--		073.8201.01 + 052.5323.--		
C	034.1060.XX				
D	080.9741.04	080.9740.04	080.9740.04	080.9742.04	080.9742.04
E	24	26	28	30	32	34
F	080.9008.04 + 007.0805.01				

schaal - échelle
scale - Maßstab
1/2

D0077743

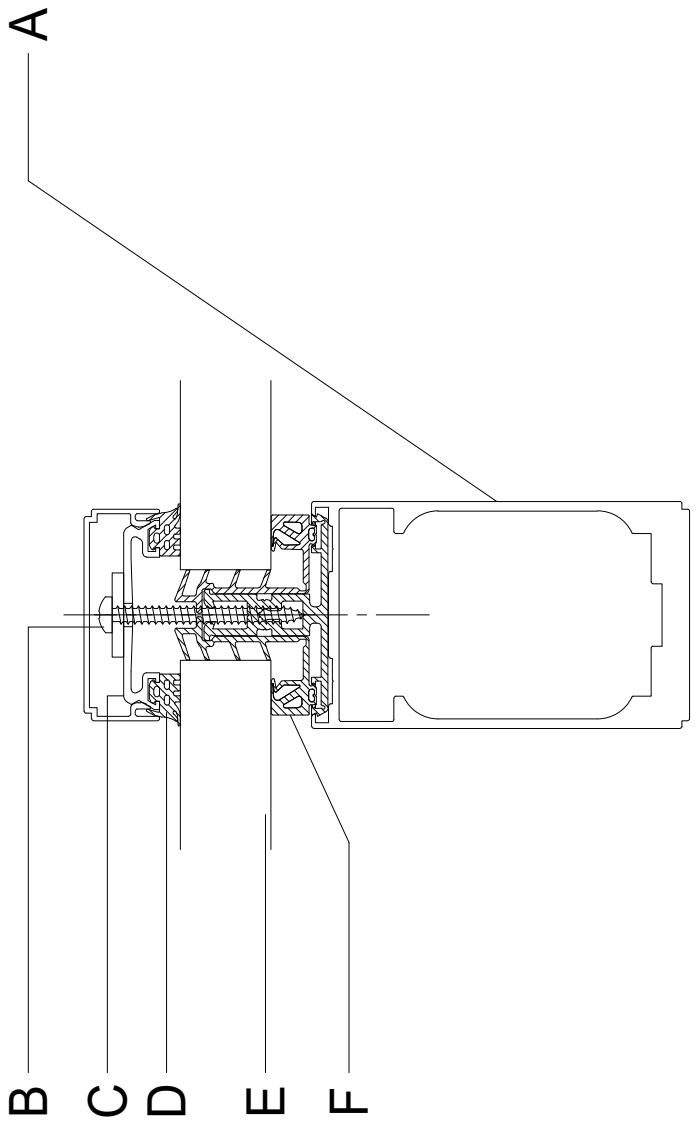

A	007.0797.XX 007.0798.XX 007.0800.XX	007.0802.XX 007.0803.XX 007.0813.XX	007.0799.XX																
B	073.8201.01 + 052.5323.--																		
C	034.1060.XX																		
D	080.9742.04	080.9742.04	080.9742.04	080.9742.04	080.9742.04	080.9742.04	080.9742.04	080.9742.04	080.9742.04	080.9742.04	080.9742.04	080.9742.04	080.9742.04	080.9742.04	080.9742.04	080.9742.04	080.9742.04	080.9742.04	080.9742.04
E	36	38	40	42	44	46	48	50	52	54	56	58	60	62	64	66	68		
F	080.9008.04 + 007.0805.01																		

schaal - échelle
scale - Maßstab
1/2

D0077743

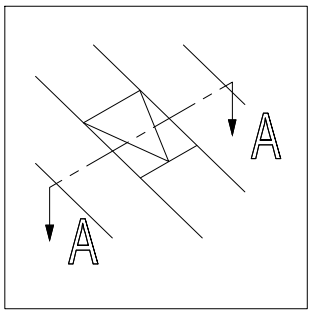

A - A

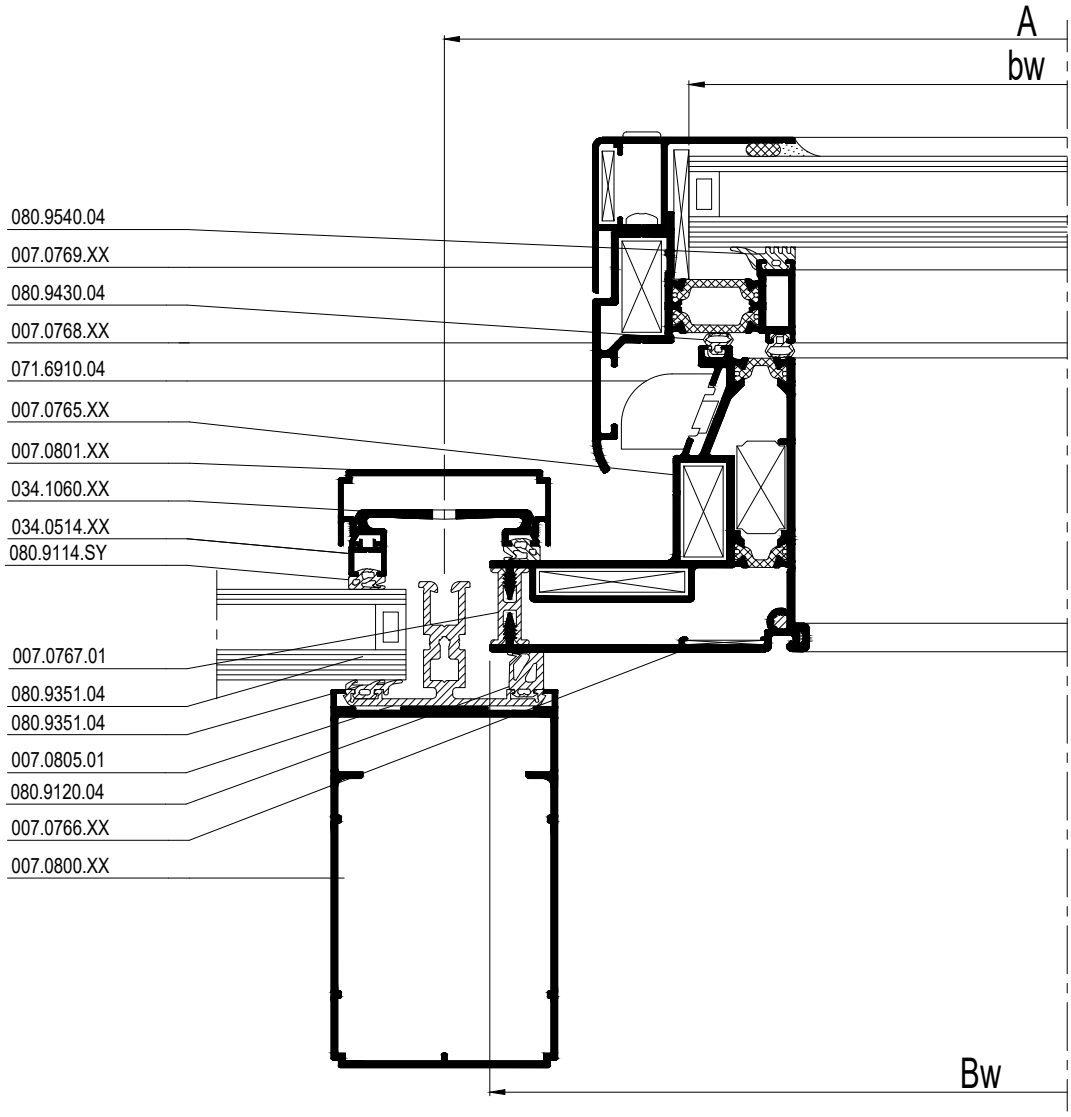

schaal - échelle
scale - Maßstab
1/2

D0004382

E

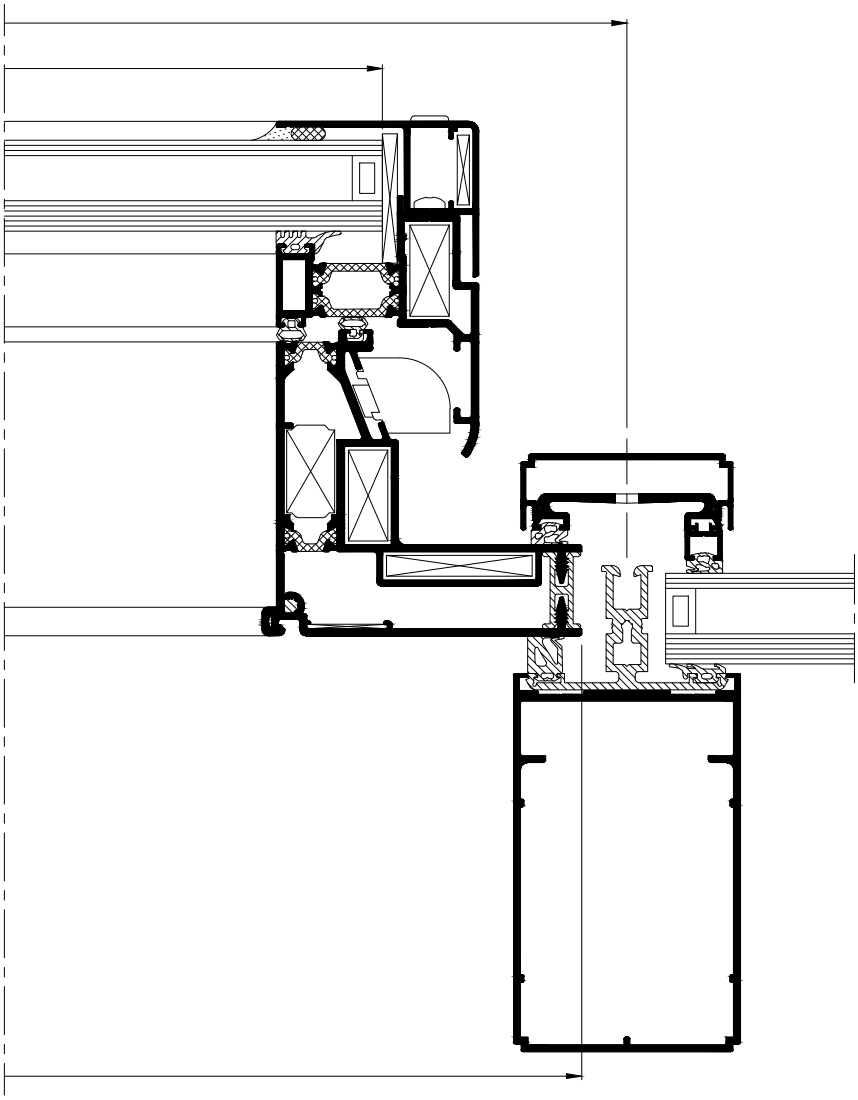

schaal - échelle
scale - Maßstab
1/2

D0004382

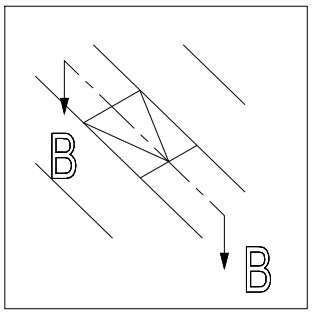

B - B

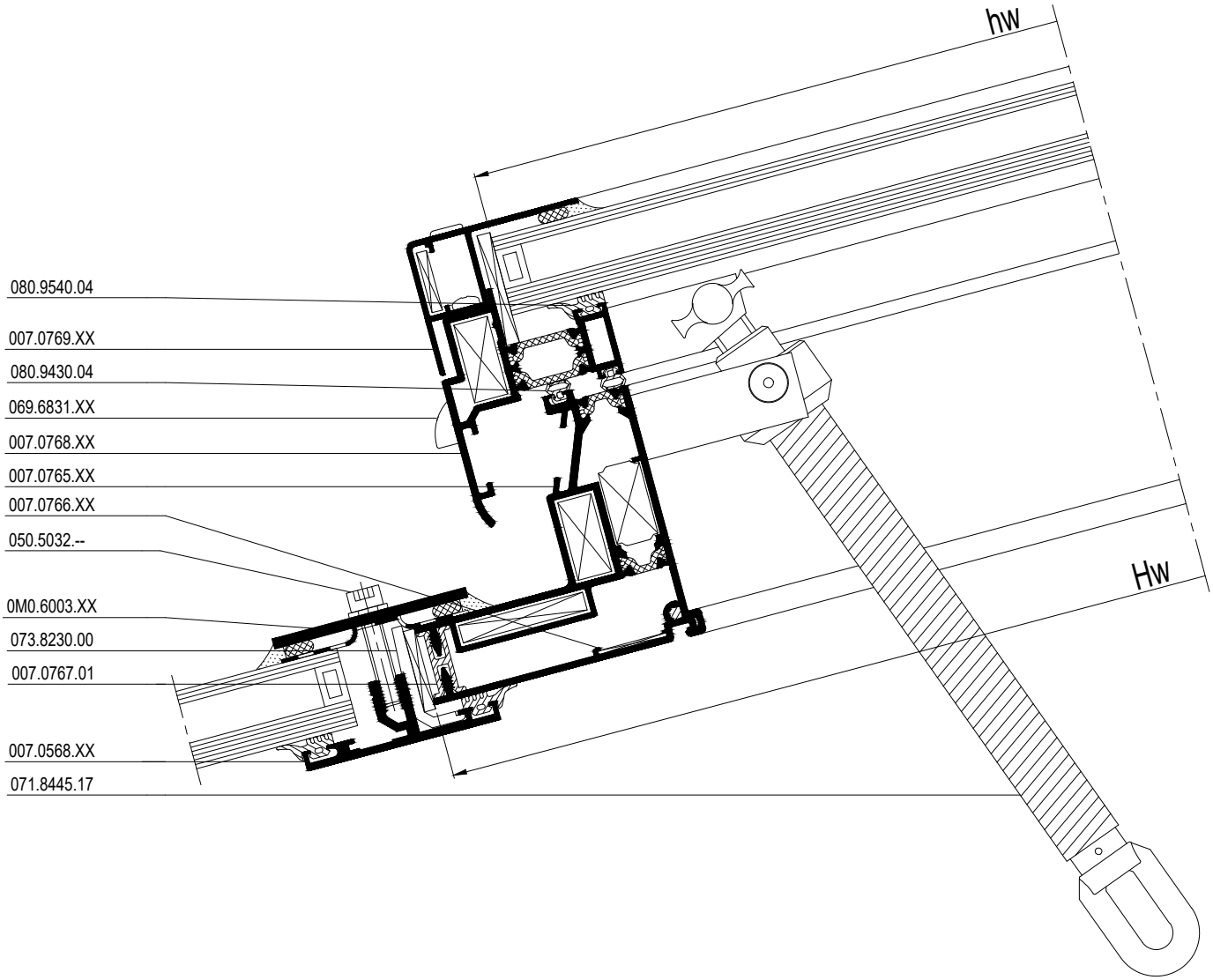

E

schaal - échelle
scale - Maßstab
1/2

D0004383

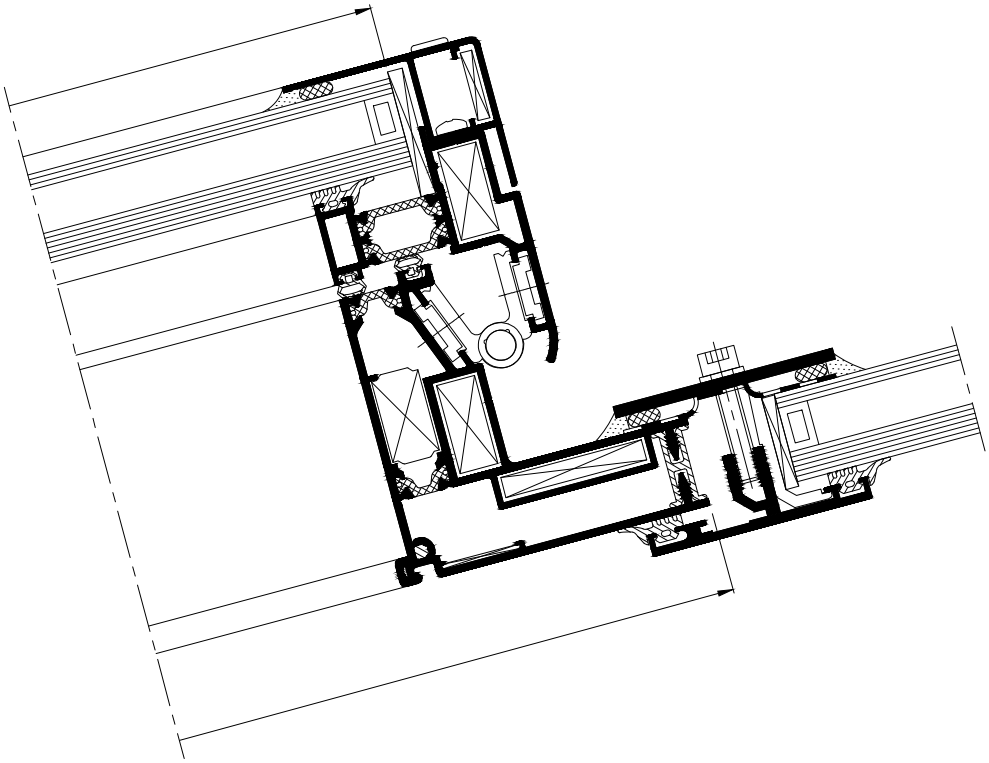

			#	Lm	
007.0765.XX			2	Bw	043W.C.156
007.0766.XX			2	Hw	
007.0767.01					
007.0768.XX			2	Bw-54.4	43W.C.157
			2	Hw-54.4	
007.0769.XX			2	Bw-54.4	43W.C.157
			2	Hw-54.4	

	--	or	--	or	097.0428.00

bw=Bw-108
hw=Hw-108

	#	
068.8810.00	8	43W.G.126
069.6628.04	4	43W.G.127
072.6427.00	4	43W.G.127
072.6395.04	4	43W.G.127
060.8723.--	4	43W.G.127
052.5315.--	min. 8	43W.G.164
065.6555.04	min. 8	43W.G.145
071.6547.17	2	43W.G.128
050.5110.--	8	43W.G.161
071.6910.04	2	43W.G.129
052.5315.--	2	43W.G.164
071.8445.17	1	43W.G.128
050.5161.--	4	43W.G.161
057.5711.--	4	43W.G.168
069.6831.XX	2	43W.G.145
080.9381.04	(2xbw)+(2xhw)	43W.G.141
080.9430.04	(4xbw)+(4xhw)	43W.G.139
080.9540.04	(2xbw)+(2xhw)	43W.G.136

schaal - échelle
scale - Maßstab
1/2

D0004383

E

VOORBEELD MAX. TOELAATBARE LENGTEN DAKRAMEN
EXEMPLE LONGUEURS MAX. ADMISSIBLE TABATIERES
EXAMPLE MAX. ADMISSIBLE LENGTHS ATTIC WINDOWS
BEISPIEL MAX. ZULAESSIGE LAENGEN DACHFENSTER

Maximale afmetingen dakraam onder eigengewicht + sneeuw
max. gewicht = 90 Kg.

Dimensions max. tabatière sous propre poids et neige
poids max. = 90 Kg.

Max. sizes attic window under self-weight and snow
max. weight = 90 Kg.

Maximalabmessungen Dachfenster unter Eigengewicht und Schnee
Maximalgewicht = 90 Kg.

Kettingmotor 071.8443.14 of 071.8444.14

Moteur électrique 071.8443.14 ou 071.8444.14

Chain motor 071.8443.14 or 071.8444.14

Kettenantrieb 071.8443.14 oder 071.8444.14

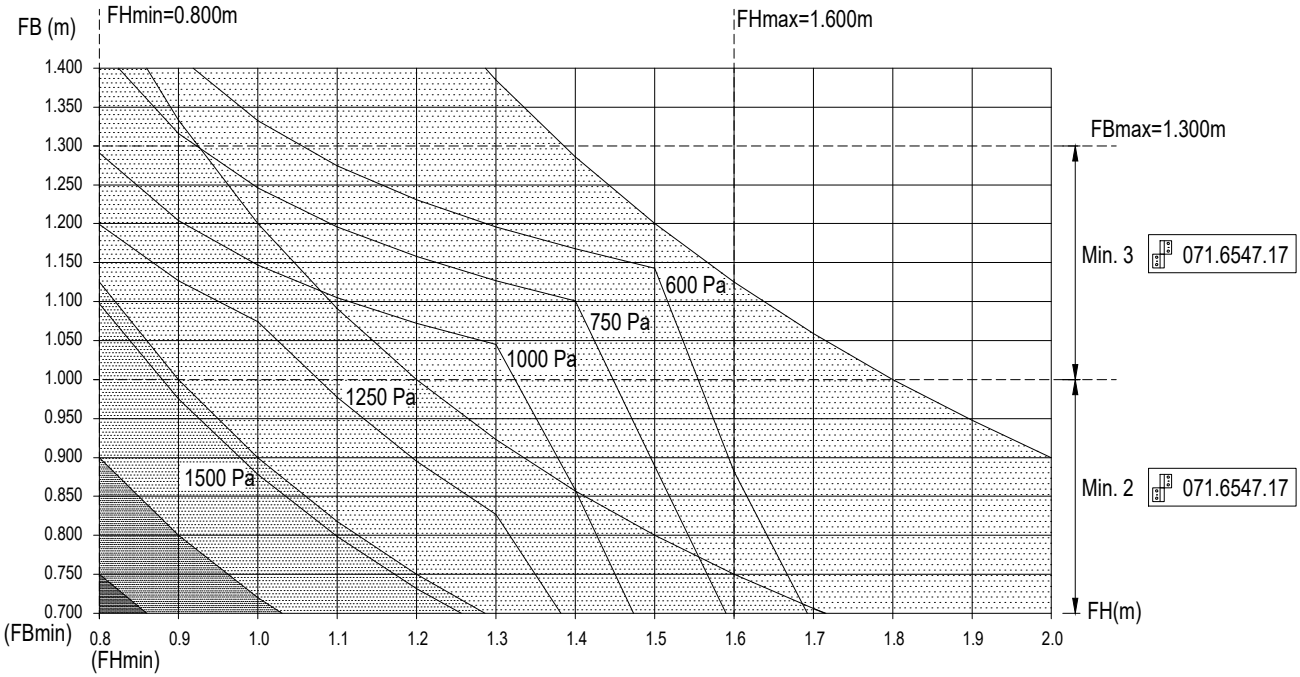

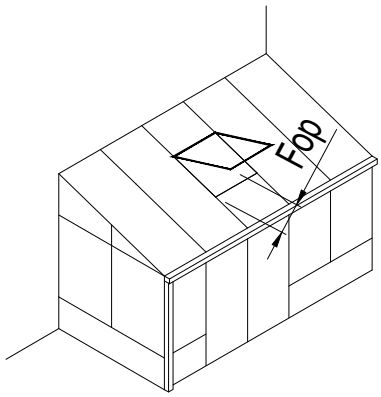

Hoogtebeperking bij de spindel
Restriction de l'hauteur pour la vis sans fin
Restriction of the height at the spindle
Höhebeschränkung bei der Spindel

FH=720mm	Fop(max)=300mm
FH=700mm	Fop(max)=290mm
FH=650mm	Fop(max)=265mm
FH=600mm	Fop(max)=240mm
FH=550mm	Fop(max)=215mm

D0004384

E

VOORBEELD MAX. TOELAATBARE LENGTEN DAKRAMEN
EXEMPLE LONGUEURS MAX. ADMISSIBLE TABATIERES
EXAMPLE MAX. ADMISSIBLE LENGTHS ATTIC WINDOWS
BEISPIEL MAX. ZULAESSIGE LAENGEN DACHFENSTER

Spindel 071.8445.17
Vis sans fin 071.8445.17
Spindle 071.8445.17
Spindel 071.8445.17

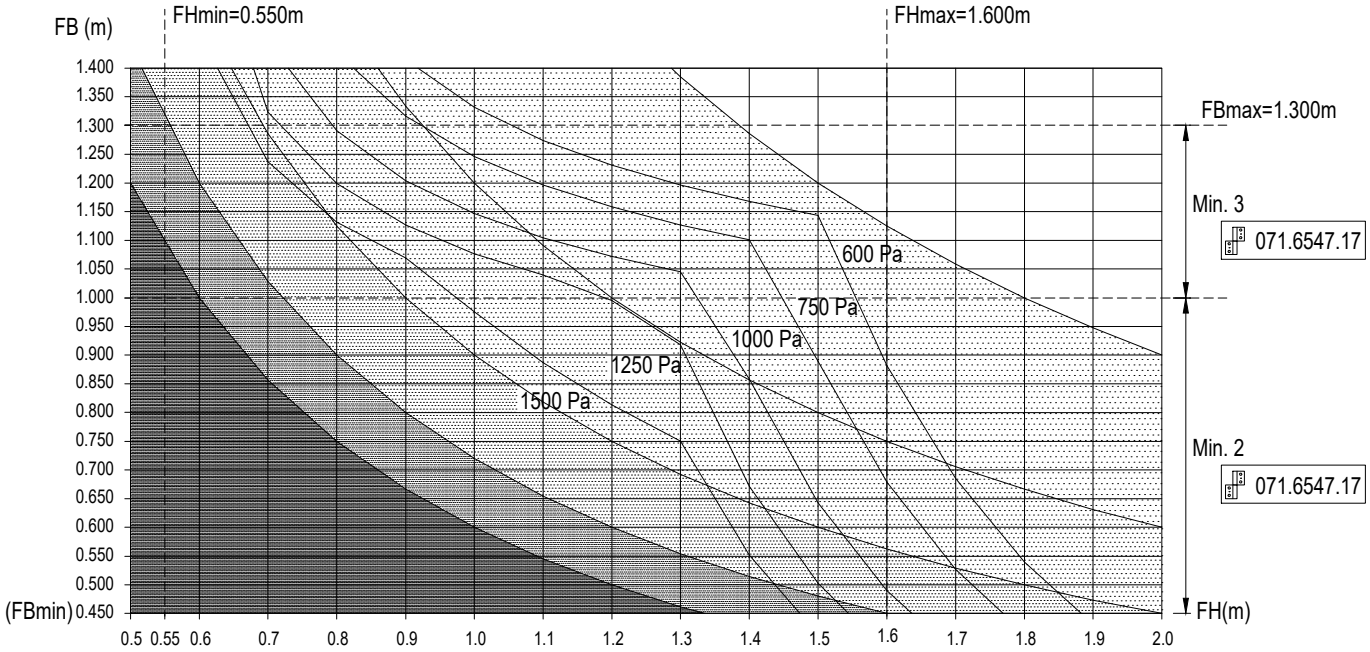

50 Kg/m²	600 Pa
75 Kg/m²	750 Pa
100 Kg/m²	1000 Pa
125 Kg/m²	1250 Pa
150 Kg/m²	1500 Pa
(eigengewicht + sneeuw) (propre poids et neige) (self-weight and snow) (Eigengewicht und Schnee)	(maximale onderdruk) (souspression maximale) (maximim underpressure) (Maximalunterdruck)

E

D0004384

Rekenvoorbeeld drager
Exemple de calculation chevron
Calculation example rafter
Rechenbeispiel dachrinne

$$L = 3m$$

$$A = 1m \qquad \Rightarrow \qquad \frac{L}{300} = 0.01m \qquad \Rightarrow f_{max} = 0.008m$$

$$f_{max} = \frac{L}{300}, \max .8mm$$

$$\Downarrow$$ ☞ 43.e..

$$I = \pm 190cm^4, p = 1000\,Pa \qquad \Rightarrow \qquad p = 600\,Pa \rightarrow I = \frac{600}{1000} \times 190 \rightarrow I = 114cm^4$$

$$f = \frac{5}{384} \times \frac{p \times A \times L^4}{E \times I} \qquad \Rightarrow \qquad I = \frac{5}{384} \times \frac{p \times A \times L^4}{E \times f}$$

$$p = 1000\,Pa \qquad \Rightarrow \qquad I = \frac{5}{384} \times \frac{1000 \times 1 \times 3^4}{70 \times 10^9 \times 0.008} = 188.4cm^4$$

$$p = 600\,Pa \qquad \Rightarrow \qquad I = \frac{5}{384} \times \frac{600 \times 1 \times 3^4}{70 \times 10^9 \times 0.008} = 113.0cm^4 = 188.4 \times 0.6$$

Rekenvoorbeeld goot
Exemple de calculation gouttiere
Calculation example gutter
Rechenbeispiel rinnenprofil

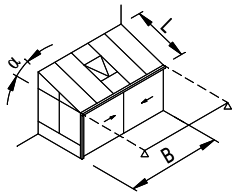

$$\Rightarrow \qquad f_{max} = \frac{5}{384} \times \frac{p \times L/2 \times B^4}{E \times I}$$

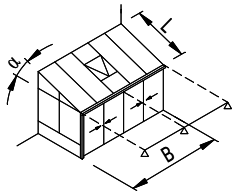

$$\Rightarrow \qquad f_{max} = \frac{1}{192} \times \frac{p \times L/2 \times (B/2)^4}{E \times I}$$

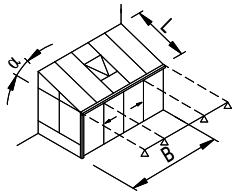

$$\Rightarrow \qquad f_{max} = 0.0677083 \times \frac{p \times L/2 \times (B/4)^4}{E \times I}$$

E

D0004385

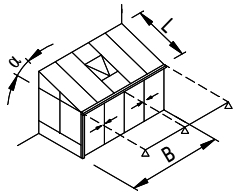

$L = 3m$

$B = 6m$

$f_{max} = \max .4mm$

$\Downarrow$ ☞ 43.e.

$$I = \pm 230 cm^4, p = 1000 Pa \quad \Rightarrow \quad p = 600 Pa \rightarrow I = \frac{600}{1000} \times 230 \rightarrow I = 138 cm^4$$

$$f_{max} = \frac{1}{6144} \times \frac{p \times L \times B^4}{E \times I} \quad \Rightarrow \quad I = \frac{1}{6144} \times \frac{p \times L \times B^4}{E \times f_{max}}$$

$$p = 1000 Pa \quad \Rightarrow \quad I = \frac{1}{6144} \times \frac{1000 \times 3 \times 6^4}{70 \times 10^9 \times 0.004} = 226.0 cm^4$$

$$p = 600 Pa \quad \Rightarrow \quad I = \frac{1}{6144} \times \frac{600 \times 3 \times 4^4}{70 \times 10^9 \times 0.004} = 135.6 cm^4 = 226.0 \times 0.6$$

E

D0004385

MAX. TOELAATBARE BELASTING
CHARGE MAX. ADMISSIBLE
MAX. ADMISSIBLE LOAD
MAX. ZULAESSIGE BELASTUNG

D0069811

071.7205.00

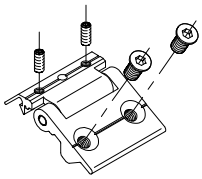

071.7211.00

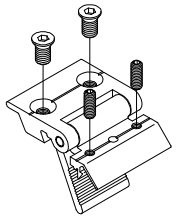

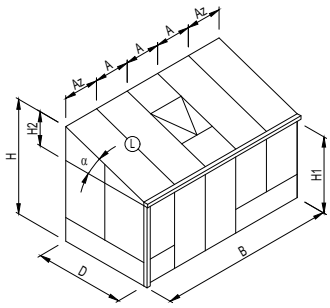

Fmax / rafter = 10180N (safety factor included) (071.7205.00/ 071.7211.00)

Pg= glass weight (N/m²)

μi= shape factor for snow load
Typically Ni=0.8 in case of uniformly distributed snow

Ps= snow load (N/m²)
Pw= wind load (N/m²) (including shape factors)

Example of calculation

*Glass + snow (glass weight + snow load according to Eurocodes)
F=(1.35 x Pg + 1.5 x μi x Ps) x A x L + Y x L $\leq$ 10180N (071.7205.00/ 071.7211.00)

*Glass + wind (loads according to Eurocodes)
F=(1.35 x Pg + 1.5 x Pw) x A x L + Y x L $\leq$ 10180N (071.7205.00/ 071.7211.00)

007.0797.XX		Y = 21
007.0797.XX	St/fer 90x50x3.2	Y = 113
007.0798.XX		Y = 33
007.0798.XX	St/fer 100x40x3	Y = 121
007.0798.XX	St/fer 100x40x5	Y = 175
007.0798.XX	St/fer 100x15 2 x 007.0818.00	Y = 210
007.0799.XX		Y = 58
007.0799.XX	St/fer 120x40x5 2 x 007.0818.00	Y = 234
007.0800.XX		Y = 23
007.0800.XX	0S0.8015.-- 2 x 007.0818.00	Y = 166
007.0800.XX	St/fer 70x40x3 2 x 007.0818.00	Y = 102
007.0800.XX	St/fer 70x40x4 2 x 007.0818.00	Y = 122

007.0800.XX	0S7.0503.--	Y = 95
007.0802.XX		Y = 18
007.0802.XX	St/fer 60x40x2	Y = 59
007.0802.XX	St/fer 60x40x3	Y = 77
007.0802.XX	St/fer 60x40x4	Y = 95
007.0803.XX		Y = 31
007.0803.XX	0S0.8015.-- 1 x 007.0818.00	Y = 167
007.0803.XX	0S8.0403.--	Y = 103
007.0813.XX		Y = 46
007.0813.XX	0S0.8015.-- 1 x 007.0818.00	Y = 183
007.0813.XX	0S8.0405.--	Y = 158

E

D0069811

D0069812

BEGLAZINGSMOGELIJKHEDEN
POSSIBILITES DE VITRAGE
GLAZING POSSIBILITIES
VERGLASUNGSMOEGLICHKEITEN

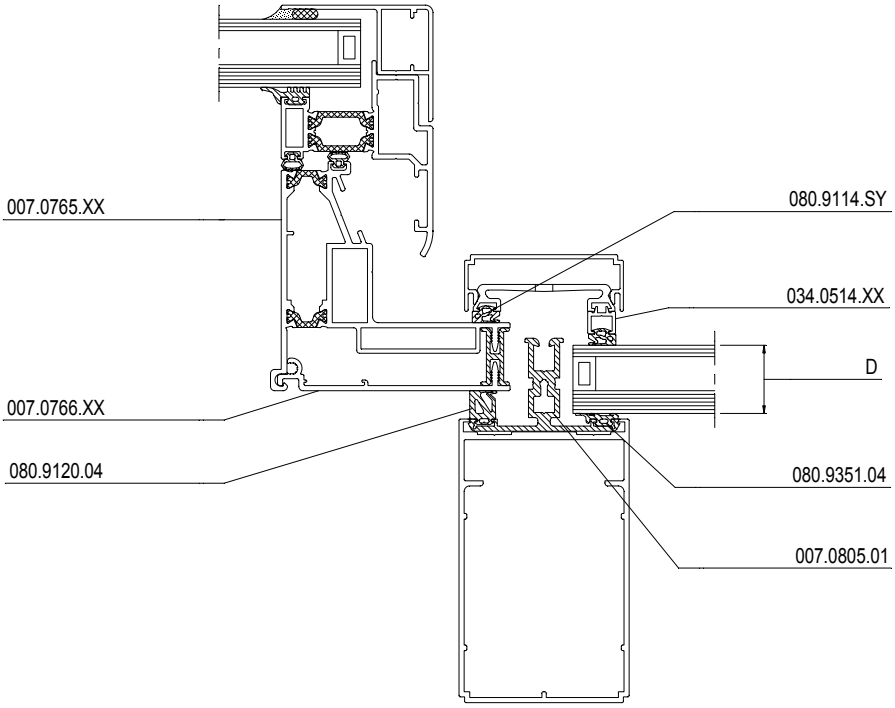

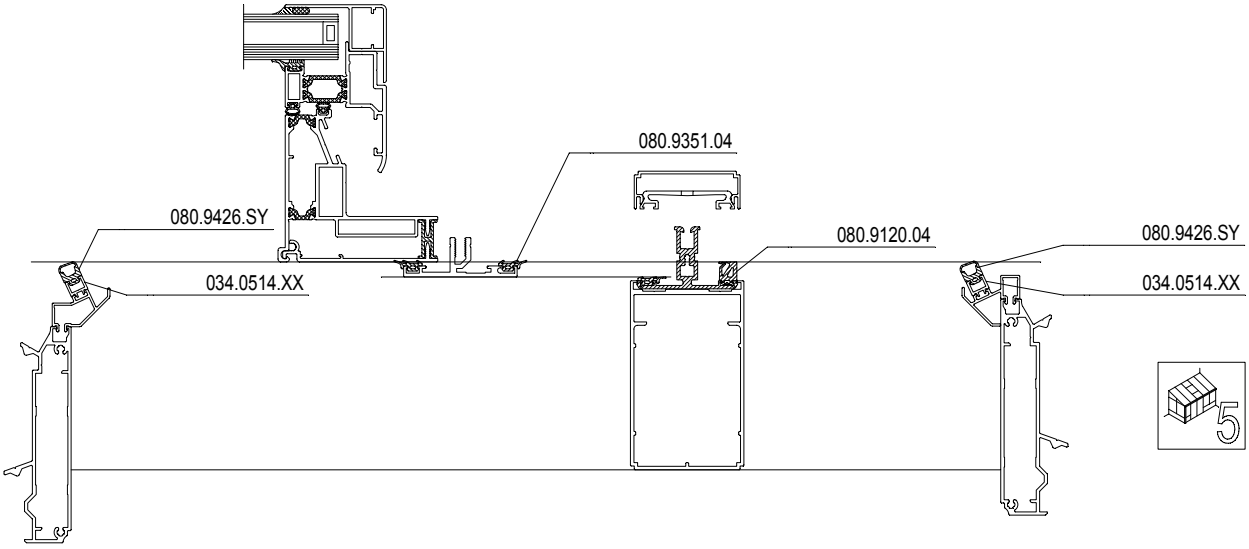

E

D0069812

BEGLAZINGSMOGELIJKHEDEN
POSSIBILITES DE VITRAGE
GLAZING POSSIBILITIES
VERGLASUNGSMOEGLICHKEITEN

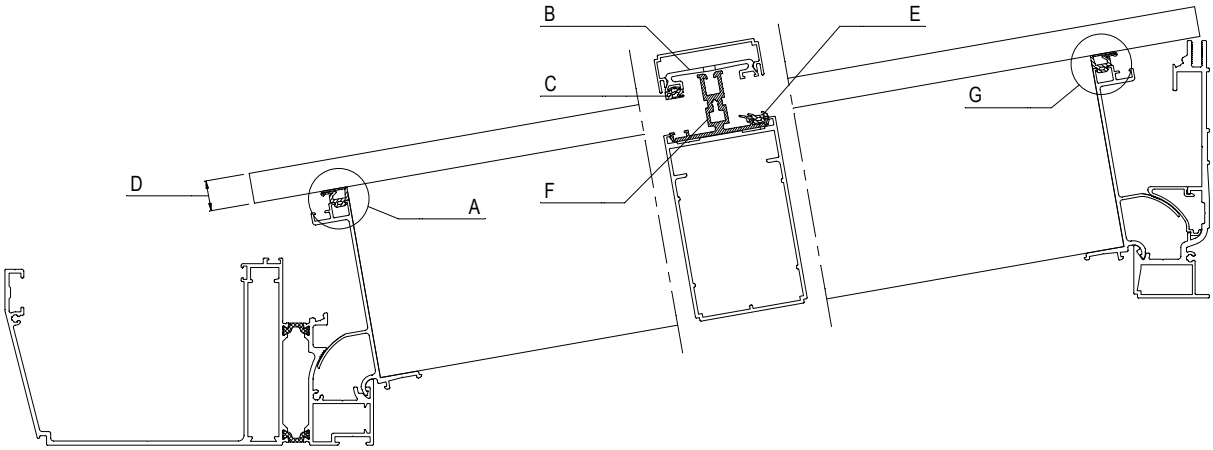

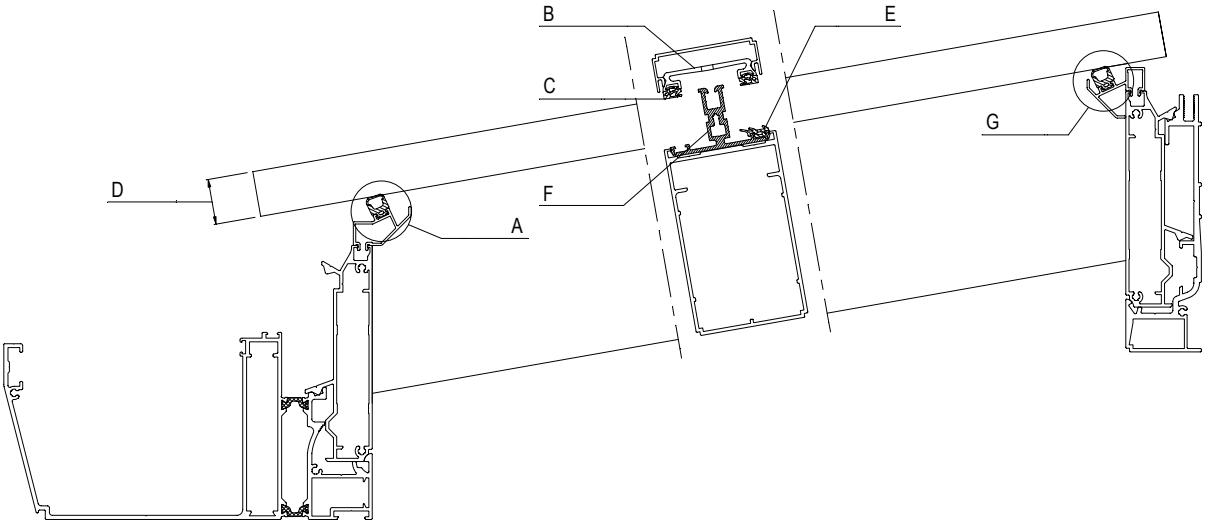

E

D0069813

A		G
080.9426.SY + 034.0514.XX	B 034.1060.XX + C 080.9114.SY D 8mm E 080.9120.04 + F 007.0805.01	080.9426.SY + 034.0514.XX
	B 034.1060.XX + C 080.9114.SY D 10mm E 080.9120.04 + F 007.0805.01	
	B 034.1060.XX + C 080.9114.SY D 12mm E 080.9120.04 + F 007.0805.01	
	B 034.1060.XX + C 080.9116.04 D 14mm E 080.9351.04 + F 007.0805.01 | 007.0804.01	
	B 034.1060.XX + C 080.9114.SY D 16mm E 080.9351.04 + F 007.0805.01 | 007.0804.01	

A		G
080.9426.SY	B 034.1060.XX + C 080.9114.SY D 16 --> 32mm E 080.9351.04 + F 007.0805.01 | 007.0804.01	080.9426.SY

E

D0069813

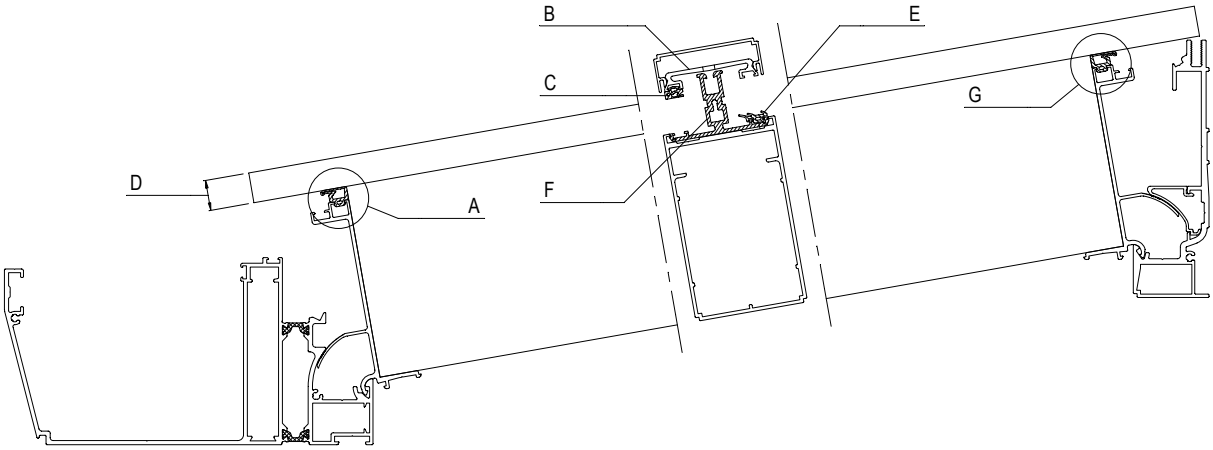

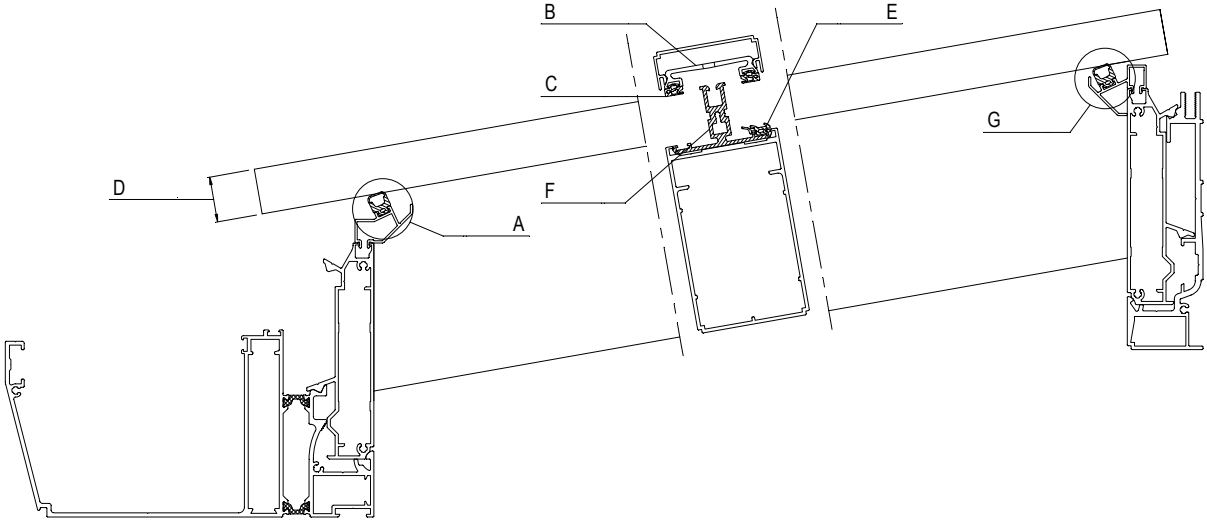

D0077744

A		G
 080.9426.SY + 034.0514.XX	B 034.1060.XX + C 080.9741.04 D 24mm E 080.9008.04 + F 007.0805.01	 080.9426.SY + 034.0514.XX
	B 034.1060.XX + C 080.9740.SY D 26 --> 30mm E 080.9008.04 + F 007.0805.01	
	B 034.1060.XX + C 080.9742.04 D 32mm E 080.9008.04 + F 007.0805.01	

E

D007744

F

Reynaers Aluminium

Montagetekeningen
Fabrication et montage
Assembly drawings
Montagezeichnungen

GOOTAANSLUITING
RACCORDEMENT GOUTTIERE
GUTTER CONNECTION
RINNENANSCHLUSS

TREKSTANG NIET DOOR REYNAERS - STABILITEIT TE CONTROLEREN DOOR DE AANNEMER
TIE ROD NOT BY REYNAERS - STRUCTURAL STABILITY TO BE CHECKED BY CONTRACTOR
ZUGSTANGE NICHT BEI REYNAERS - STRUKTURäLE STäRKE ZU KONTROLIEREN BY DEN AUFTRAGNEHMER
TIRANT PAS PAR REYNAERS - STABILITÉ STRUCTURELLE À VÉRIFIER PAR L'ENTREPRENEUR

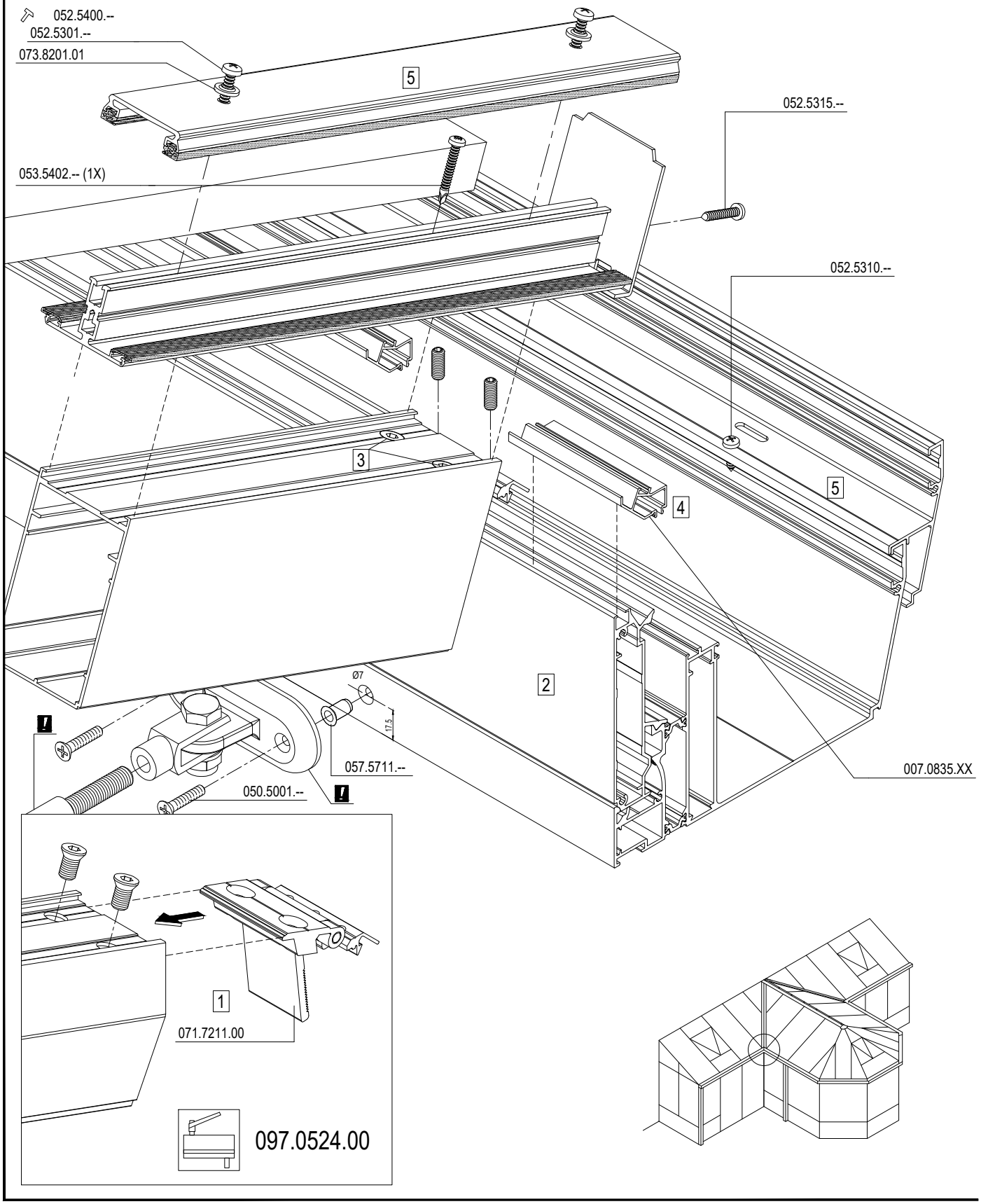

D0069866

F

MUURAANSLUITING
RACCORD MURAL
WALL SECTION
MAUERANSCHLUSS

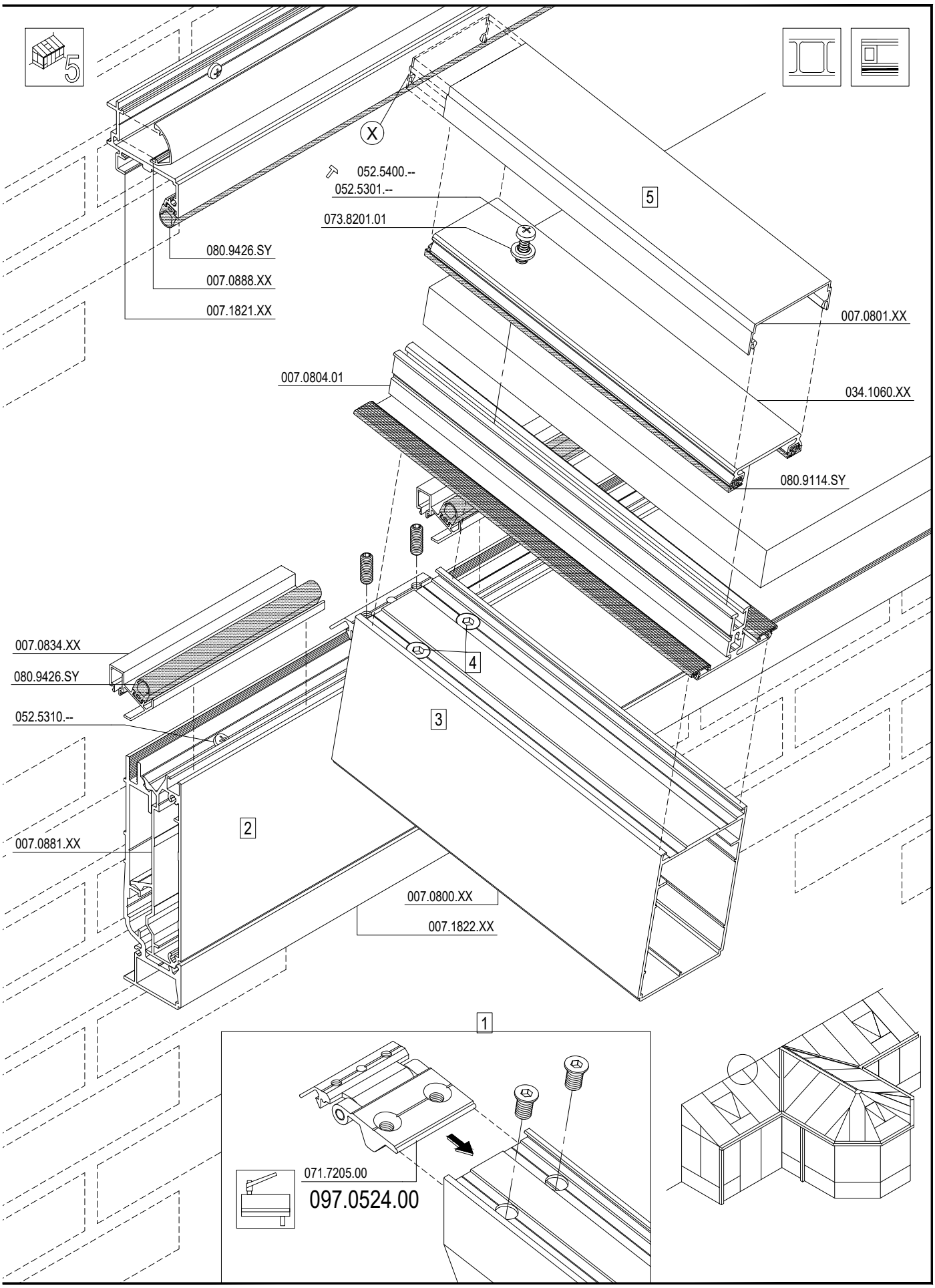

F

GOOTVERBINDING
RACCORDEMENT GOUTTIERE
GUTTER CONNECTION
RINNENVERBINDUNG

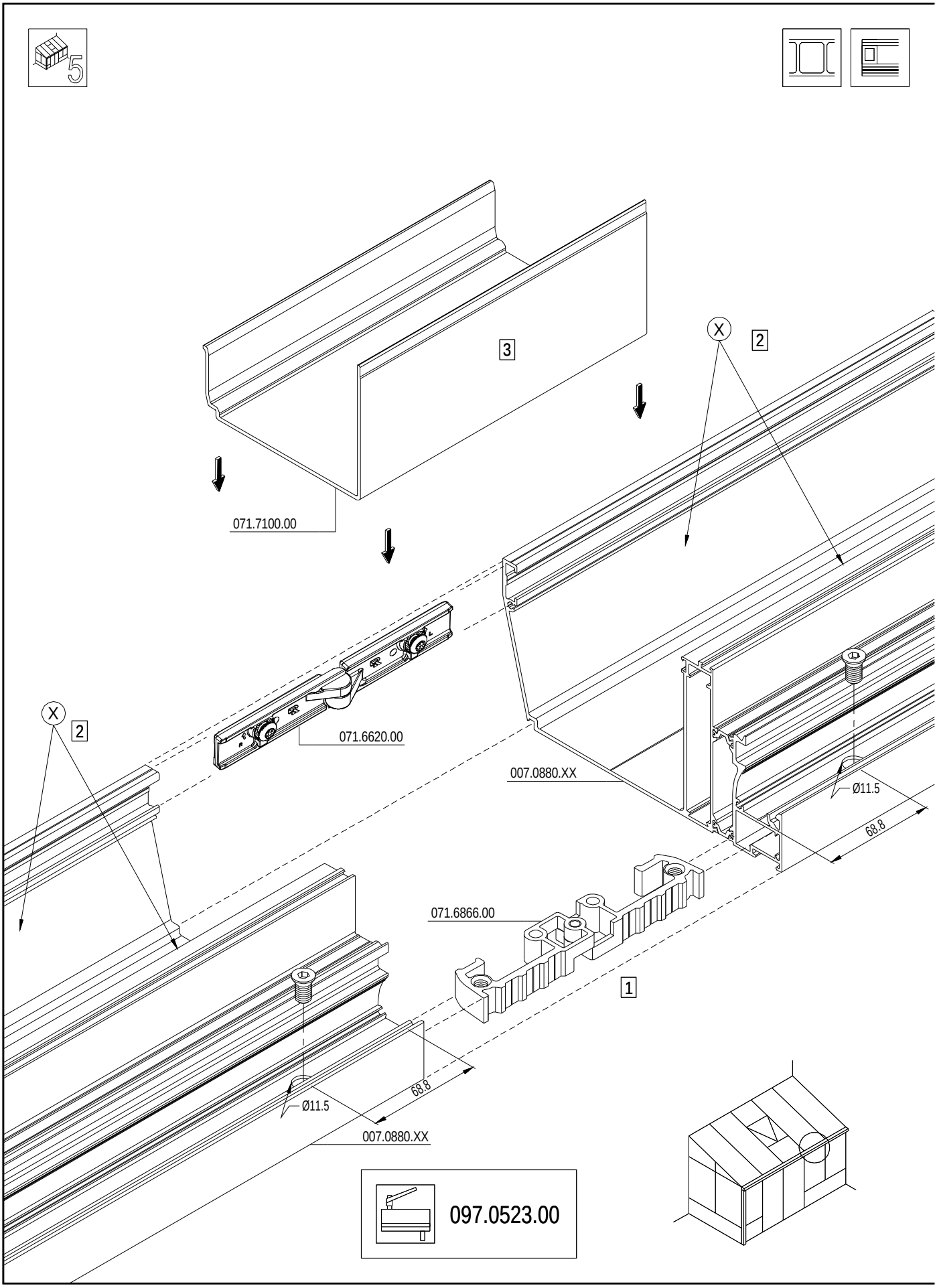

GOOTVERBINDING
RACCORDEMENT GOUTTIERE
GUTTER CONNECTION
RINNENVERBINDUNG

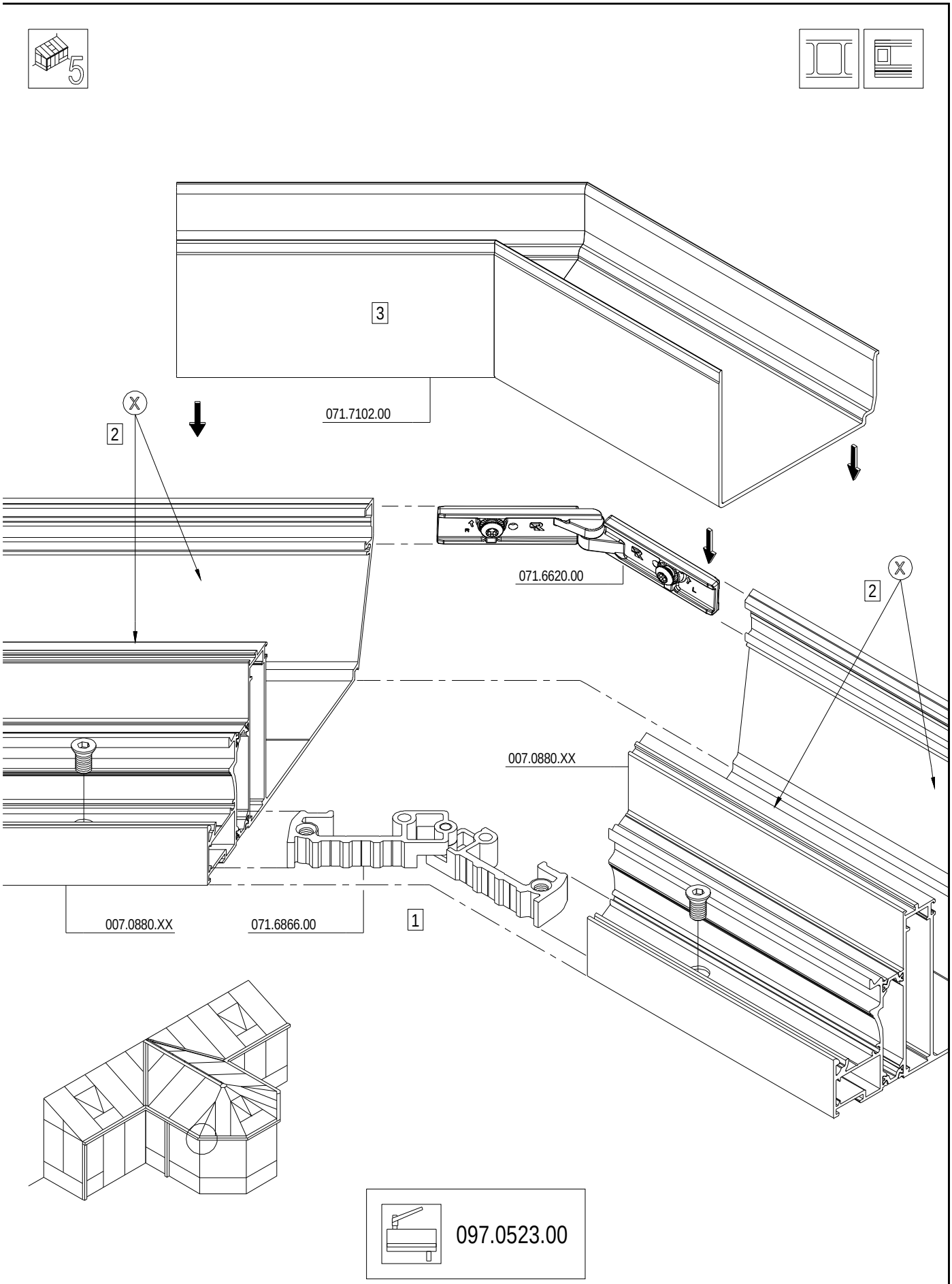

F

D0069865

GOOTVERBINDING
RACCORDEMENT GOUTTIERE
GUTTER CONNECTION
RINNENVERBINDUNG

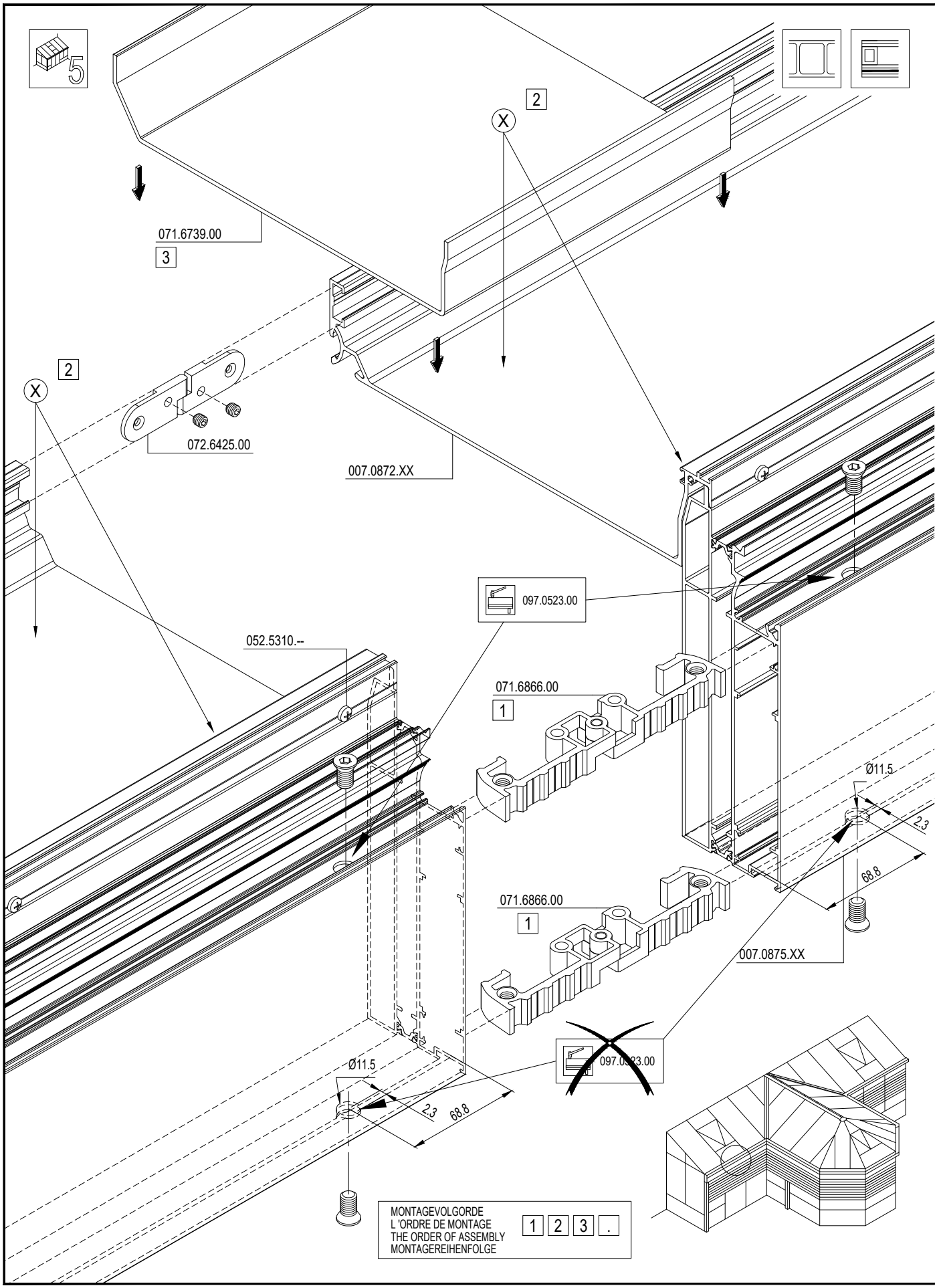

F

GOOTVERBINDING
RACCORDEMENT GOUTTIERE
GUTTER CONNECTION
RINNENVERBINDUNG

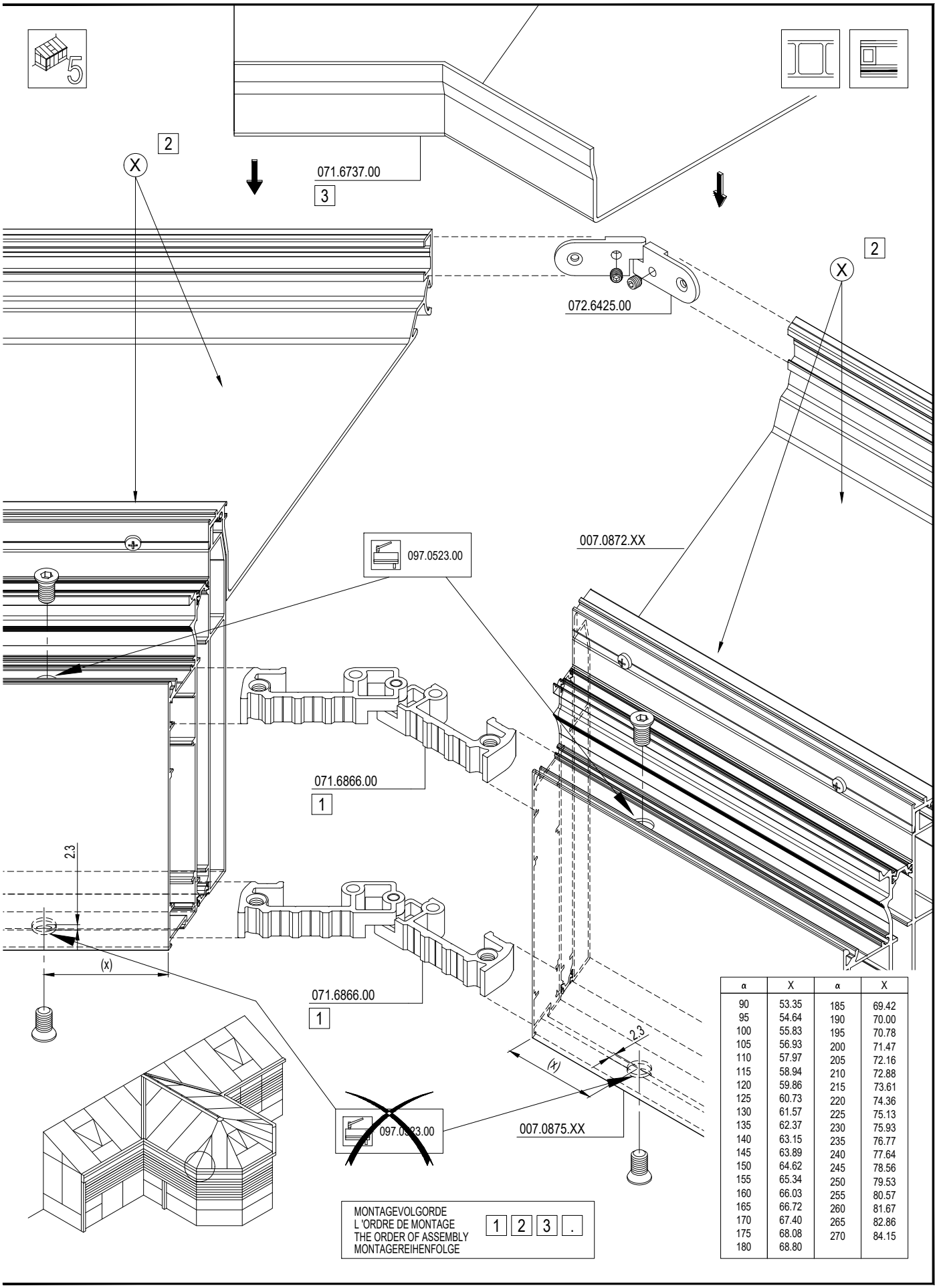

α	X	α	X
90	53.35	185	69.42
95	54.64	190	70.00
100	55.83	195	70.78
105	56.93	200	71.47
110	57.97	205	72.16
115	58.94	210	72.88
120	59.86	215	73.61
125	60.73	220	74.36
130	61.57	225	75.13
135	62.37	230	75.93
140	63.15	235	76.77
145	63.89	240	77.64
150	64.62	245	78.56
155	65.34	250	79.53
160	66.03	255	80.57
165	66.72	260	81.67
170	67.40	265	82.86
175	68.08	270	84.15
180	68.80		

F

OVERZICHT GOOTVERBINDING
APERCU RACCORDEMENT GOUTTIERE
OVERVIEW GUTTER CONNECTION
UEBERSICHT RINNENVERBINDUNG

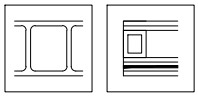

097.0523.00	90° → 270°	90° → 180°	180° → 270°
0I7.0880.XX 007.0878.XX 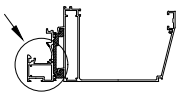 OF-OU-OR-ODER	071.6866.00 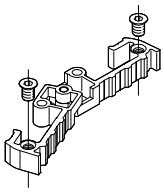	007.0878.XX 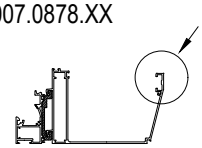 OF-OU-OR-ODER	071.6620.00 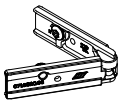	072.6425.00 
0I7.0880.XX 007.0880.XX 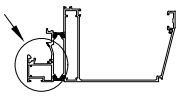 OF-OU-OR-ODER		007.0880.XX 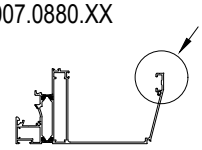 OF-OU-OR-ODER		
007.0876.XX 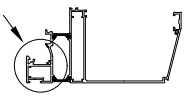		007.0876.XX 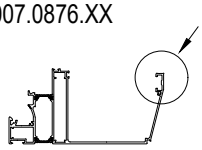 OF-OU-OR-ODER		
007.0862.XX 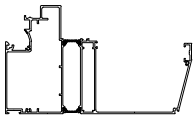	---	007.0862.XX 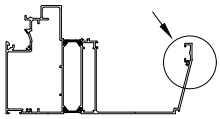 OF-OU-OR-ODER		
007.0875.XX 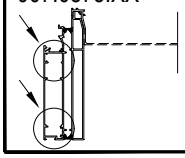	2x 071.6866.00 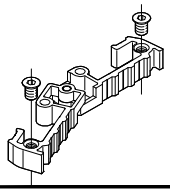	007.0872.XX 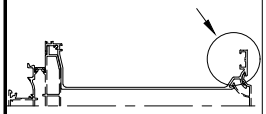		

F

D0069868

OVERZICHT GOOTVERBINDING
APERCU RACCORDEMENT GOUTTIERE
OVERVIEW GUTTER CONNECTION
UEBERSICHT RINNENVERBINDUNG

	90°	135°	150°	165°	180°	270°
007.0878.XX OF-OU-OR-ODER 007.0880.XX OF-OU-OR-ODER 007.0876.XX OF-OU-OR-ODER 007.0862.XX	071.7101.00	071.7102.00	071.7103.00	071.7104.00	071.7100.00	071.7105.00
007.0872.XX	071.6735.00	071.6737.00	---	---	071.6739.00	---

F

D0069868

VERHOGINGEN GOOT
PROFILE REHAUSSE DE GOUTTIERE
RAISING PROFILES GUTTER SECTION
RINNENVERBREITERUNGEN

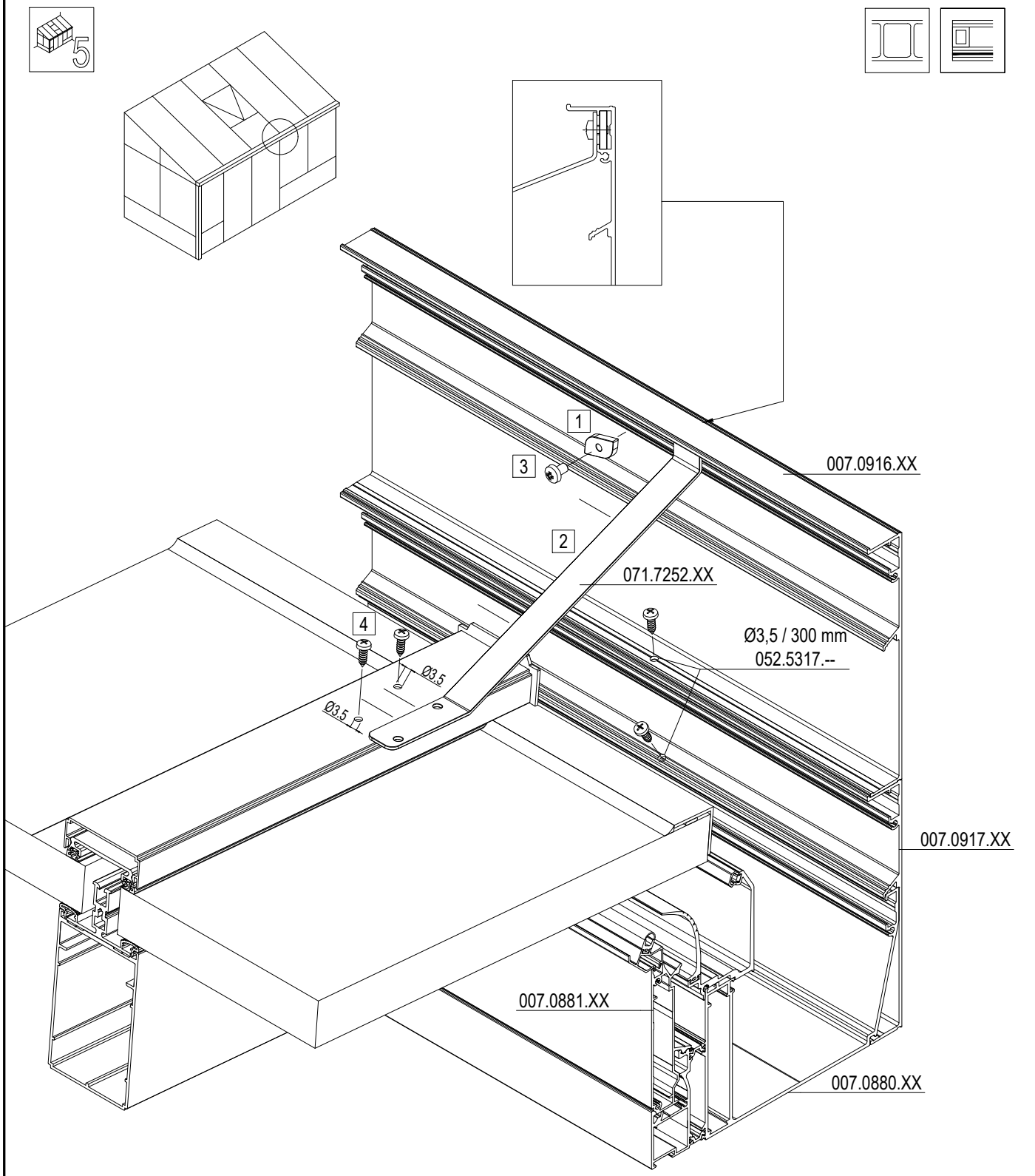

MONTAGEVOLGORDE
L 'ORDRE DE MONTAGE
THE ORDER OF ASSEMBLY
MONTAGEREIHENFOLGE

1 2 3 .

D2001637

F

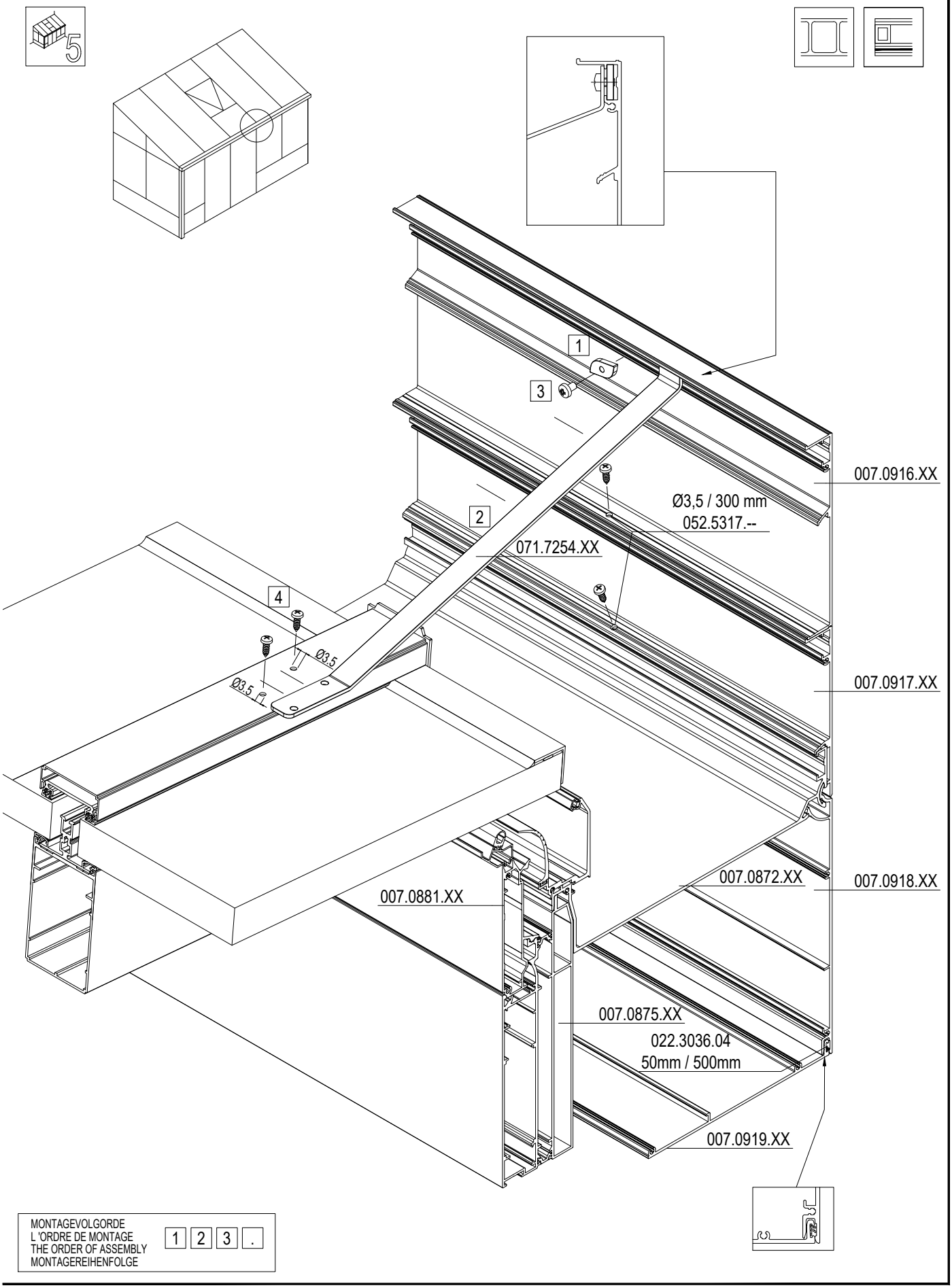
5
1
3
2
4
007.0916.XX
Ø3,5 / 300 mm
052.5317.--
071.7254.XX
Ø3,5
Ø3,5
007.0917.XX
007.0872.XX
007.0918.XX
007.0881.XX
007.0875.XX
022.3036.04
50mm / 500mm
007.0919.XX
MONTAGEVOLGORDE
L 'ORDRE DE MONTAGE
THE ORDER OF ASSEMBLY
MONTAGEREIHENFOLGE
1 2 3 .
D2001637

F

VERHOGINGEN GOOT AFDEKKAPPEN VOOR ROLLUIK 90°
PROFILE REHAUSSE DE GOUTTIERE CAPUCHONS POUR VOLET ROULANT 90°
RAISING PROFILES GUTTER SECTION COVERS FOR ROLLER SHUTTER 90°
RINNENVERBREITERUNGEN ABDECKKAPPEN FUER ROLLADEN 90°

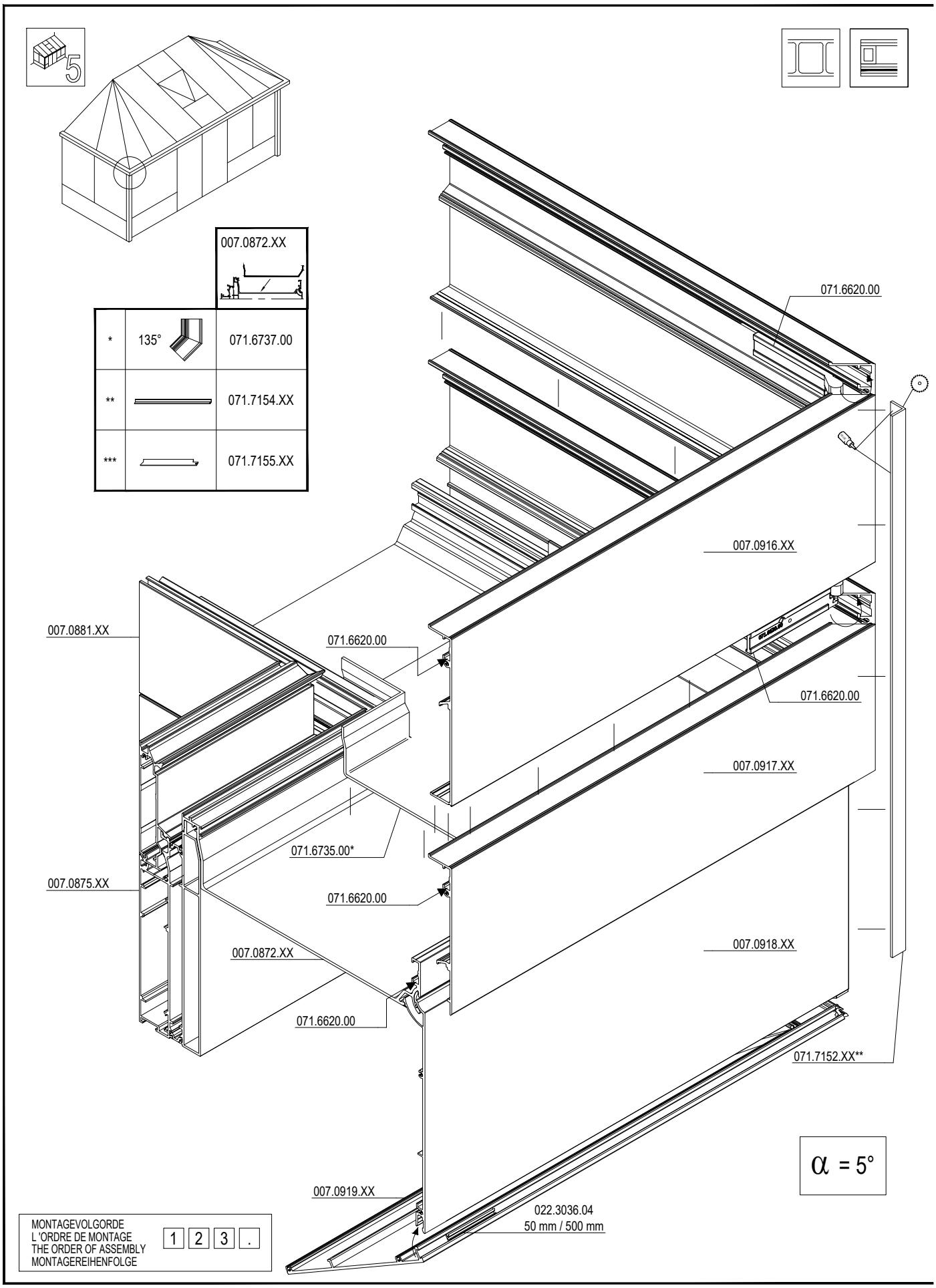

F

VERHOGINGEN GOOT AFDEKKAPPEN VOOR ROLLUIK 90°
PROFILE REHAUSSE DE GOUTTIERE CAPUCHONS POUR VOLET ROULANT 90°
RAISING PROFILES GUTTER SECTION COVERS FOR ROLLER SHUTTER 90°
RINNENVERBREITERUNGEN ABDECKKAPPEN FUER ROLLADEN 90°

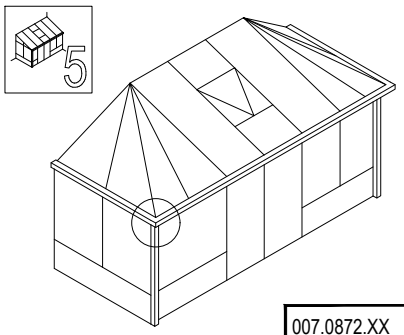

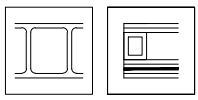

		007.0872.XX
*	135°	071.6737.00
**		071.7154.XX
***		071.7155.XX

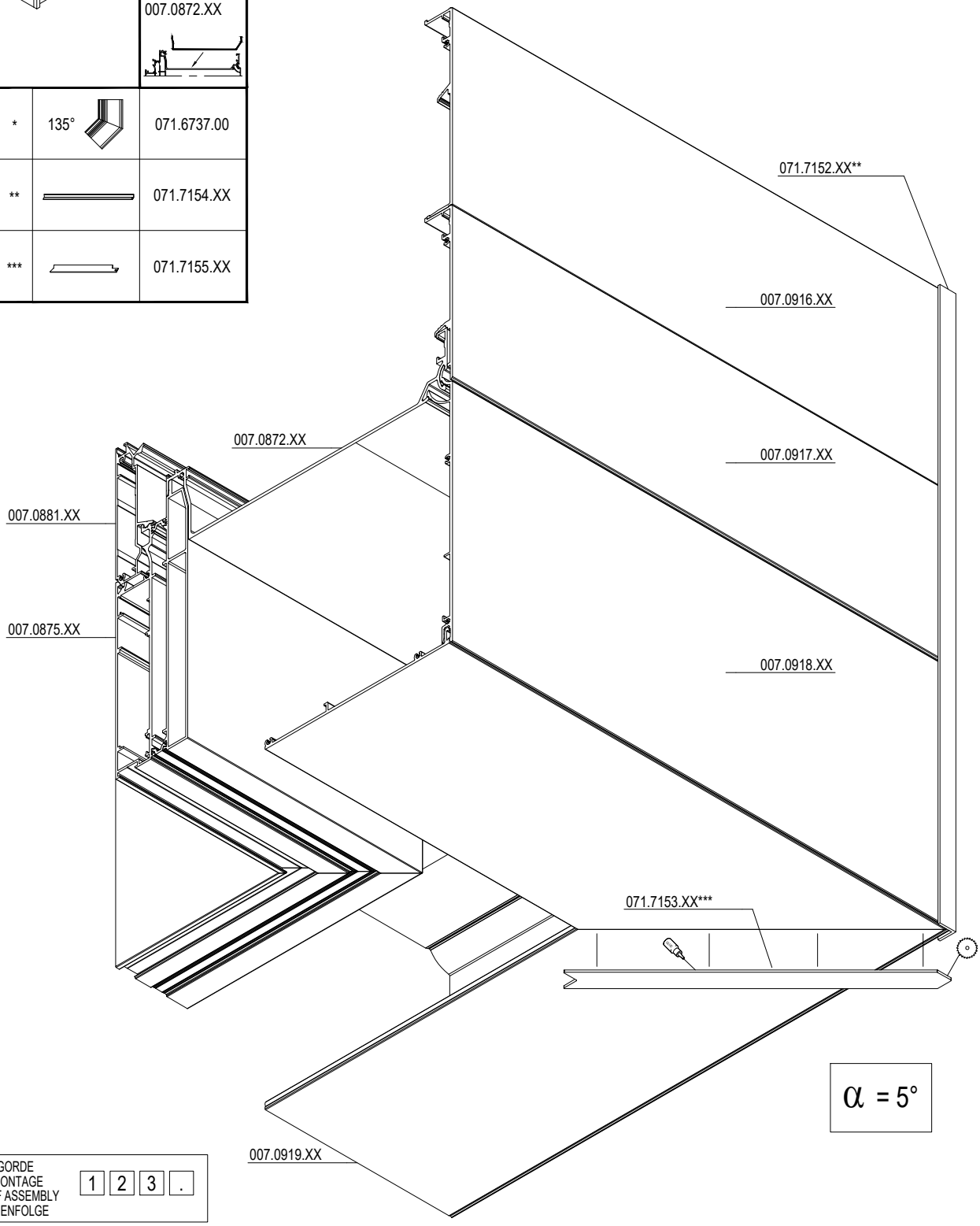

MONTAGEVOLGORDE
L 'ORDRE DE MONTAGE
THE ORDER OF ASSEMBLY
MONTAGEREIHENFOLGE

1 2 3 .

D2001638

F

VERHOGINGEN GOOT VERANDAHOEK
PROFILE REHAUSSE DE GOUTTIERE COIN DE VERANDA
RAISING PROFILES GUTTER SECTION VERANDA CORNER
RINNENVERBREITERUNGEN WINTERGARTENECKE

D2001662

VERHOGINGEN GOOT VERANDAHOEK
PROFILE REHAUSSE DE GOUTTIERE COIN DE VERANDA
RAISING PROFILES GUTTER SECTION VERANDA CORNER
RINNENVERBREITERUNGEN WINTERGARTENECKE

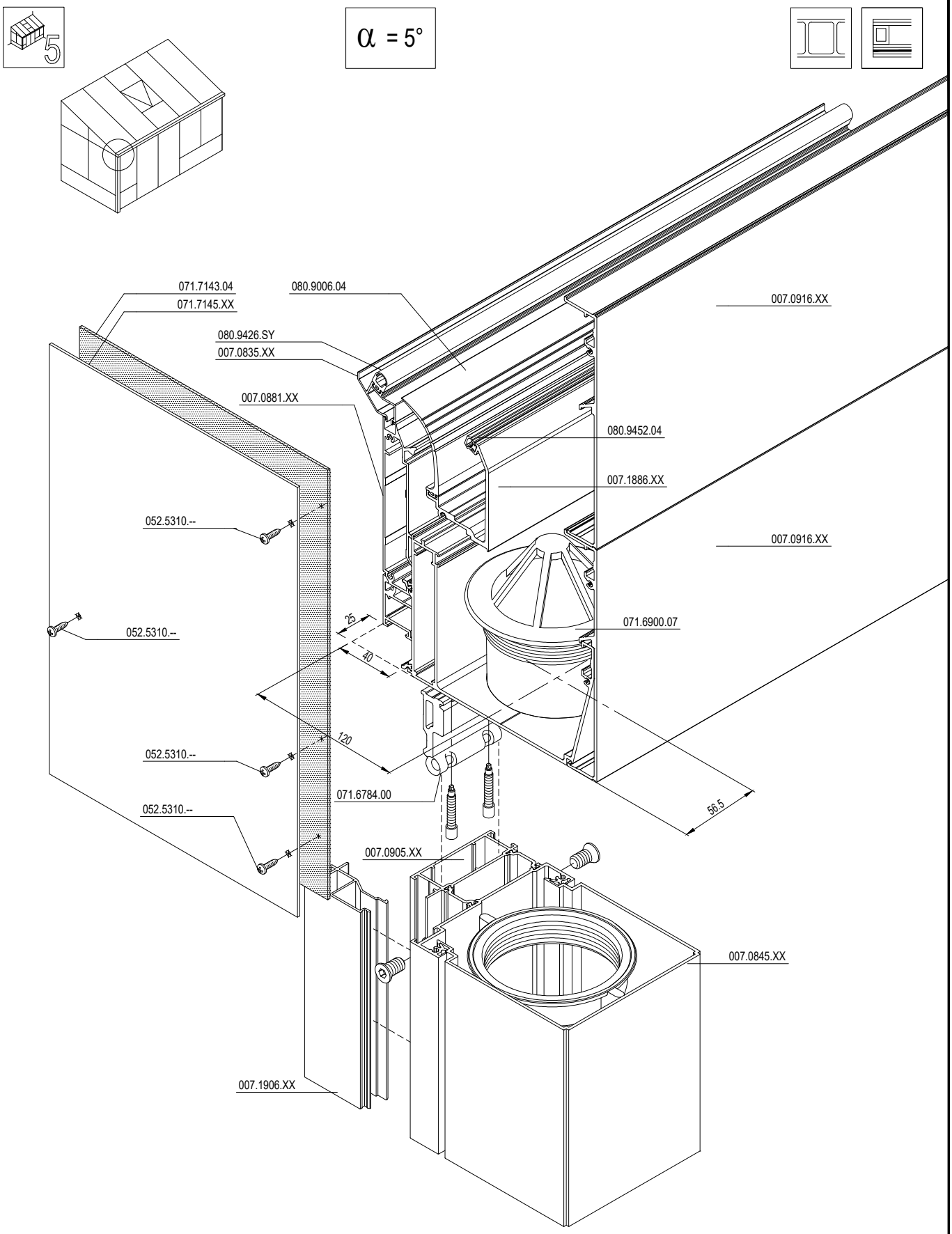

MONTAGEVOLGORDE
L 'ORDRE DE MONTAGE
THE ORDER OF ASSEMBLY
MONTAGEREIHENFOLGE

1 2 3 .

D2001662

F

VERHOGINGEN GOOT VOOR ROLLUIK VERANDAHOEK
PROFILE REHAUSSE DE GOUT.E POUR VOLET ROUL. COIN DE VERANDA
RAISING PROF. GUTTER SECT. FOR ROLLER SHUTTER VERANDA CORNER
RINNENVERBREITERUNGEN FUER ROLLADEN WINTERGARTENECKE

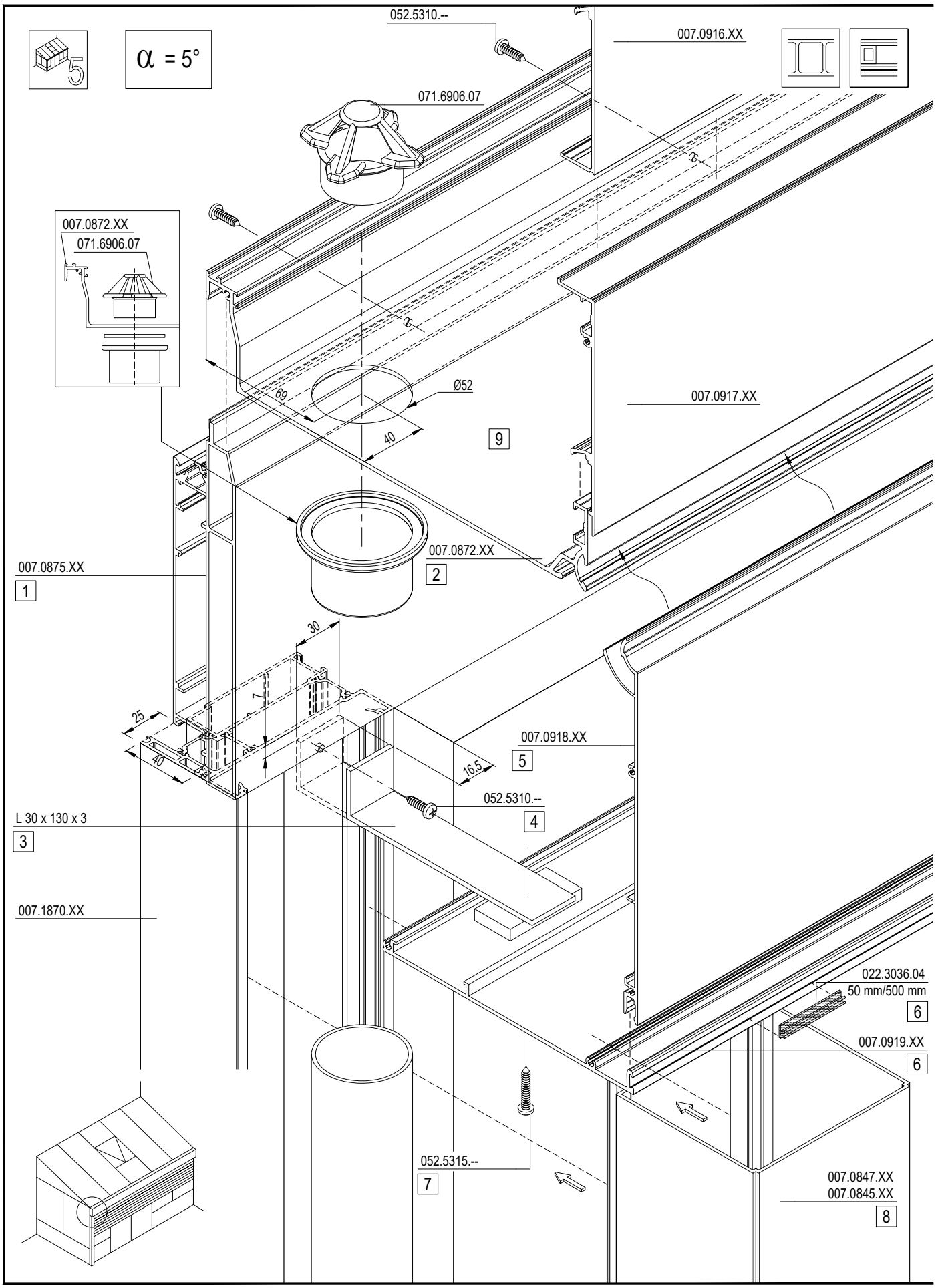

F

VERHOGINGEN GOOT VOOR ROLLUIK VERANDAHOEK
PROFILE REHAUSSE DE GOUT.E POUR VOLET ROUL. COIN DE VERANDA
RAISING PROF. GUTTER SECT. FOR ROLLER SHUTTER VERANDA CORNER
RINNENVERBREITERUNGEN FUER ROLLADEN WINTERGARTENECKE

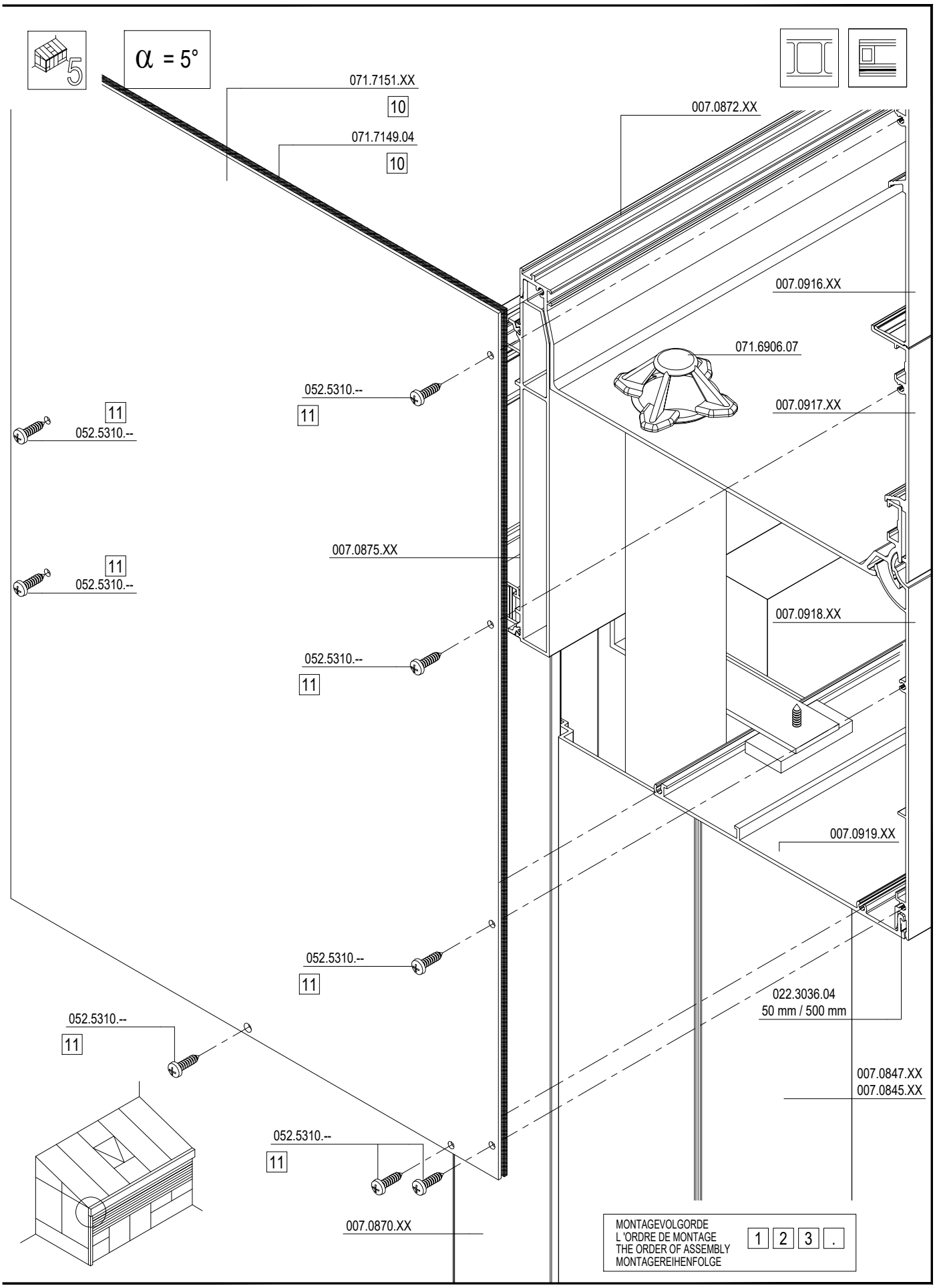

F

VERHOGINGEN GOOT VOOR ROLLUIK VERANDAHOEK
PROFILE REHAUSSE DE GOUT.E POUR VOLET ROUL. COIN DE VERANDA
RAISING PROF. GUTTER SECT. FOR ROLLER SHUTTER VERANDA CORNER
RINNENVERBREITERUNGEN FUER ROLLADEN WINTERGARTENECKE

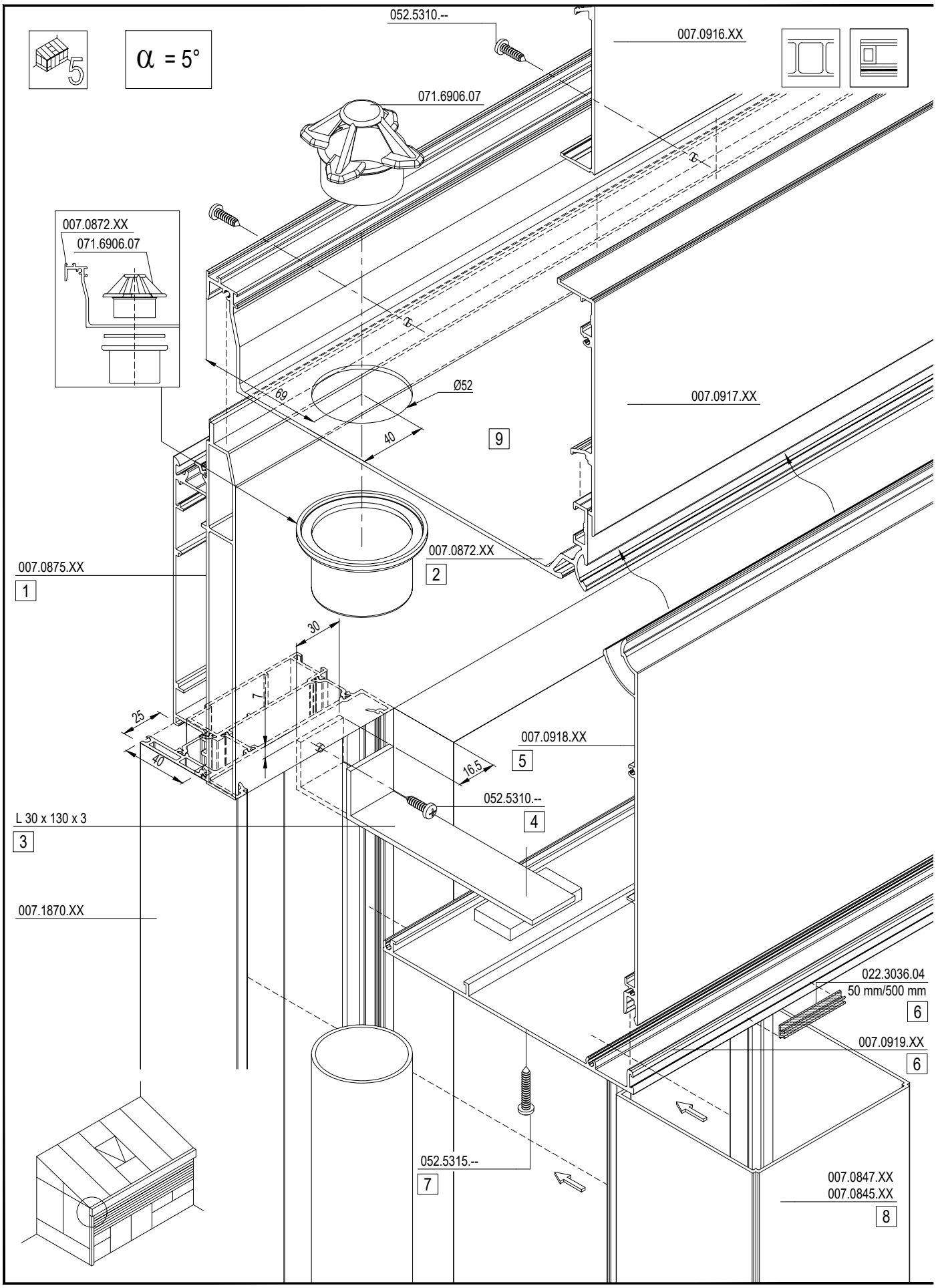

VERHOGINGEN GOOT VOOR ROLLUIK VERANDAHOEK
PROFILE REHAUSSE DE GOUT.E POUR VOLET ROUL. COIN DE VERANDA
RAISING PROF. GUTTER SECT. FOR ROLLER SHUTTER VERANDA CORNER
RINNENVERBREITERUNGEN FUER ROLLADEN WINTERGARTENECKE

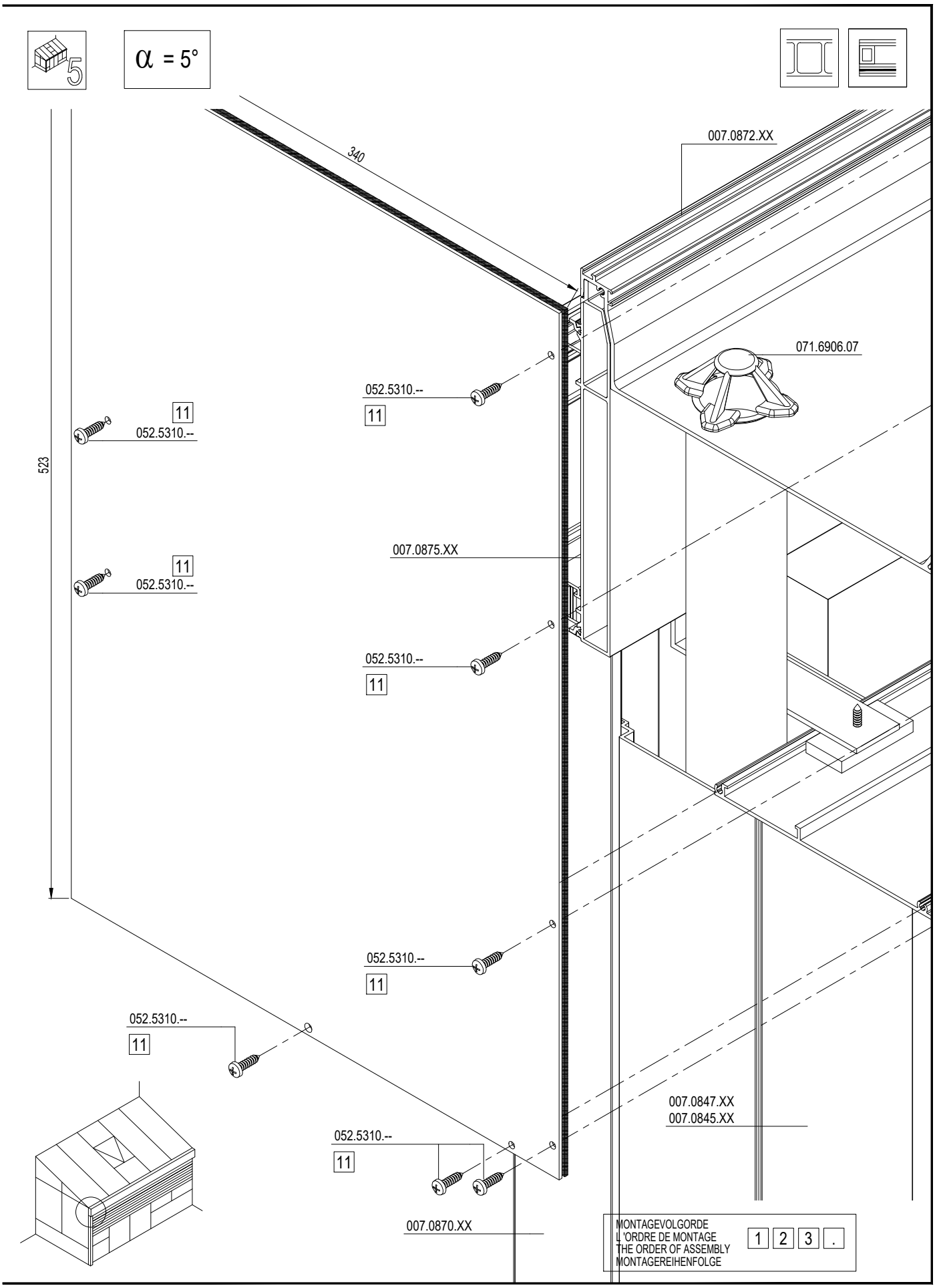

F

VERHOGINGEN GOOT VERANDAHOEK MUUR
PROFILE REHAUSSE DE GOUTTIERE COIN DE VERANDA MURAL
RAISING PROFILES GUTTER SECTION VERANDA CORNER WALL
RINNENVERBREITERUNGEN WINTERGARTENECKE MAUER

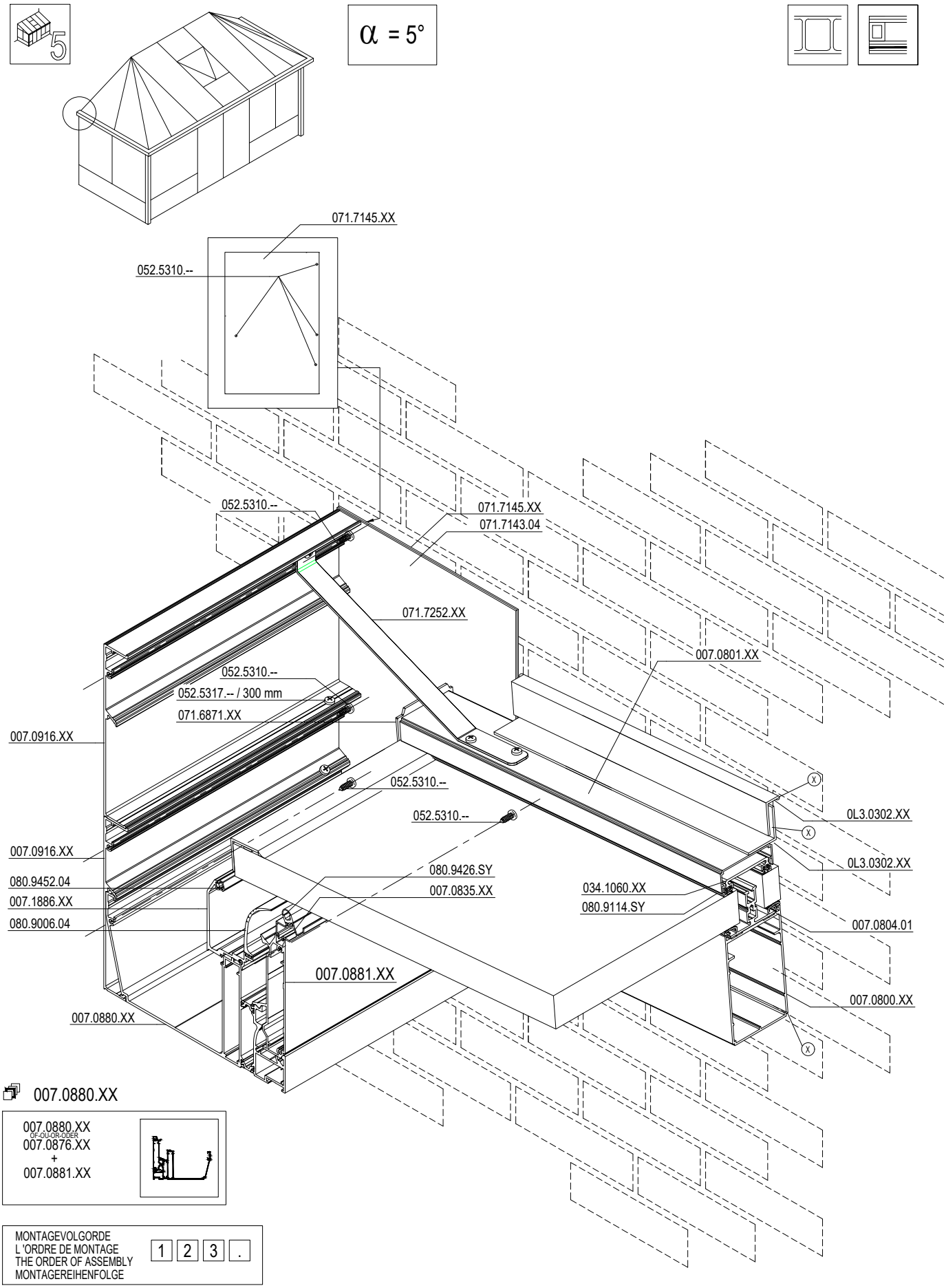

F

VERHOGINGEN GOOT VERANDAHOEK MUUR
PROFILE REHAUSSE DE GOUTTIERE COIN DE VERANDA MURAL
RAISING PROFILES GUTTER SECTION VERANDA CORNER WALL
RINNENVERBREITERUNGEN WINTERGARTENECKE MAUER

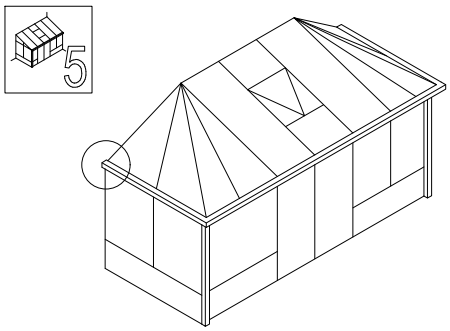

α = 5°

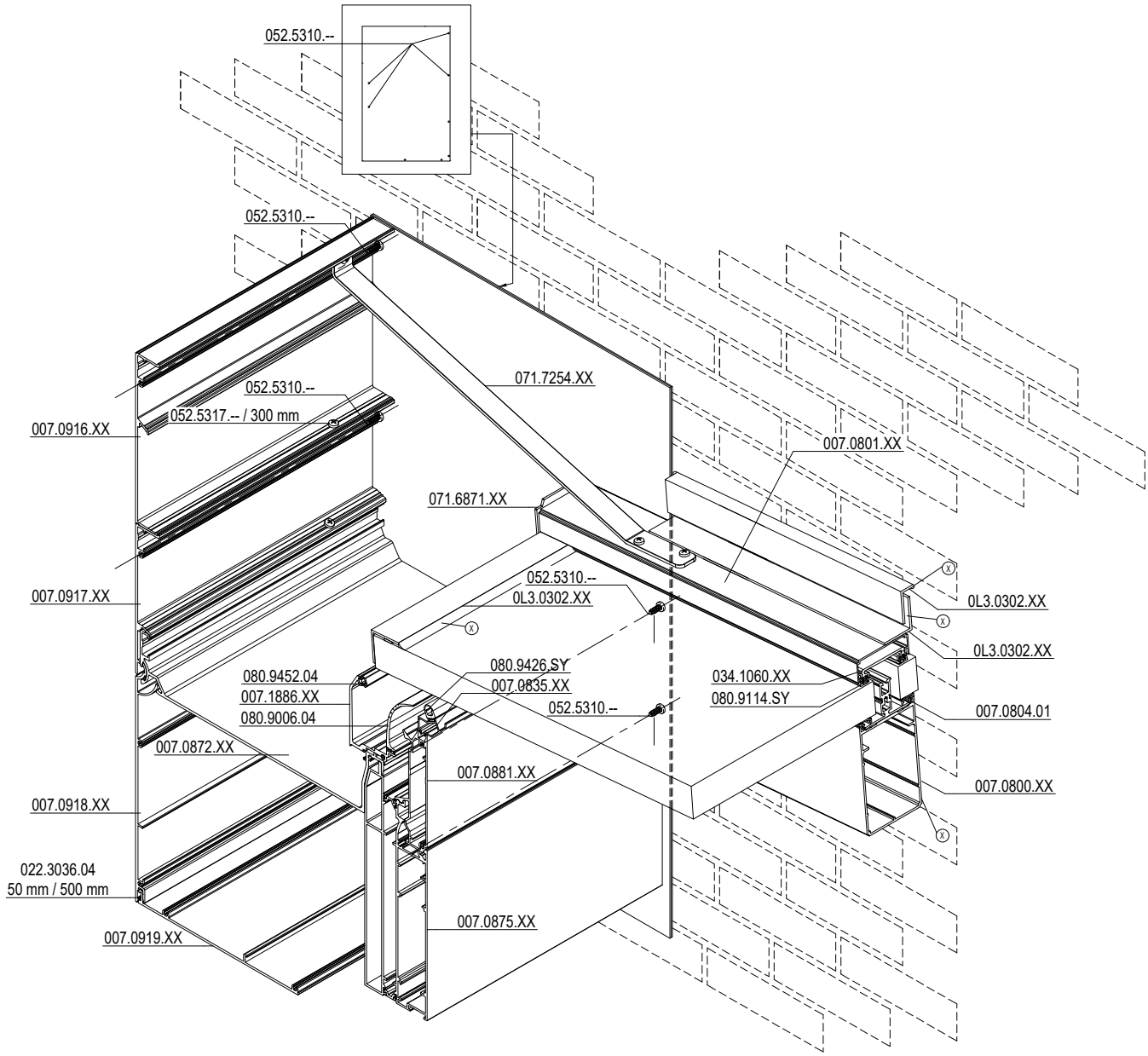

MONTAGEVOLGORDE
L 'ORDRE DE MONTAGE
THE ORDER OF ASSEMBLY
MONTAGEREIHENFOLGE

1	2	3	.

D2001663

F

F

D0070129

VERANDAHOEK
COIN DE VERANDA
VERANDA CORNER
WINTERGARTENECKE

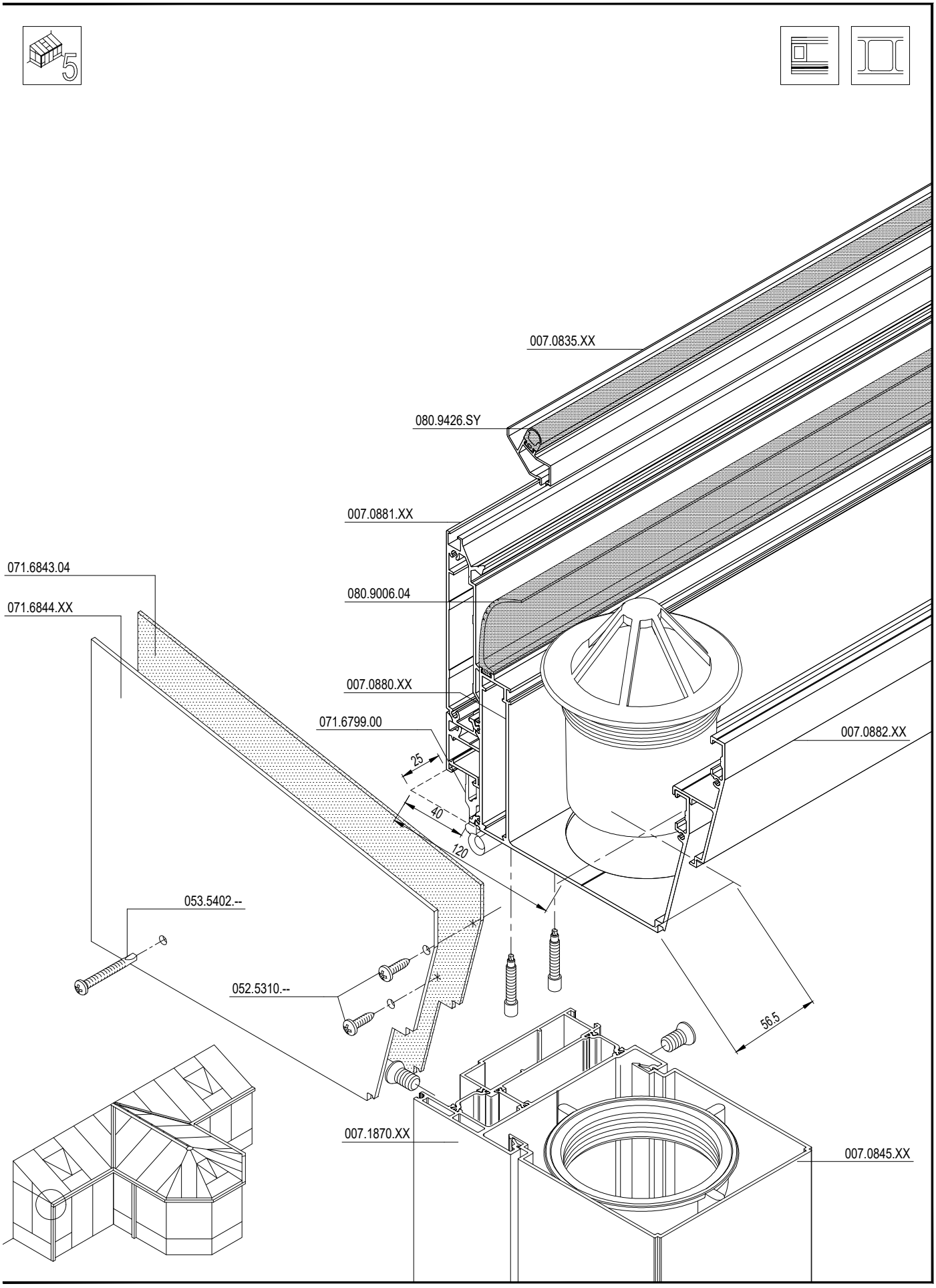

F

F

D0070252

VERANDAHOEK
COIN DE VERANDA
VERANDA CORNER
WINTERGARTENECKE

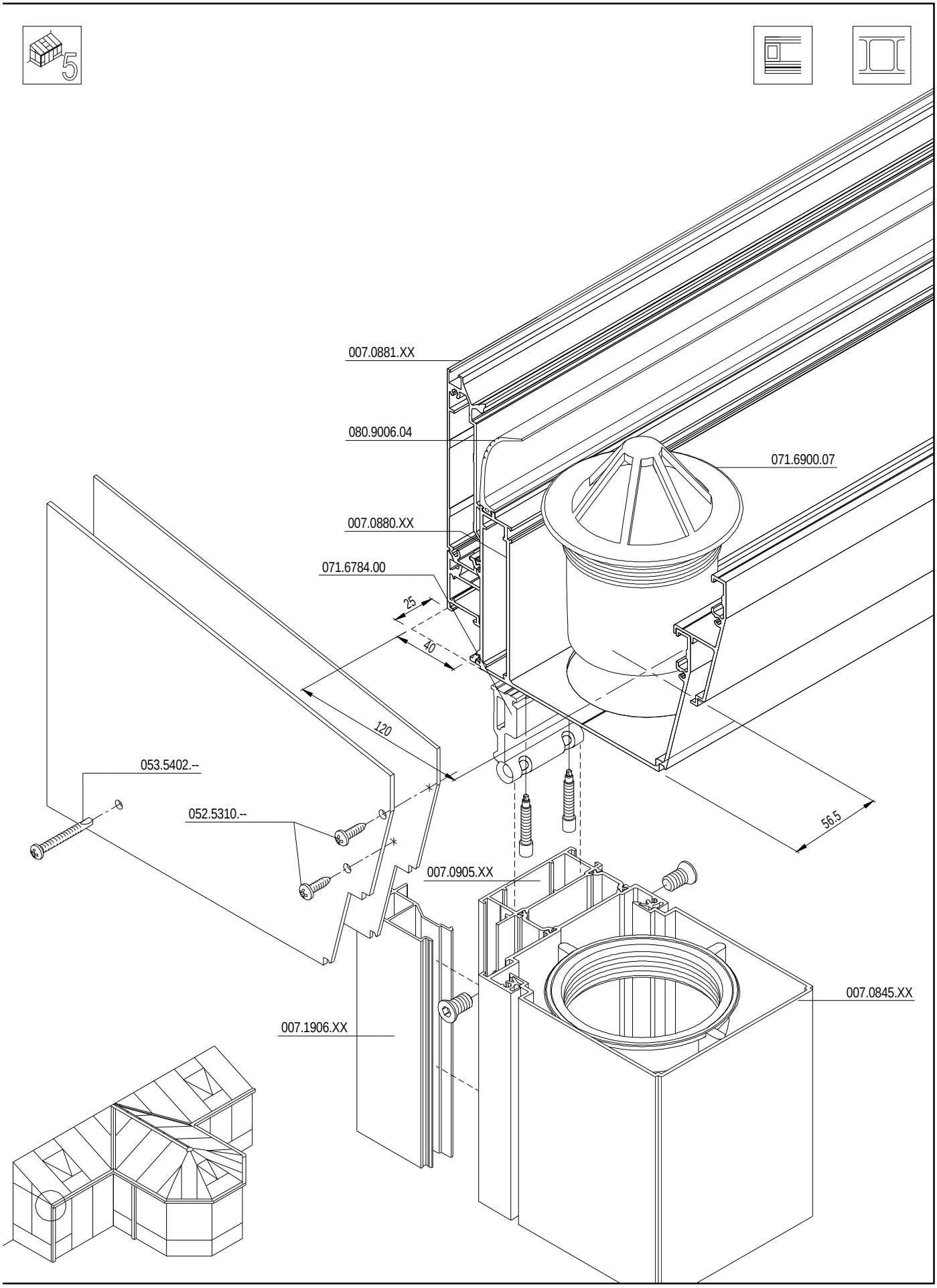

F

CR 120

MIDDENSTEUN
SUPPORT CENTRALE
CENTRAL SUPPORT
MITTELSTUETZE

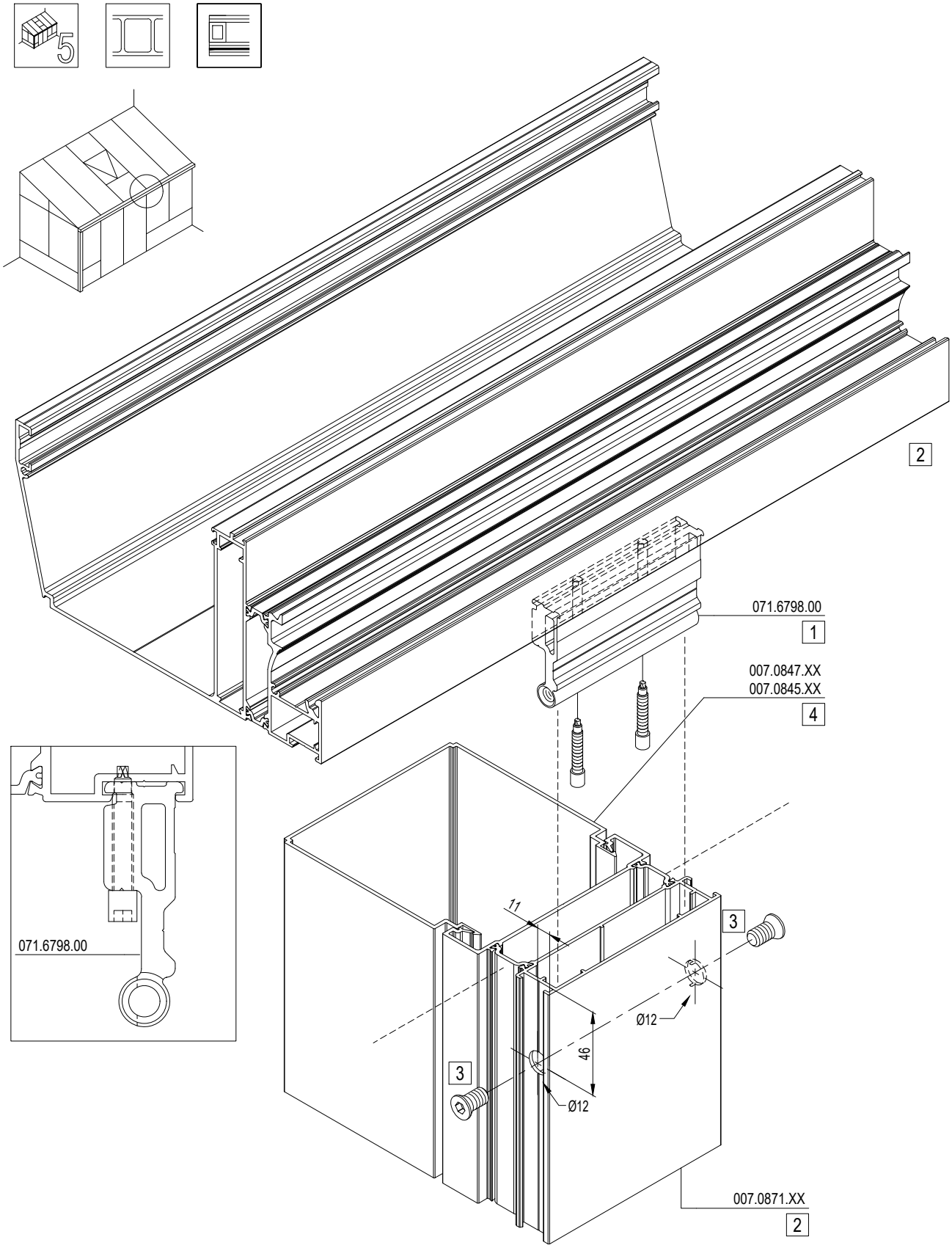

MONTAGEVOLGORDE
L 'ORDRE DE MONTAGE
THE ORDER OF ASSEMBLY
MONTAGEREIHENFOLGE

1 2 3 .

D0070130

F

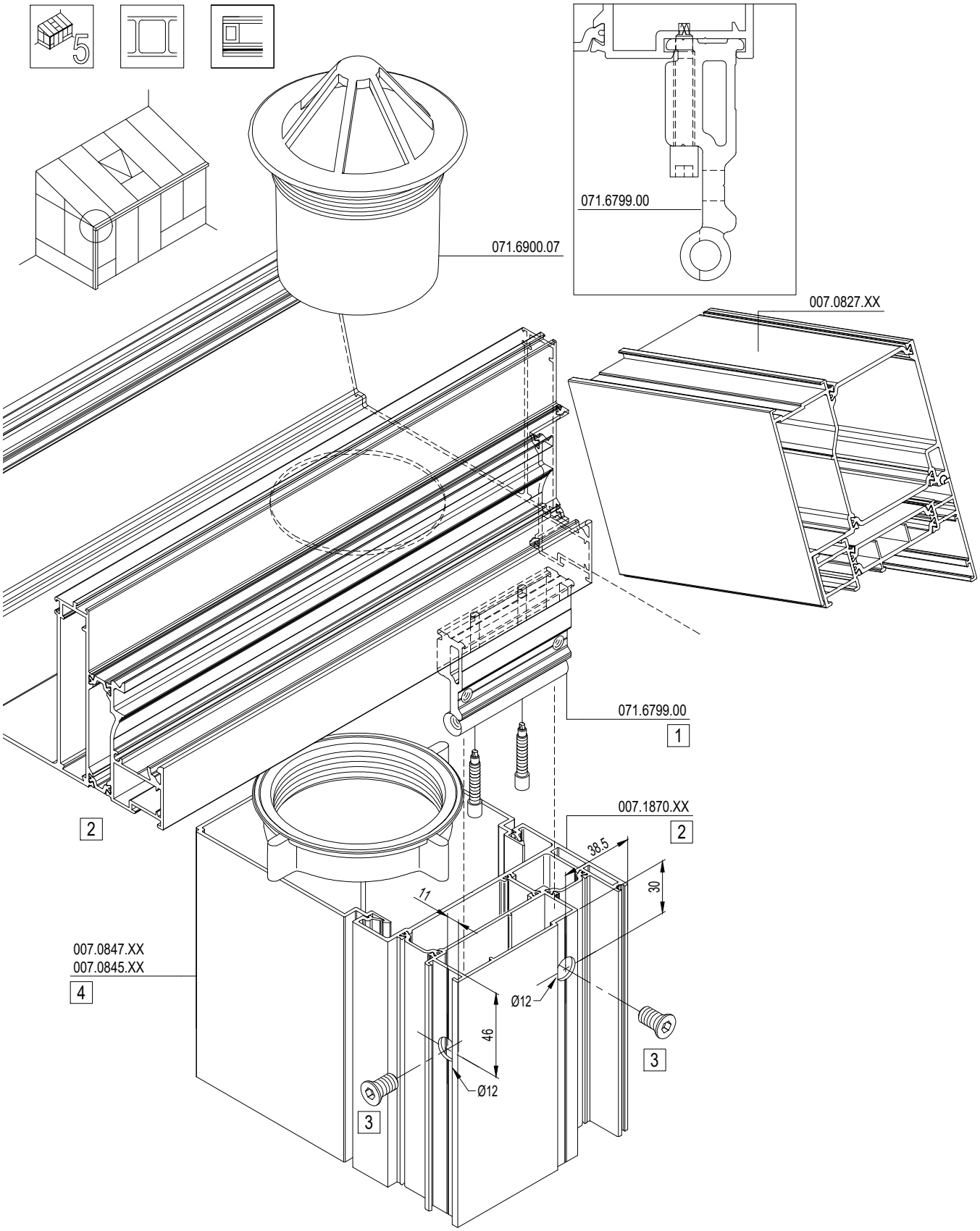

MONTAGEVOLGORDE L 'ORDRE DE MONTAGE THE ORDER OF ASSEMBLY MONTAGEREIHENFOLGE	1	2	3	.

D0070130

F

CR 120

MIDDENSTEUN
SUPPORT CENTRALE
CENTRAL SUPPORT
MITTELSTUETZE

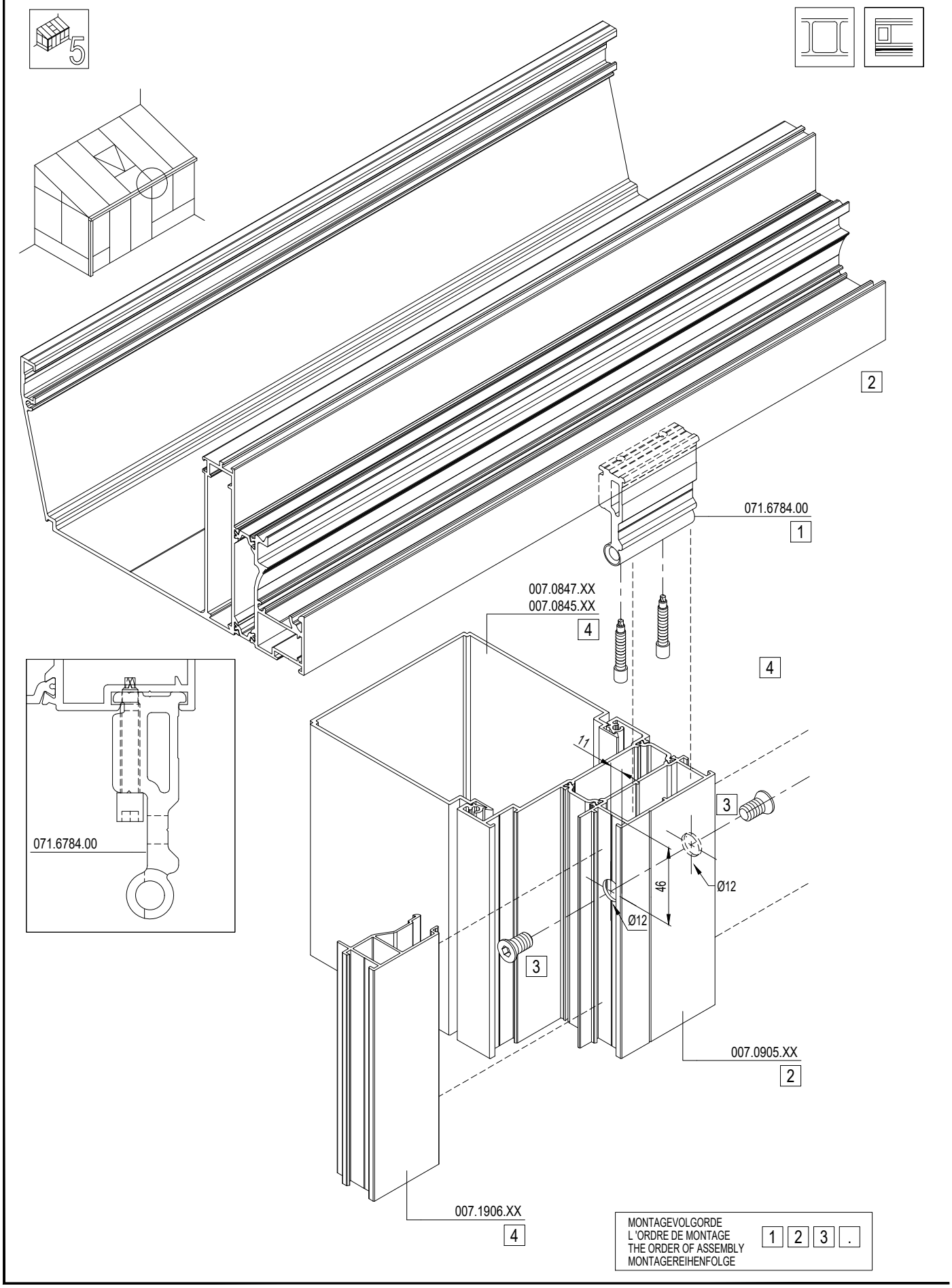

F

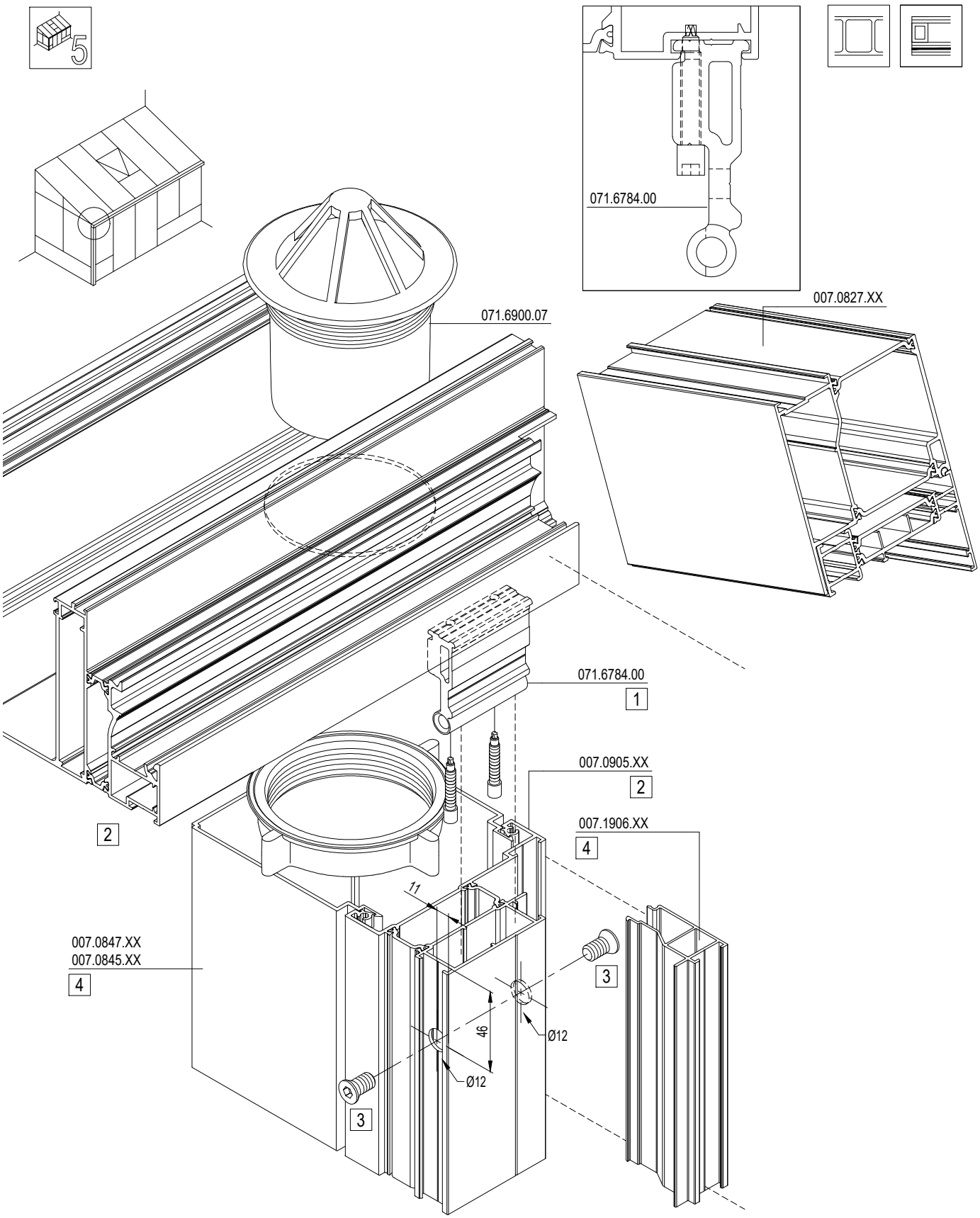

MONTAGEVOLGORDE L 'ORDRE DE MONTAGE THE ORDER OF ASSEMBLY MONTAGEREIHENFOLGE	1	2	3	.

D0069869

F

VERANDAHOEK
COIN DE VERANDA
VERANDA CORNER
WINTERGARTENECKE

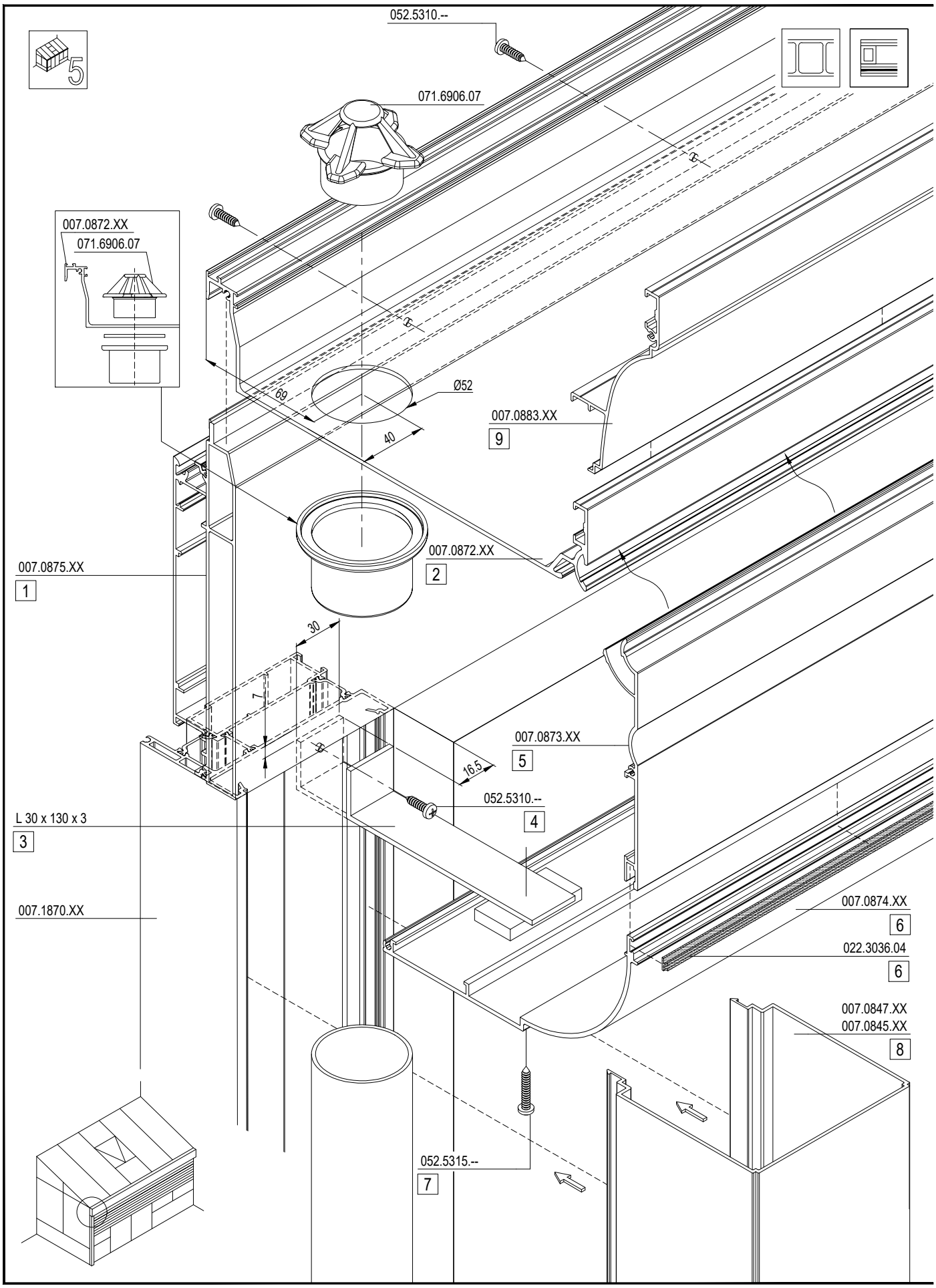

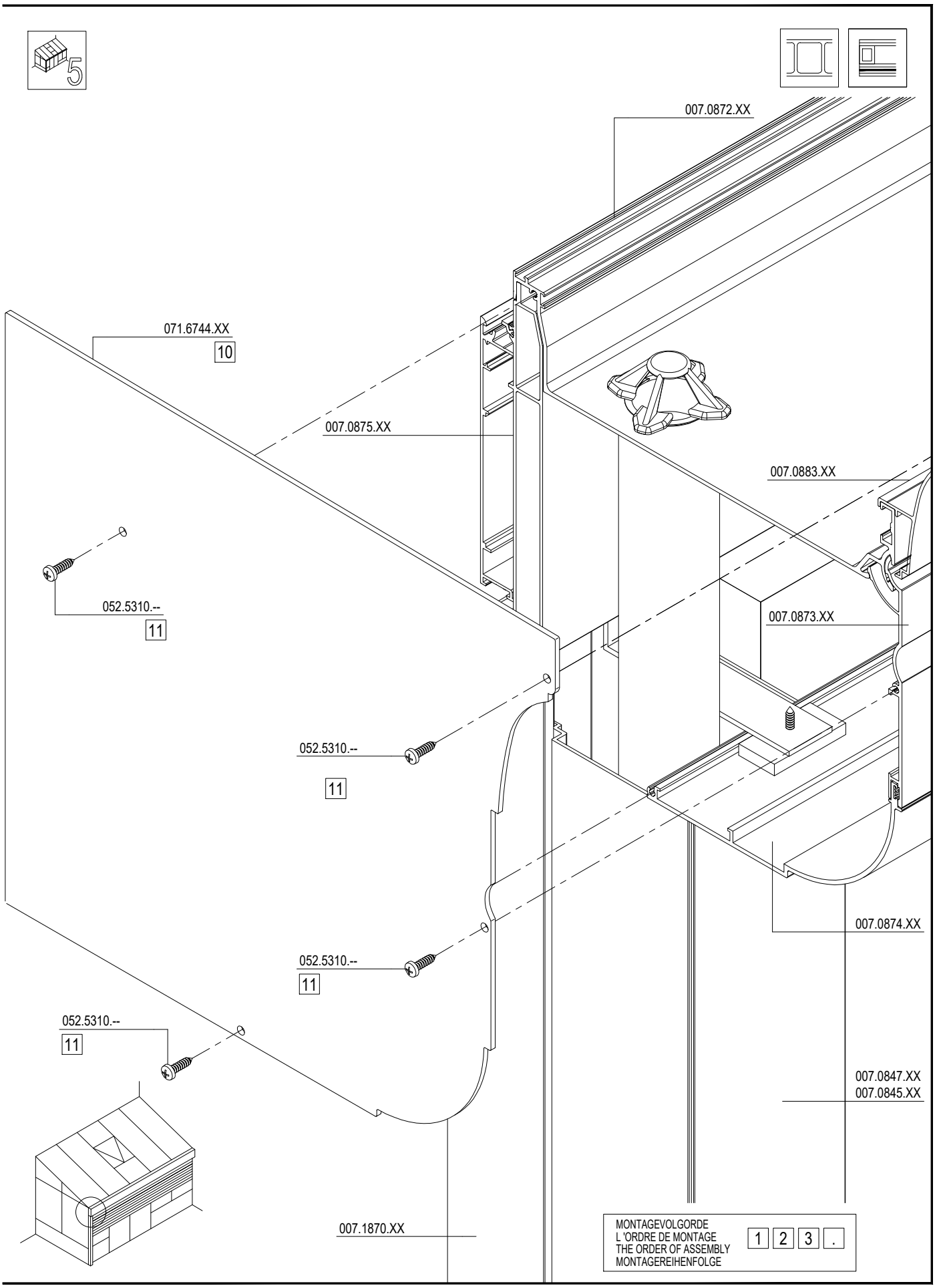
5
007.0872.XX
071.6744.XX
10
007.0875.XX
007.0883.XX
052.5310.--
11
007.0873.XX
052.5310.--
11
007.0874.XX
052.5310.--
11
052.5310.--
11
007.0847.XX
007.0845.XX
007.1870.XX
MONTAGEVOLGORDE
L 'ORDRE DE MONTAGE
THE ORDER OF ASSEMBLY
MONTAGEREIHENFOLGE
1 2 3 .
D0069871

F

VERANDAHOEK
COIN DE VERANDA
VERANDA CORNER
WINTERGARTENECKE

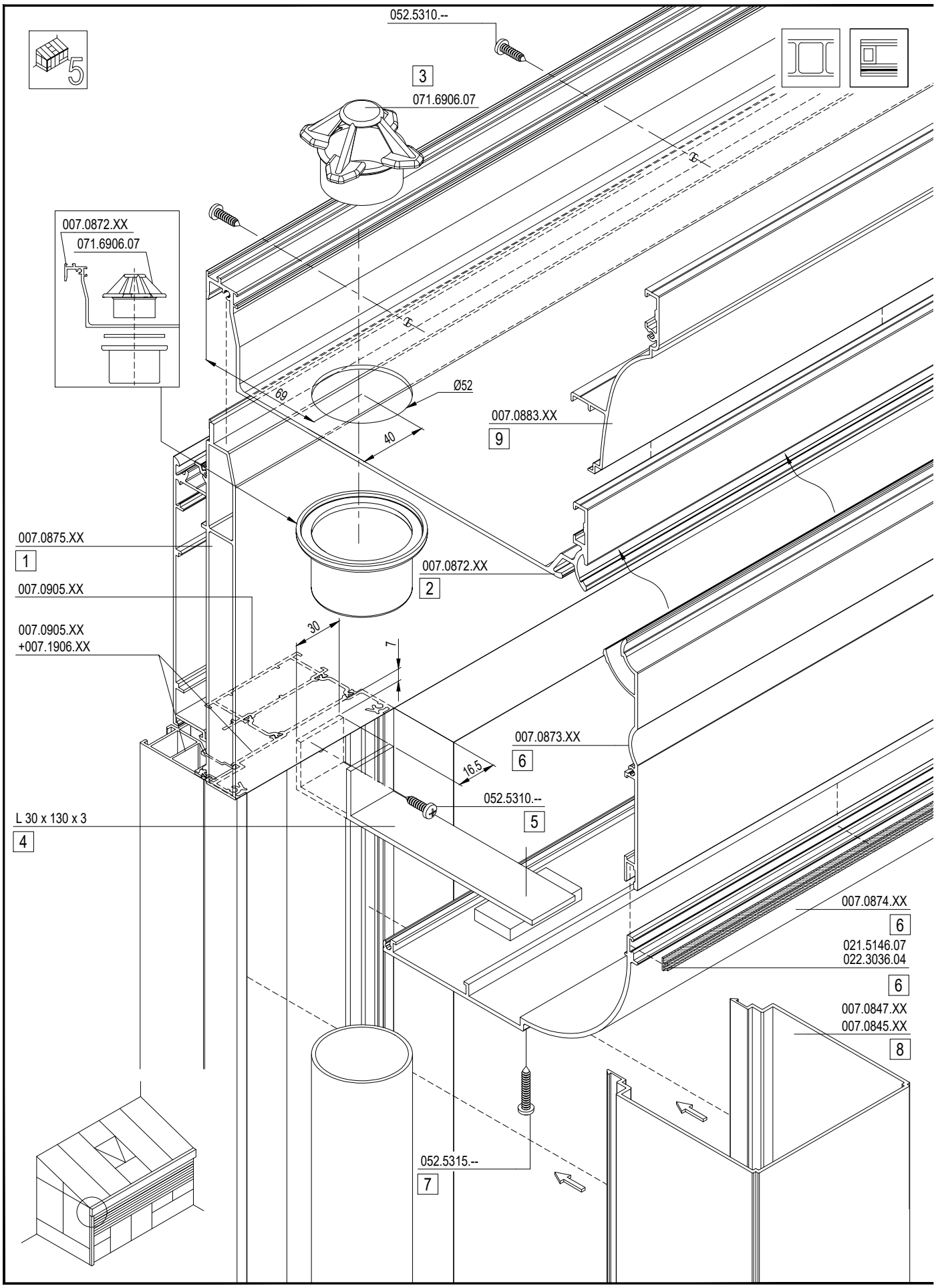

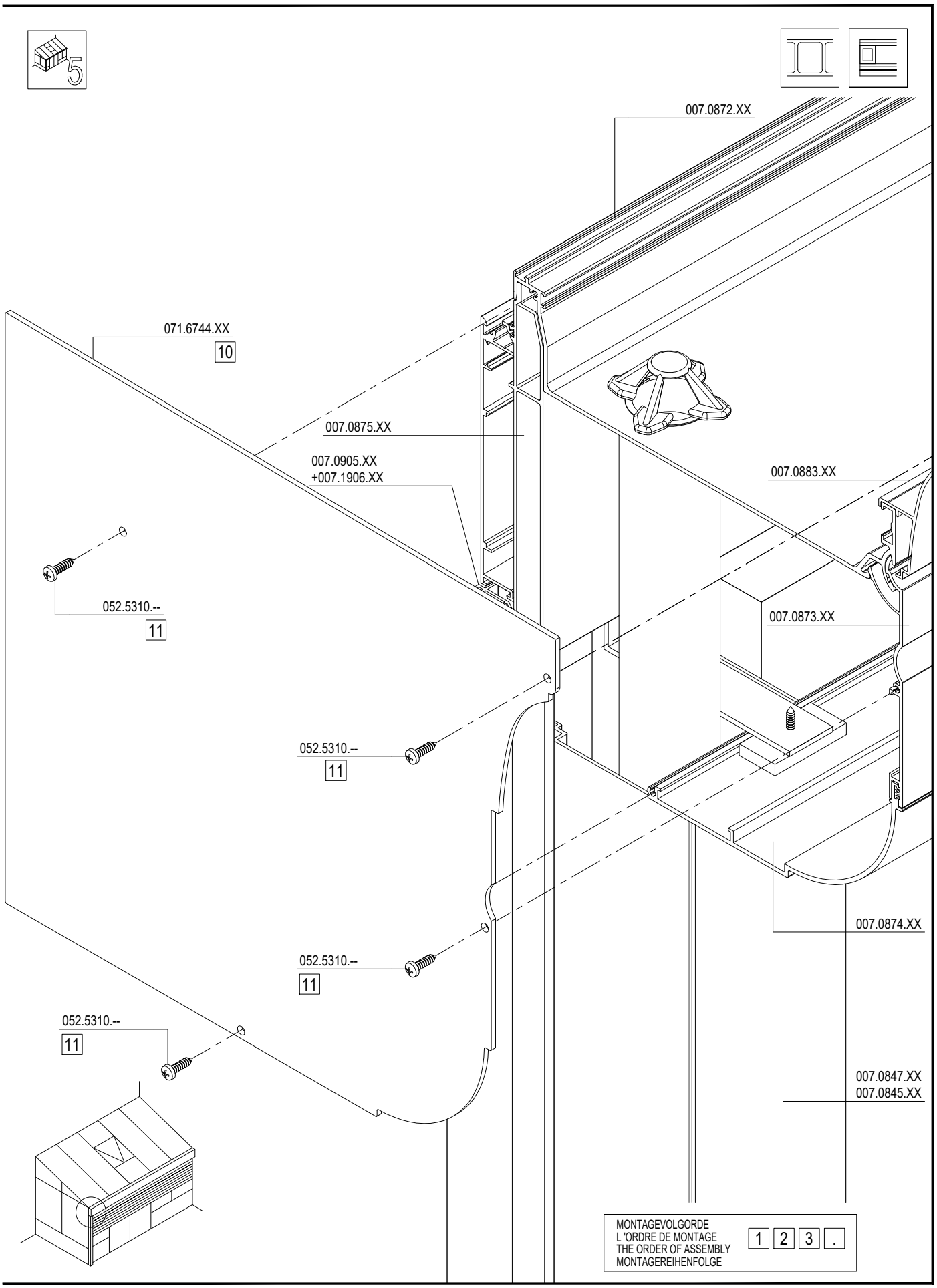
5
007.0872.XX
071.6744.XX
10
007.0875.XX
007.0905.XX
+007.1906.XX
007.0883.XX
052.5310.--
11
007.0873.XX
052.5310.--
11
007.0874.XX
052.5310.--
11
052.5310.--
11
007.0847.XX
007.0845.XX
MONTAGEVOLGORDE
L 'ORDRE DE MONTAGE
THE ORDER OF ASSEMBLY
MONTAGEREIHENFOLGE
1 2 3 .
D0069872

F

VERANDAHOEK MUUR
COIN DE VERANDA MURAL
VERANDA CORNER WALL
WINTERGARTENECKE MAUER

D0070131

VERANDAHOEK MUUR
COIN DE VERANDA MURAL
VERANDA CORNER WALL
WINTERGARTENECKE MAUER

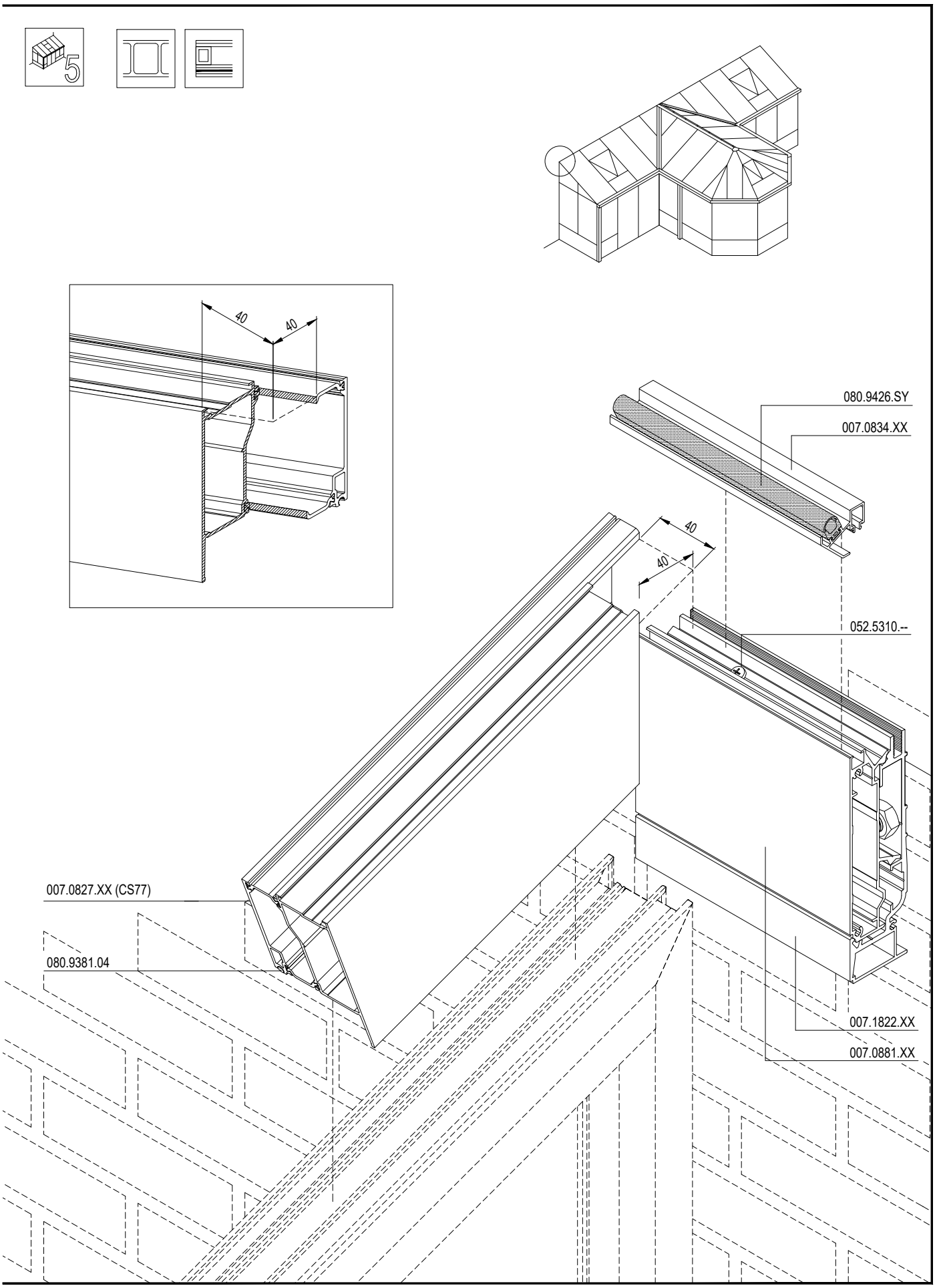

NOK-GOOTVERBINDING
RACCORDEMENT FAITIERE-GOUTTIERE
RIDGE-GUTTER CONNECTION
FIRST-RINNENVERBINDUNG

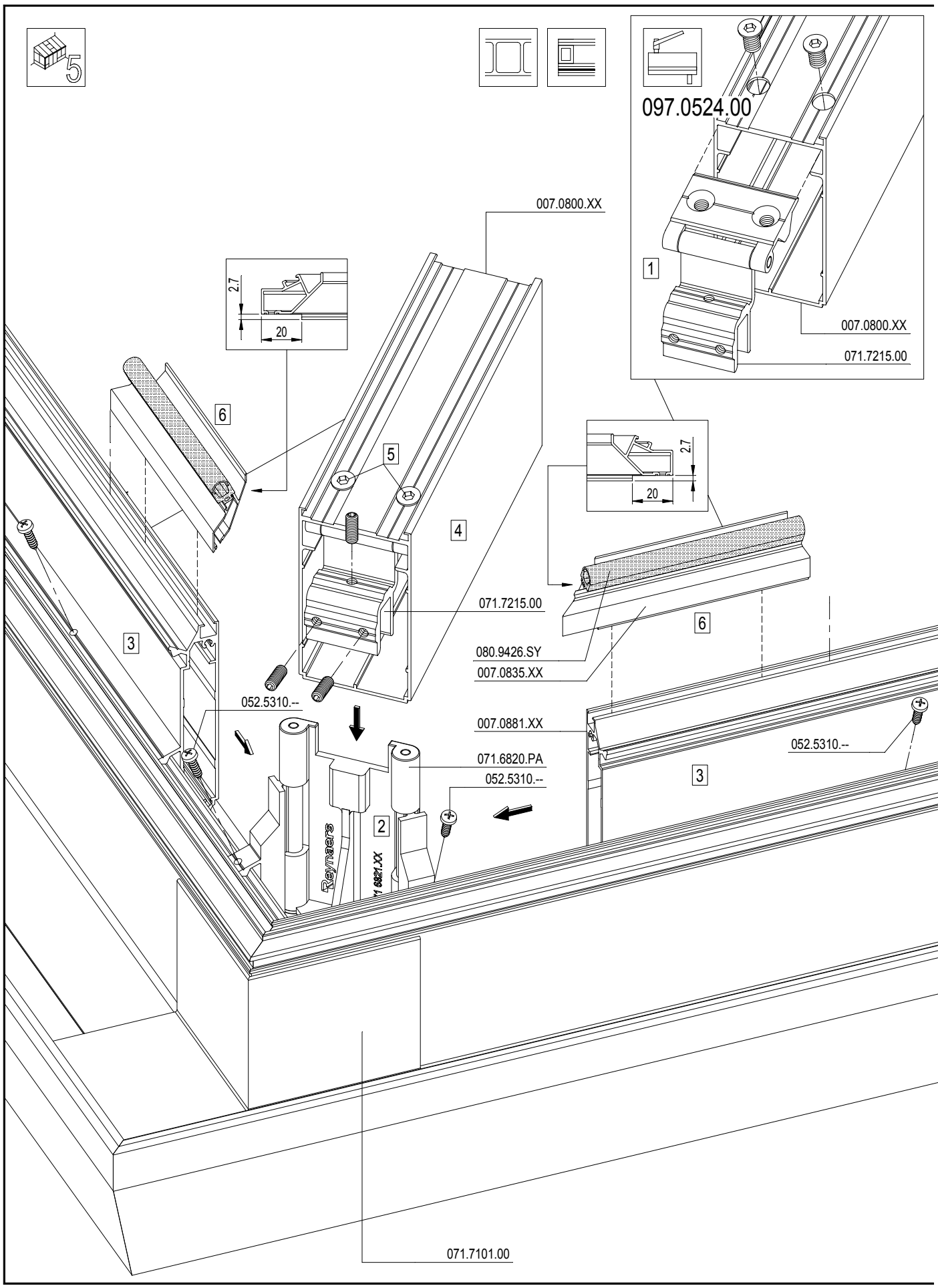

F

NOK-GOOTVERBINDING
RACCORDEMENT FAITIERE-GOUTTIERE
RIDGE-GUTTER CONNECTION
FIRST-RINNENVERBINDUNG

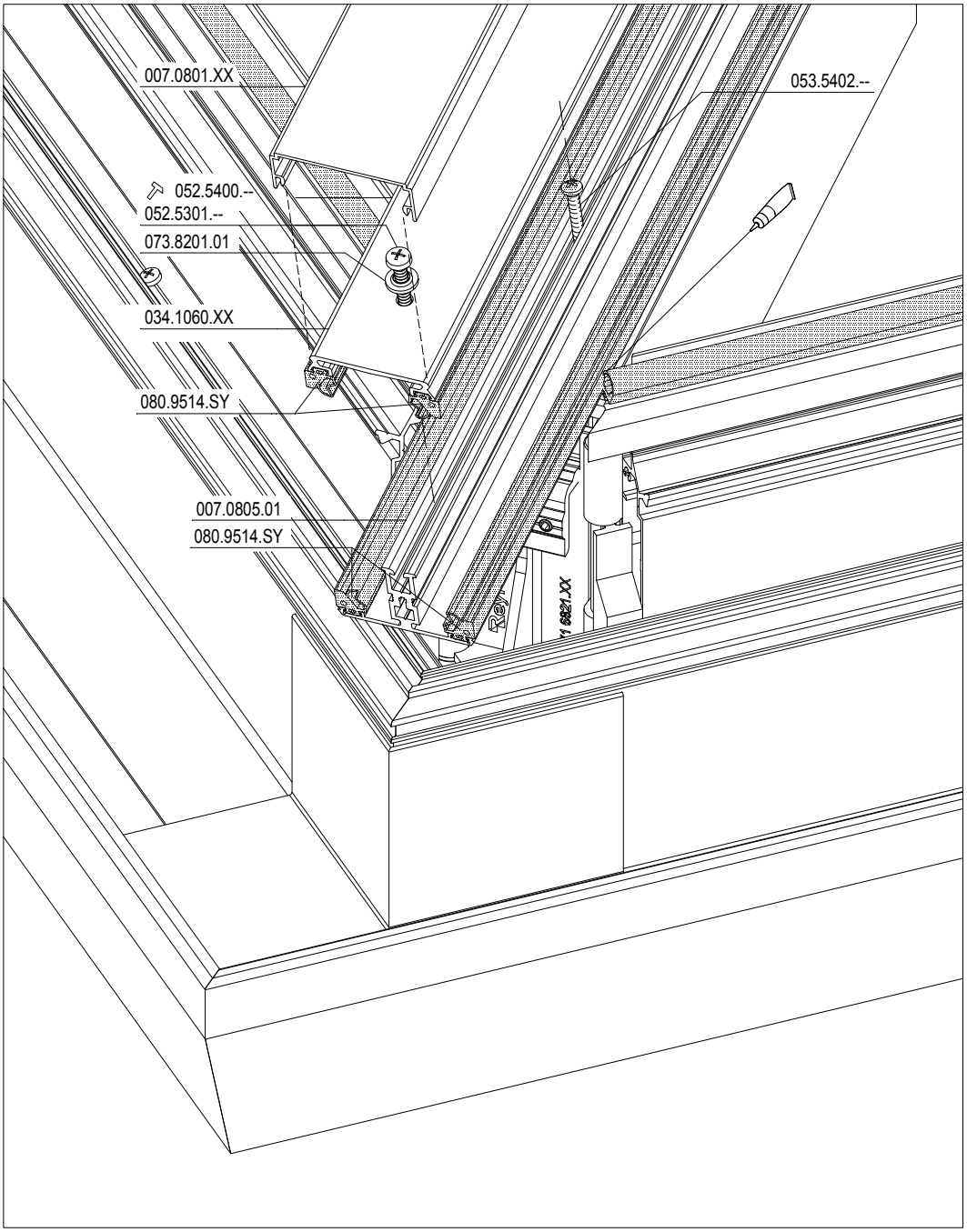

$5° < \alpha < 45°$

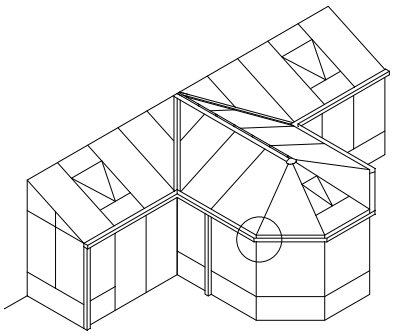

F

D0070132

NOK-GOOTVERBINDING
RACCORDEMENT FAITIERE-GOUTTIERE
RIDGE-GUTTER CONNECTION
FIRST-RINNENVERBINDUNG

D0023421

NOK-GOOTVERBINDING
RACCORDEMENT FAITIERE-GOUTTIERE
RIDGE-GUTTER CONNECTION
FIRST-RINNENVERBINDUNG

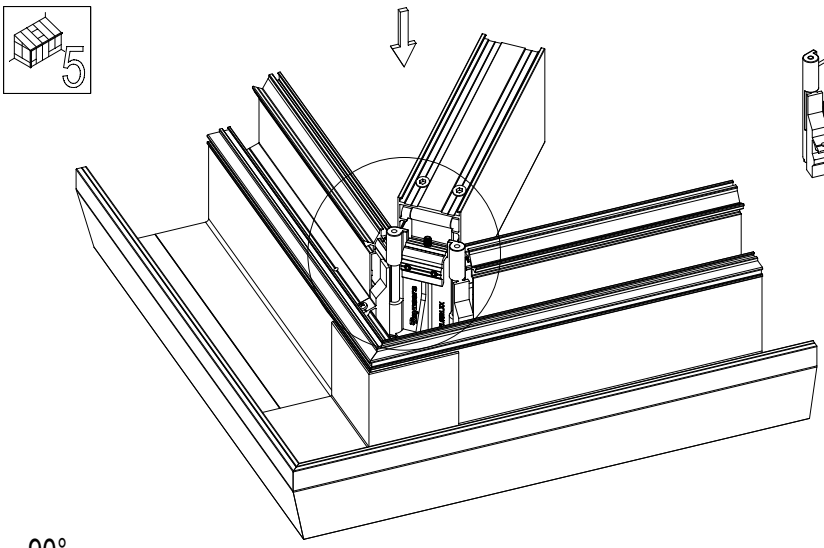

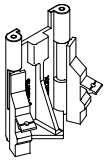

071.6820.PA

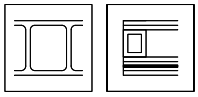

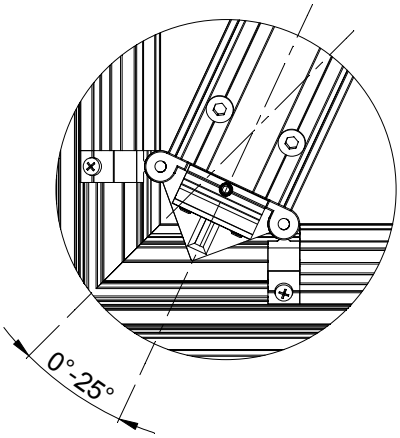

90°

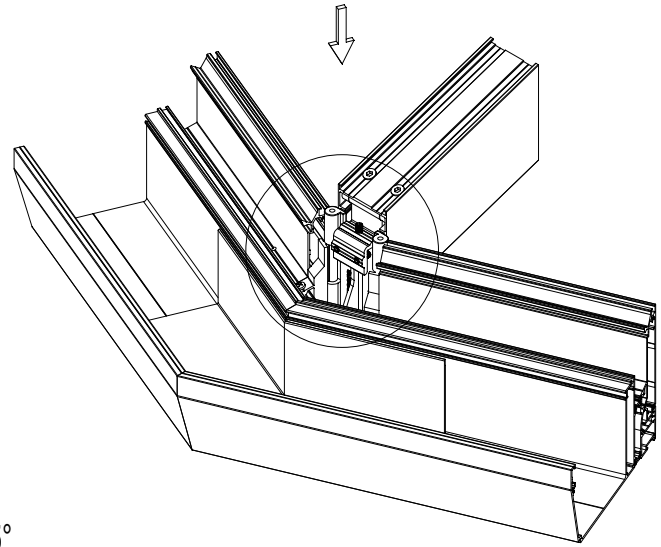

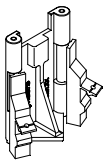

071.6820.PA

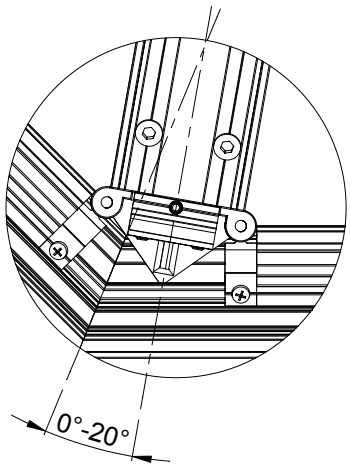

135°

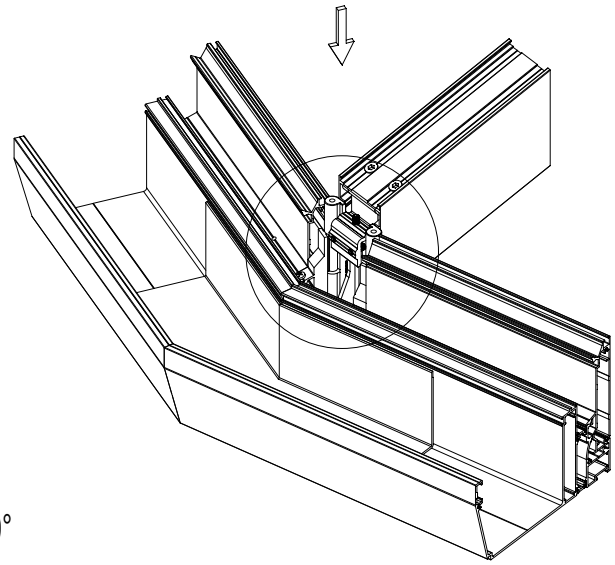

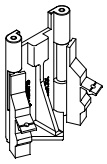

071.6820.PA

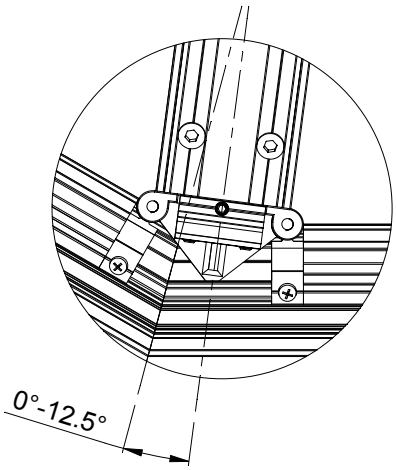

150°

F

D0023421

NOK-MUURVERBINDING
RACCORDEMENT FAITIERE-MUR
RIDGE-WALL CONNECTION
FIRST-WANDVERBINDUNG

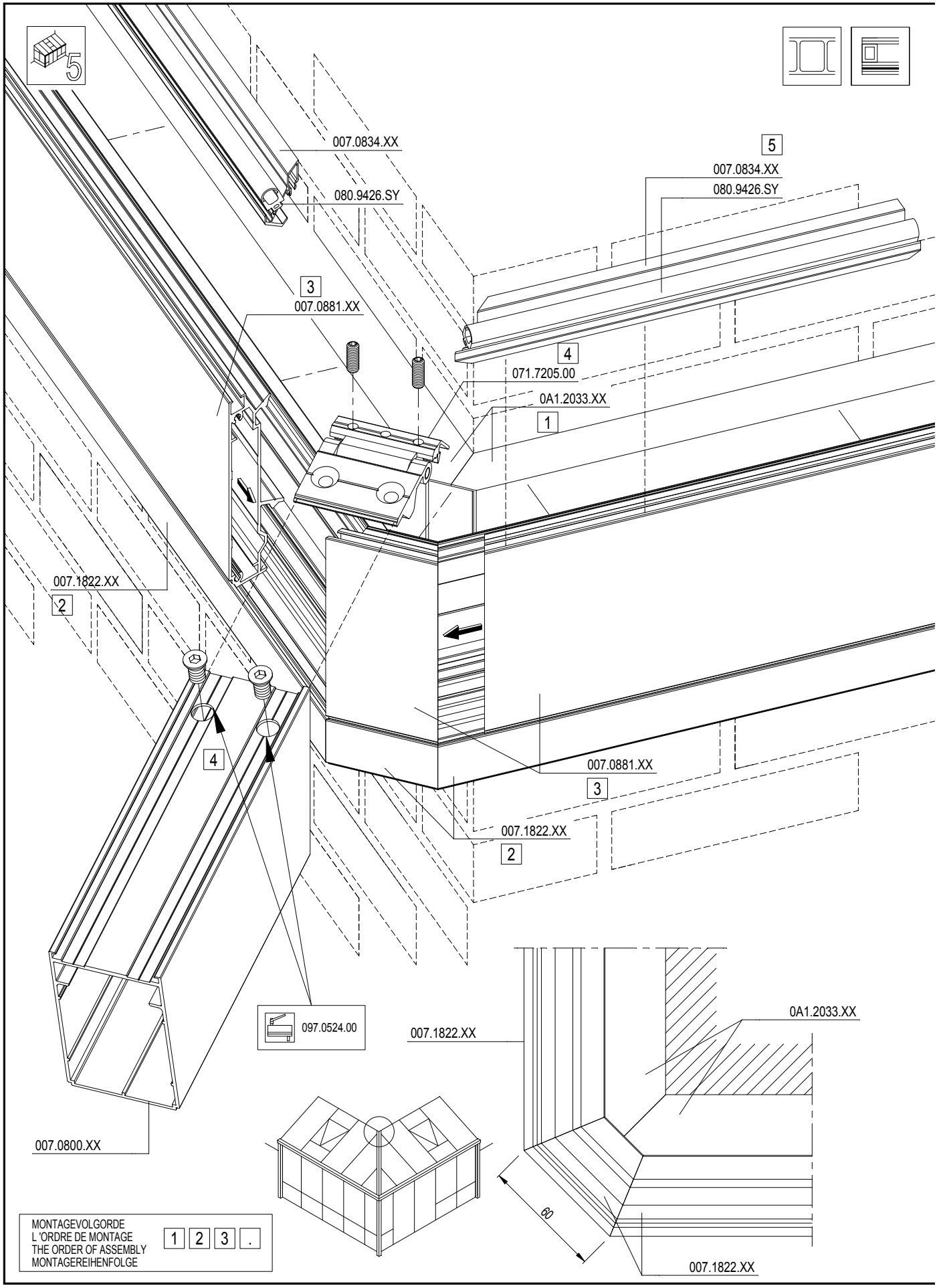

F

NOK-MUURVERBINDING
RACCORDEMENT FAITIERE-MUR
RIDGE-WALL CONNECTION
FIRST-WANDVERBINDUNG

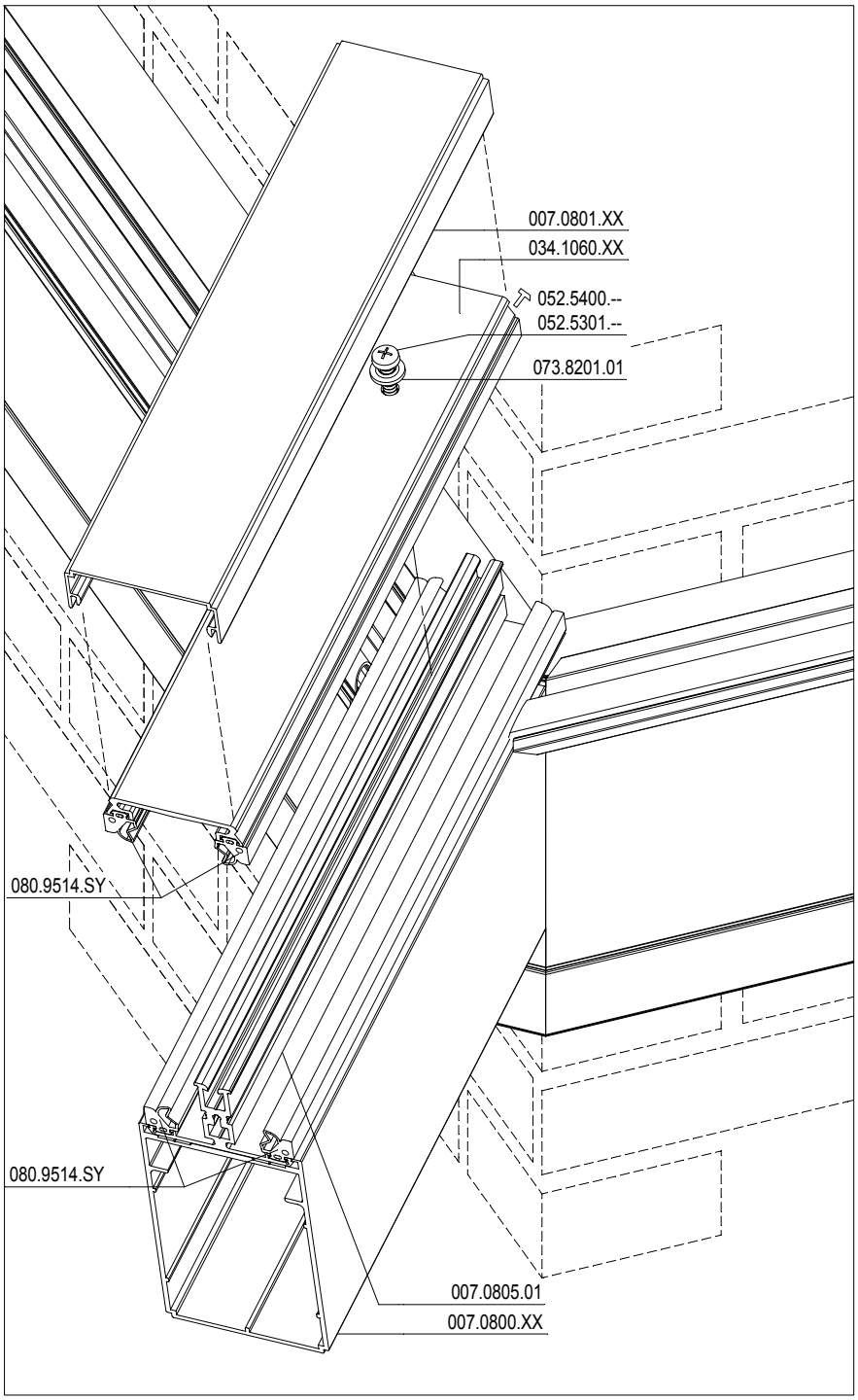

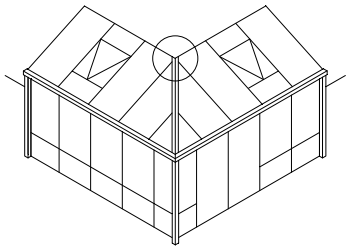

$5° < \alpha < 45°$

F

D0070133

DAL-GOOTVERBINDING
RACCORDEMENT NOUE-GOUTTIERE
VALLEY-GUTTER CONNECTION
KEHL-RINNENVERBINDUNG

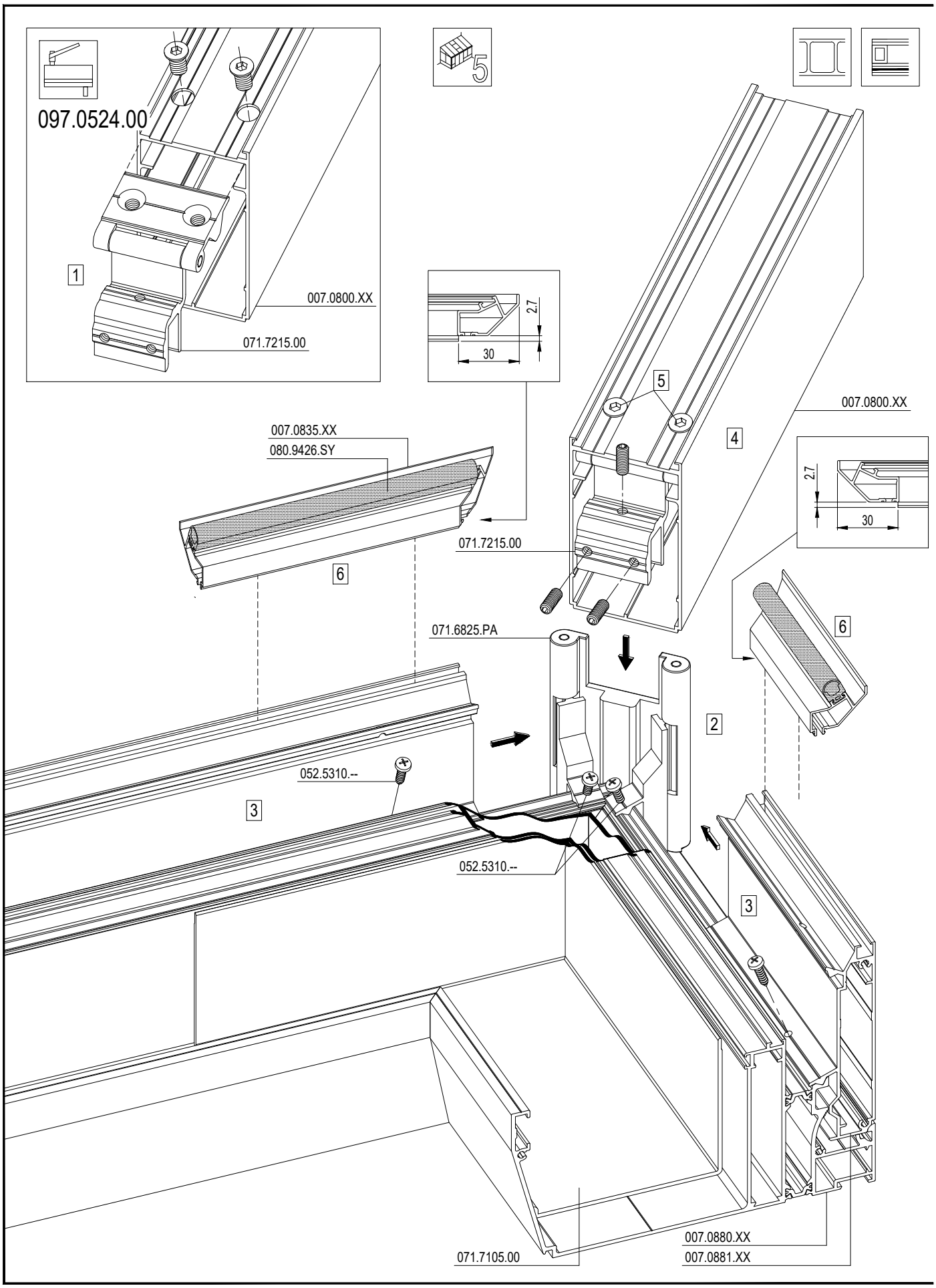

DAL-GOOTVERBINDING
RACCORDEMENT NOUE-GOUTTIERE
VALLEY-GUTTER CONNECTION
KEHL-RINNENVERBINDUNG

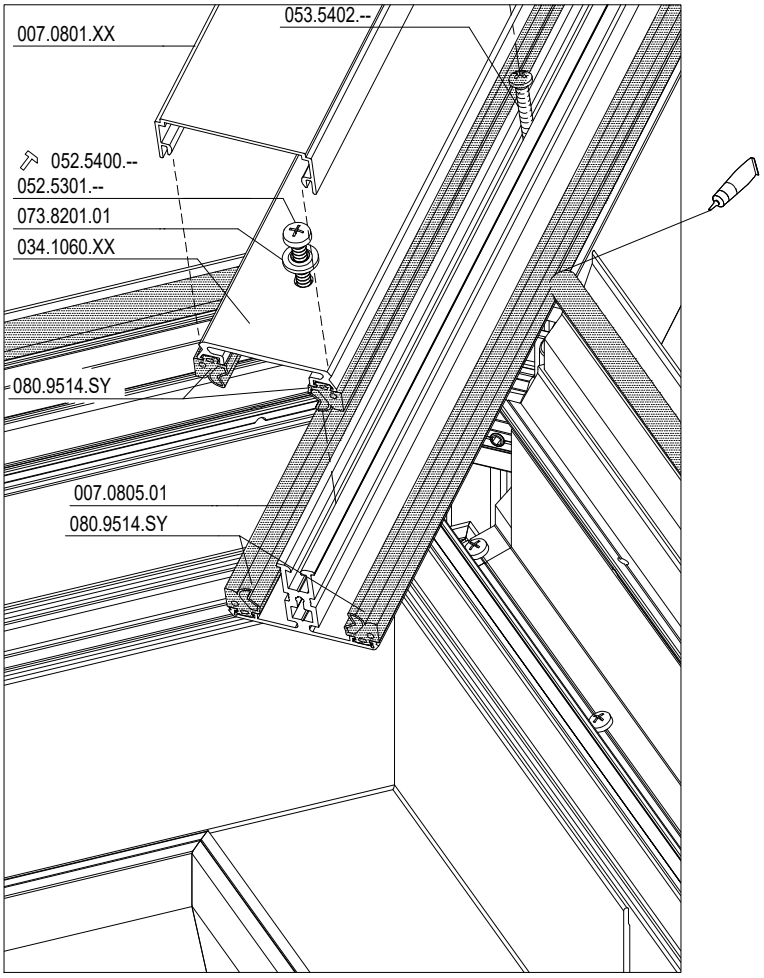

$5° < \alpha < 30°$

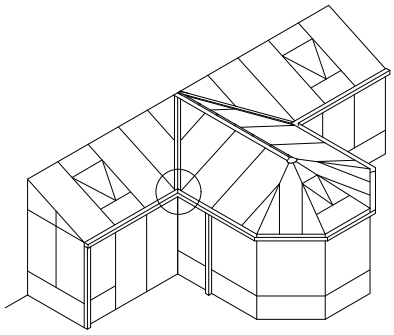

F

D0070134

DAL-GOOTVERBINDING
RACCORDEMENT NOUE-GOUTTIERE
VALLEY-GUTTER CONNECTION
KEHL-RINNENVERBINDUNG

D0041444

DAL-GOOTVERBINDING
RACCORDEMENT NOUE-GOUTTIERE
VALLEY-GUTTER CONNECTION
KEHL-RINNENVERBINDUNG

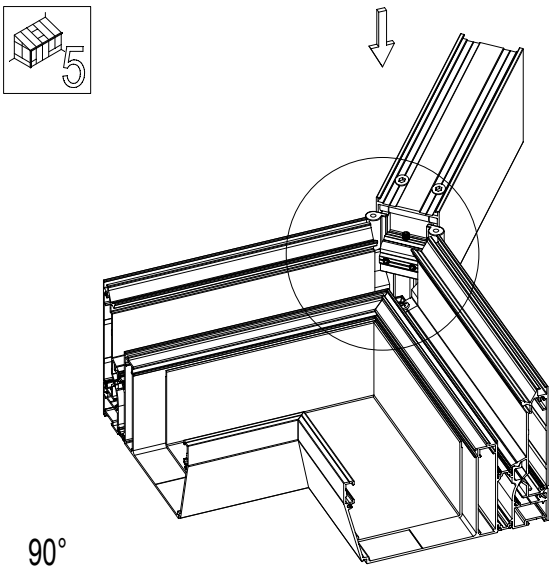

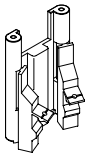

071.6825.PA

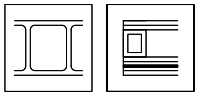

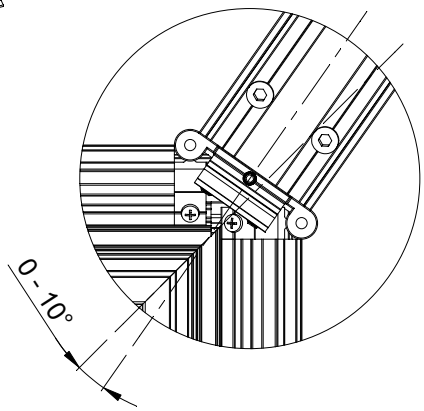

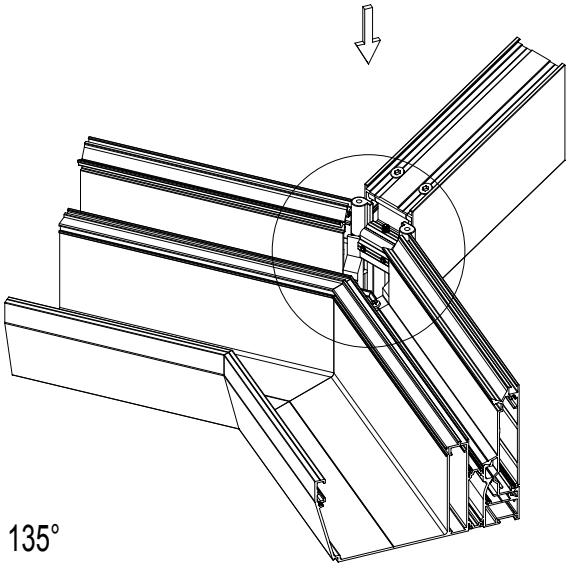

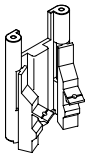

071.6825.PA

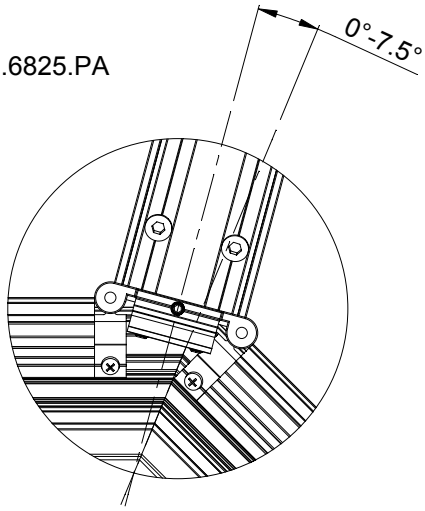

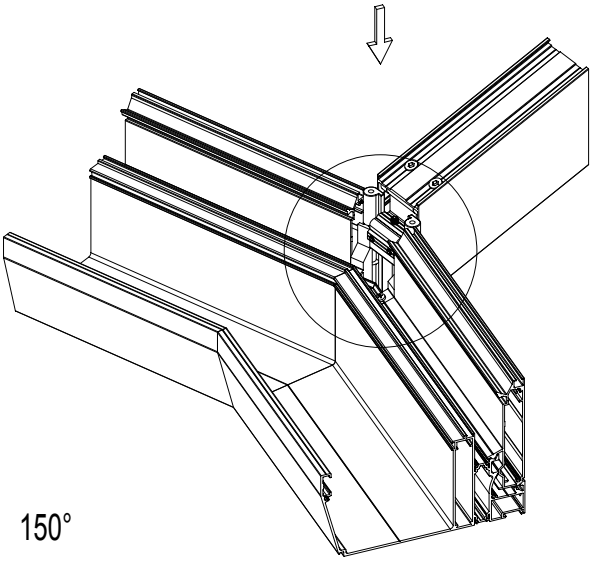

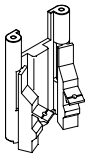

071.6825.PA

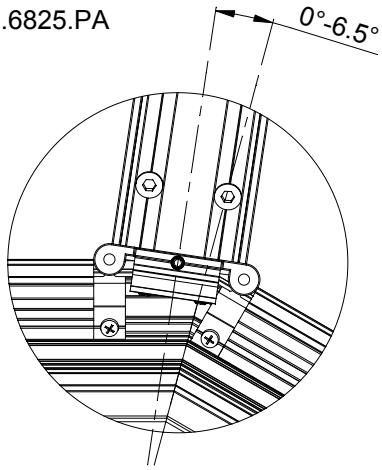

F

D0041444

DAL-MUURVERBINDING
RACCORDEMENT NOUE-MUR
VALLEY-WALL CONNECTION
KEHL-WANDVERBINDUNG

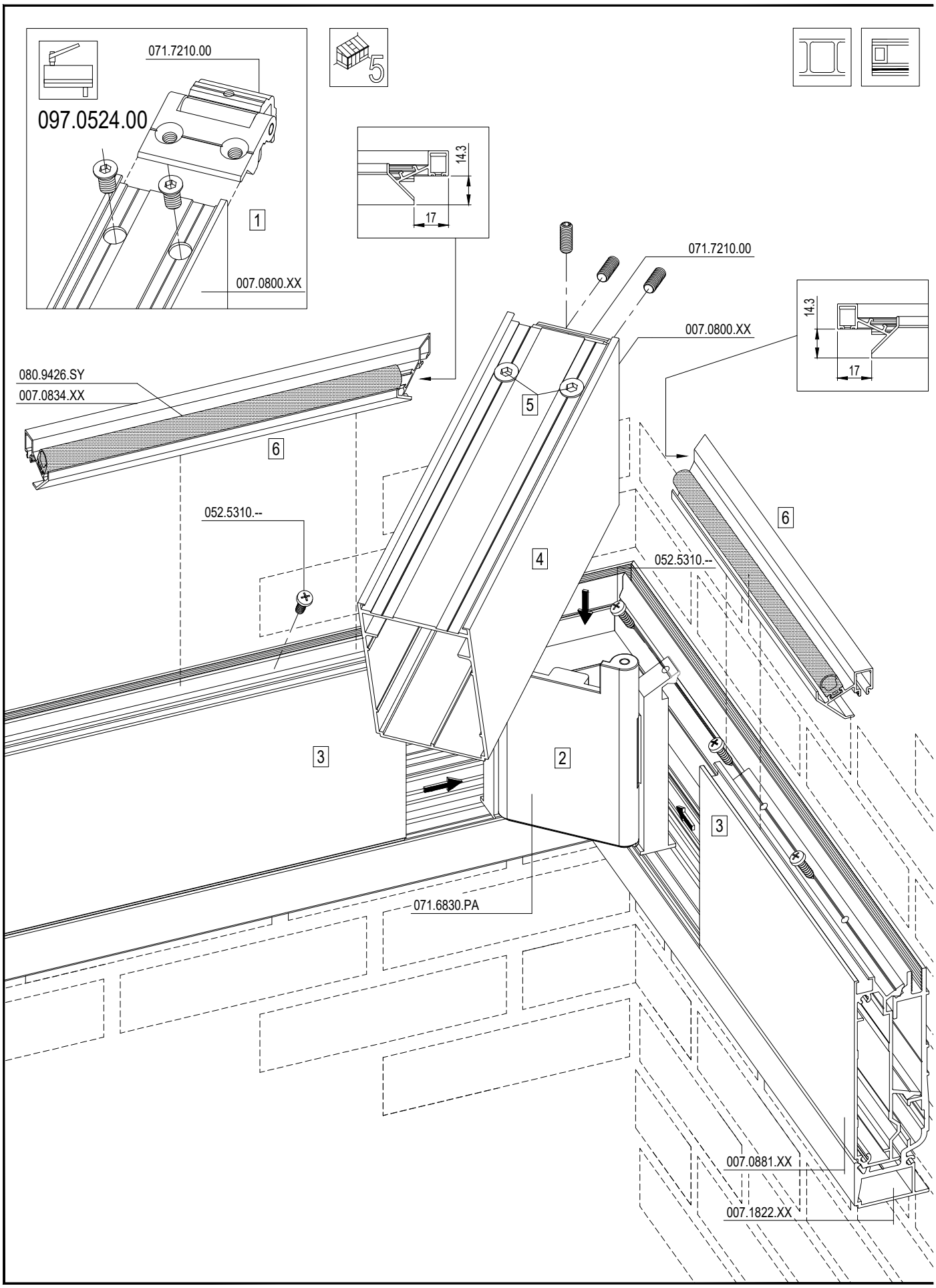

DAL-MUURVERBINDING
RACCORDEMENT NOUE-MUR
VALLEY-WALL CONNECTION
KEHL-WANDVERBINDUNG

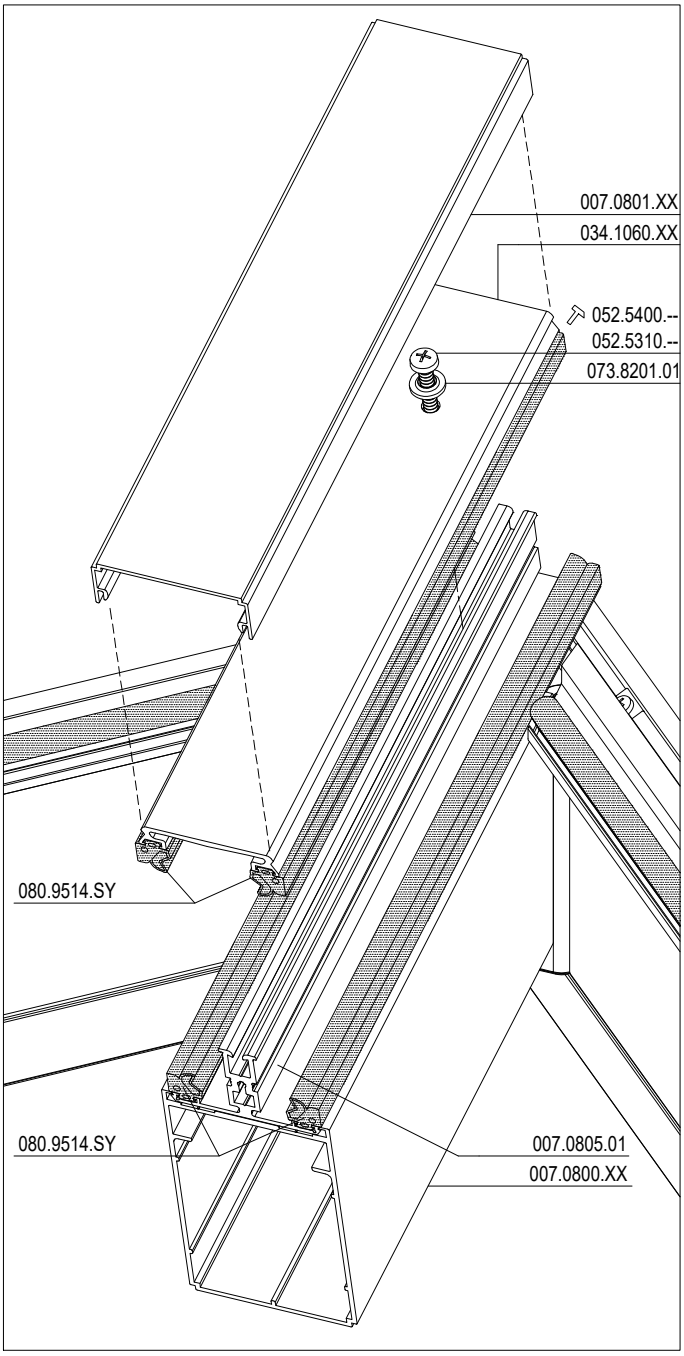

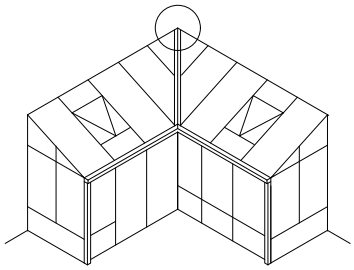

$5° < \alpha < 30°$

F

D0070135

DAL-MUURVERBINDING
RACCORDEMENT NOUE-MUR
VALLEY-WALL CONNECTION
KEHL-WANDVERBINDUNG

D0070136

DAL-MUURVERBINDING
RACCORDEMENT NOUE-MUR
VALLEY-WALL CONNECTION
KEHL-WANDVERBINDUNG

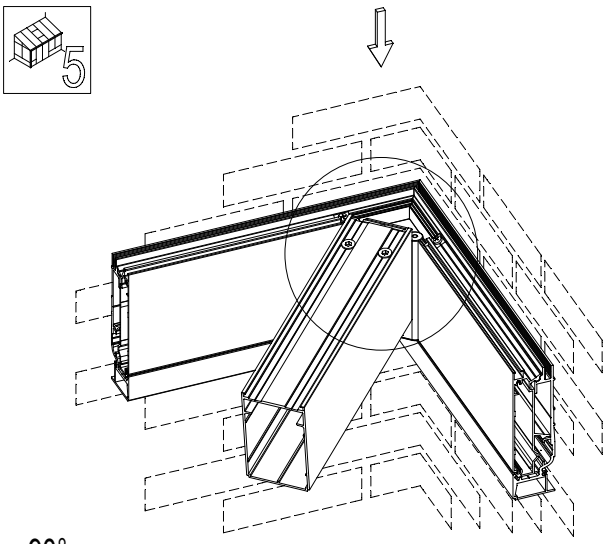

90°

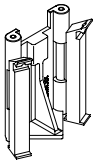

071.6830.PA

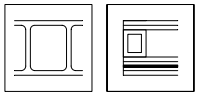

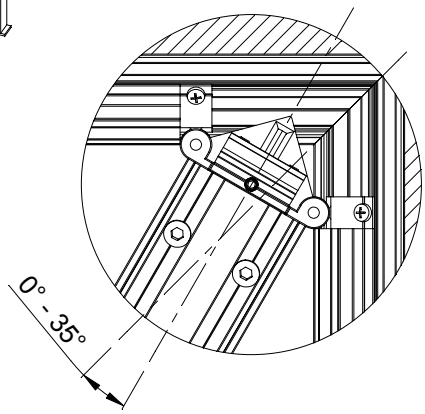

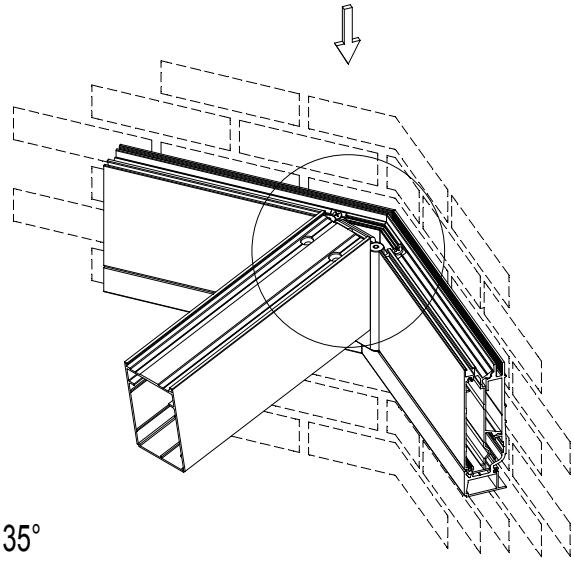

135°

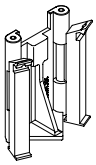

071.6830.PA

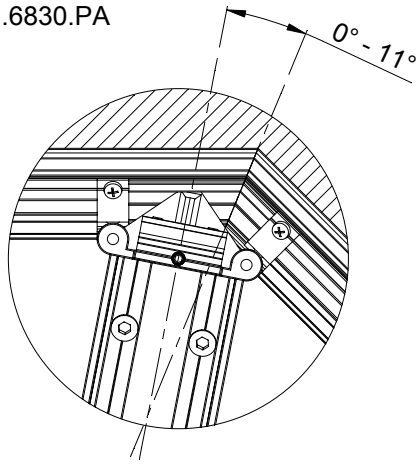

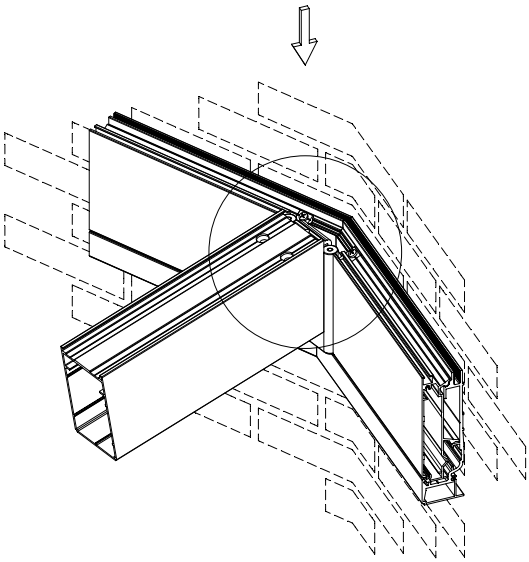

150°

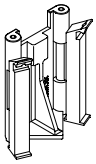

071.6830.PA

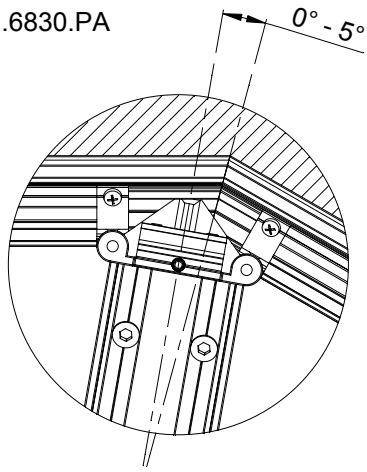

F

D0070136

DAL-NOKVERBINDING
RACCORDEMENT NOUE-FAITIERE
VALLEY-RIDGE CONNECTION
KEHL-FIRSTVERBINDUNG

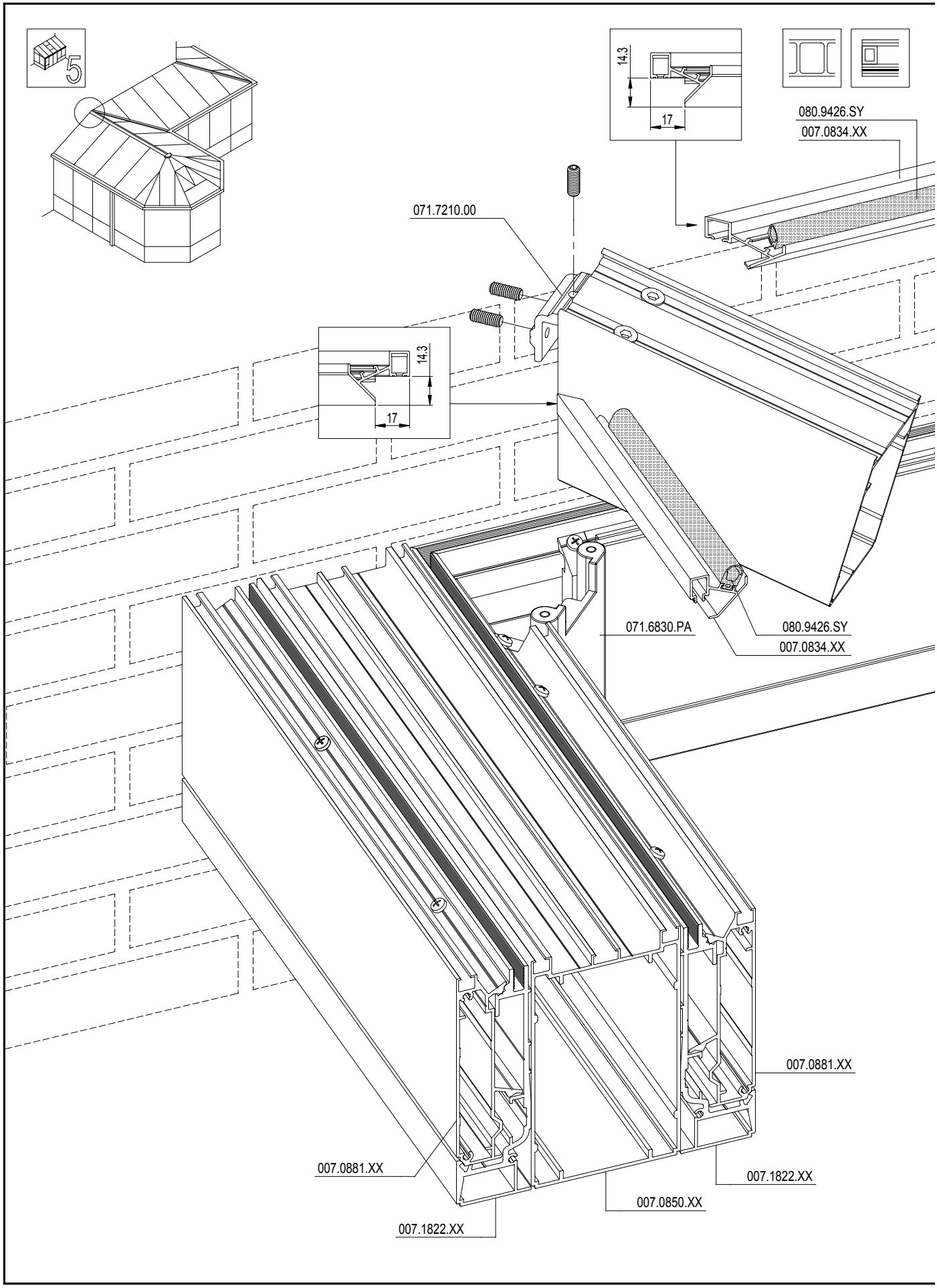

DAL-NOKVERBINDING
RACCORDEMENT NOUE-FAITIERE
VALLEY-RIDGE CONNECTION
KEHL-FIRSTVERBINDUNG

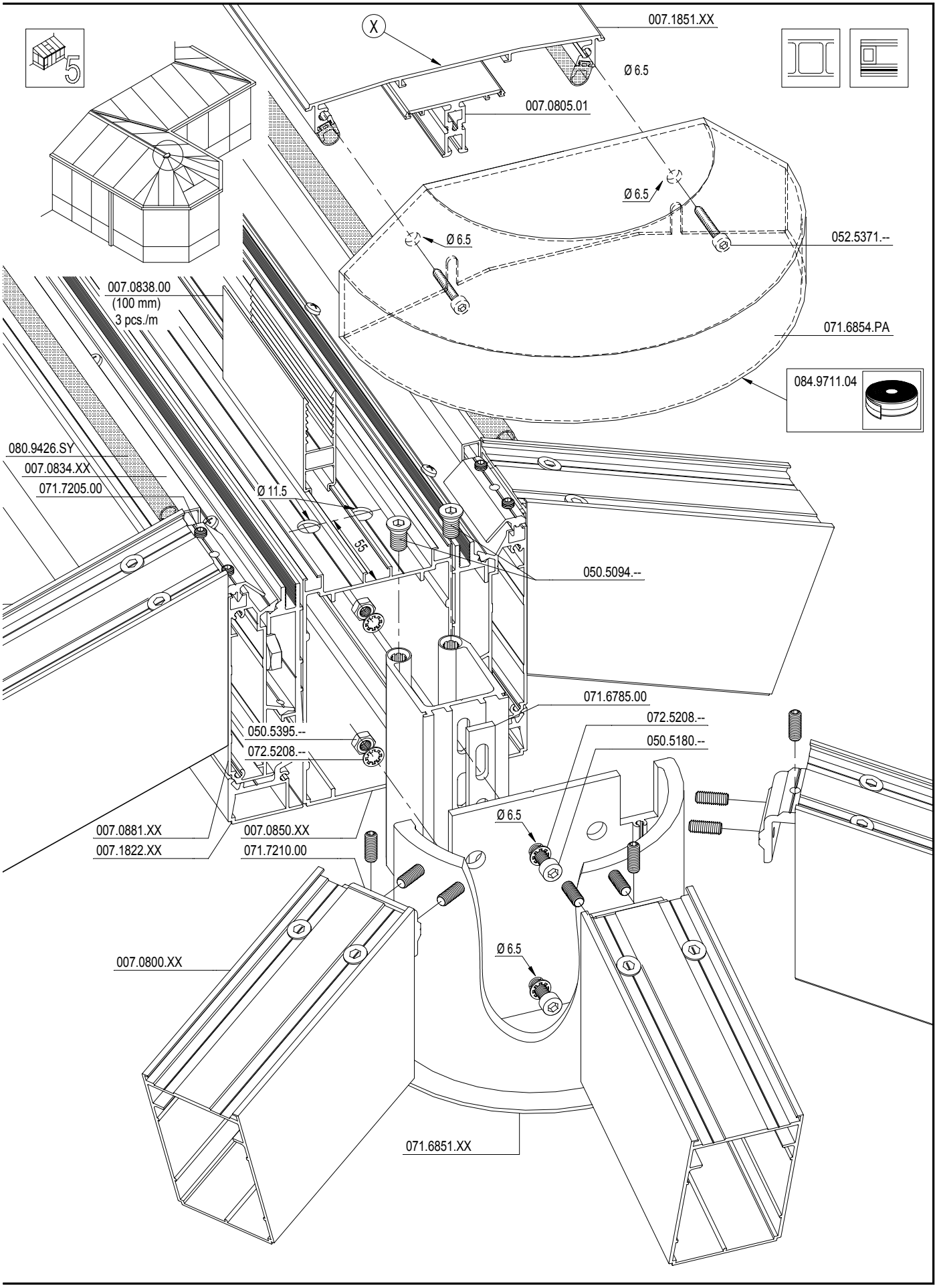

F

NOKBEVESTIGING
FIXATION DE LA FAITIERE
FIXATION OF THE RIDGE
FIRSTANSCHLUSS

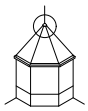

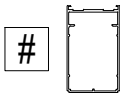

: min. 3 / max. 4

071.6861.XX

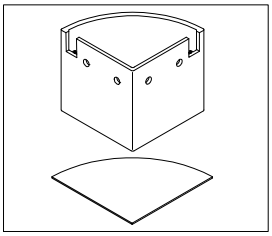

+

071.6864.PA

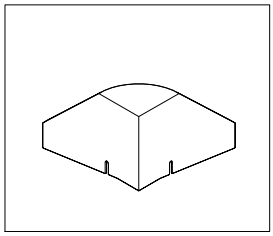

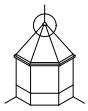

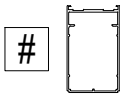

: min. 5 / max. 7

071.6980.XX

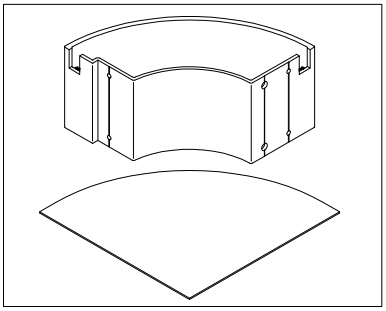

+

071.6983.PA

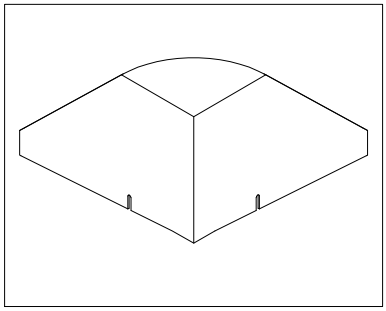

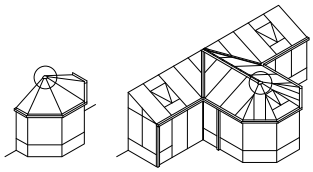

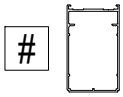

: min. 3 / max. 4

071.6851.XX

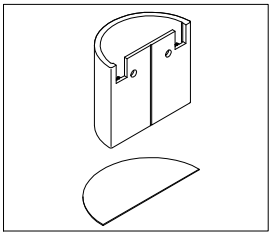

+

071.6854.PA

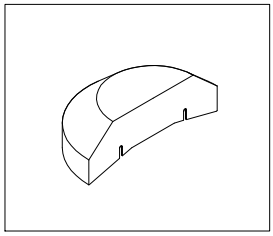

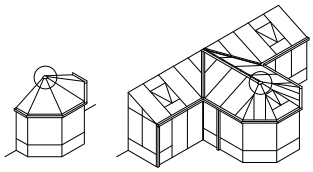

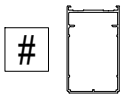

: min. 5 / max. 7

071.6856.XX

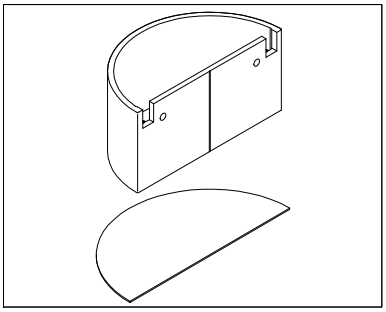

+

071.6859.PA

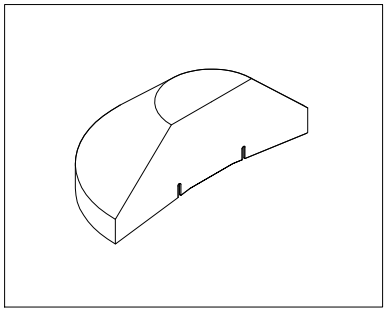

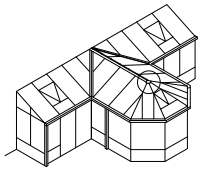

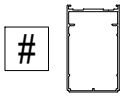

: min. 8 / max. 12

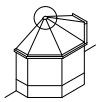

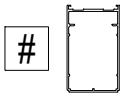

: min. 8 / max. 13

071.6990.XX

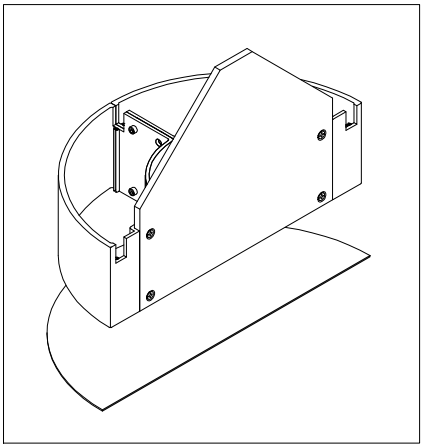

+

071.6992.PA

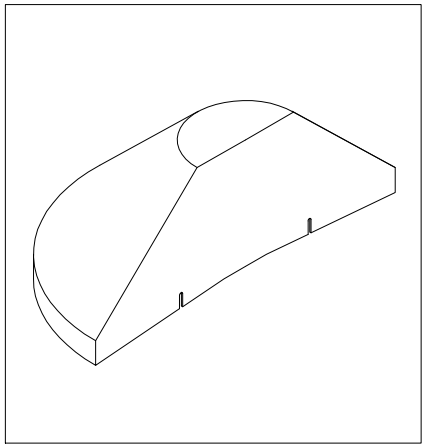

D0070138

F

NOKBEVESTIGING
FIXATION DE LA FAITIERE
FIXATION OF THE RIDGE
FIRSTANSCHLUSS

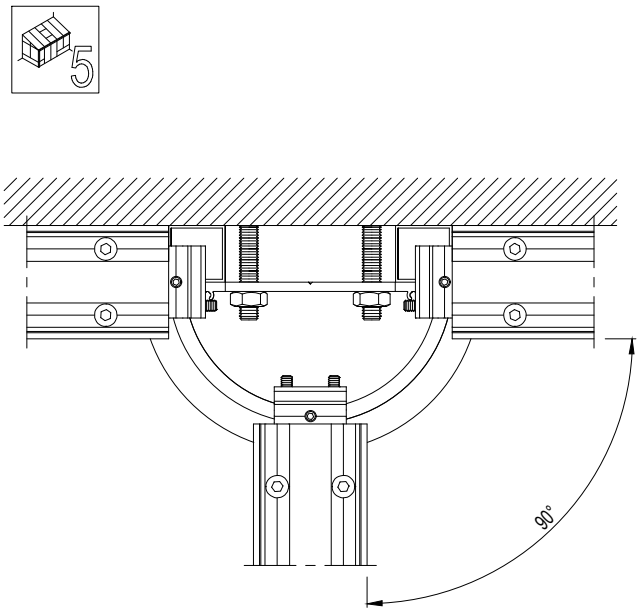

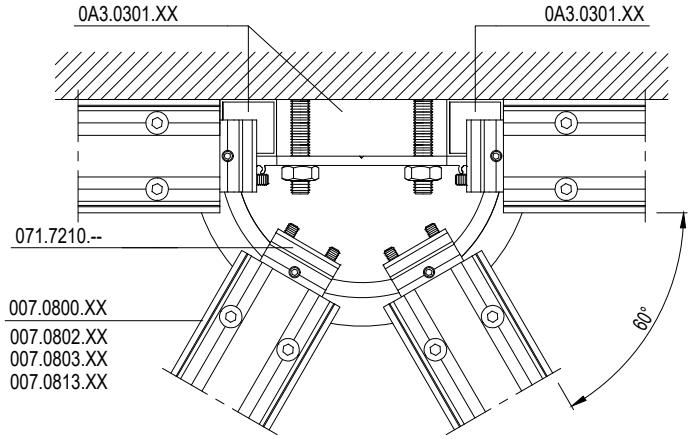

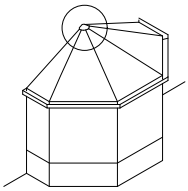

071.6851.XX

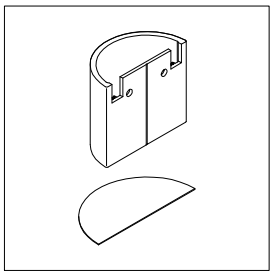

071.6854.PA

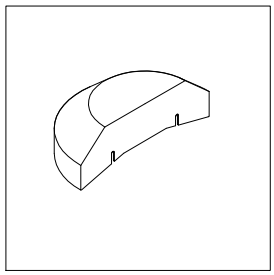

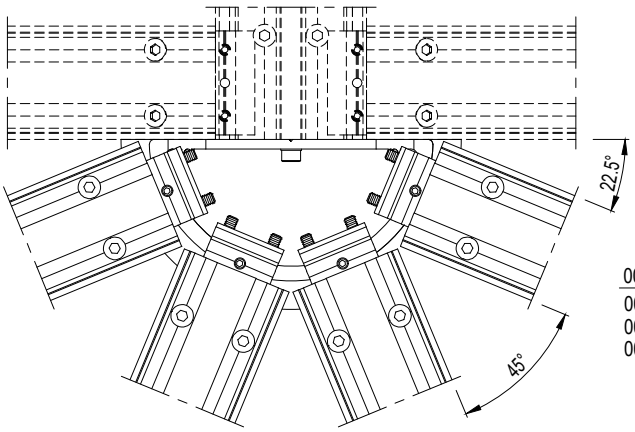

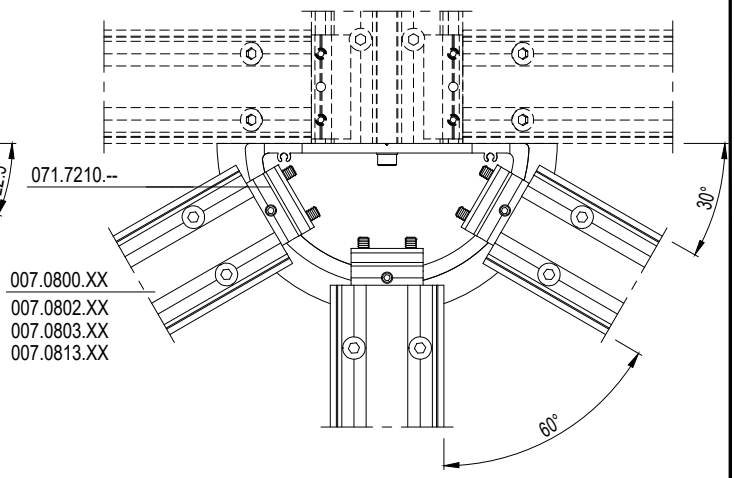

071.6851.XX

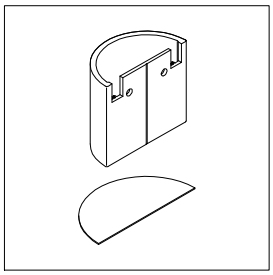

071.6854.PA

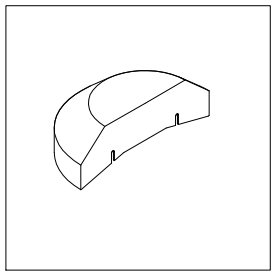

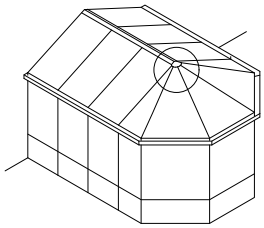

F

D0070138

NOKBEVESTIGING
FIXATION DE LA FAITIERE
FIXATION OF THE RIDGE
FIRSTANSCHLUSS

071.6859.PA

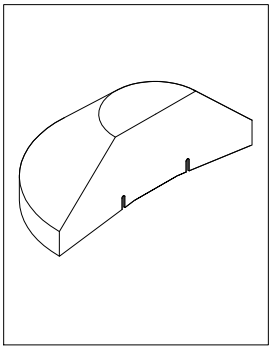

071.6856.XX

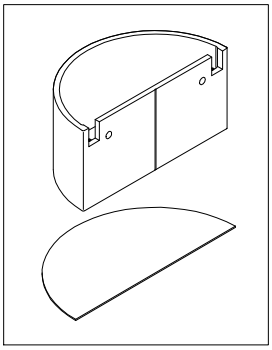

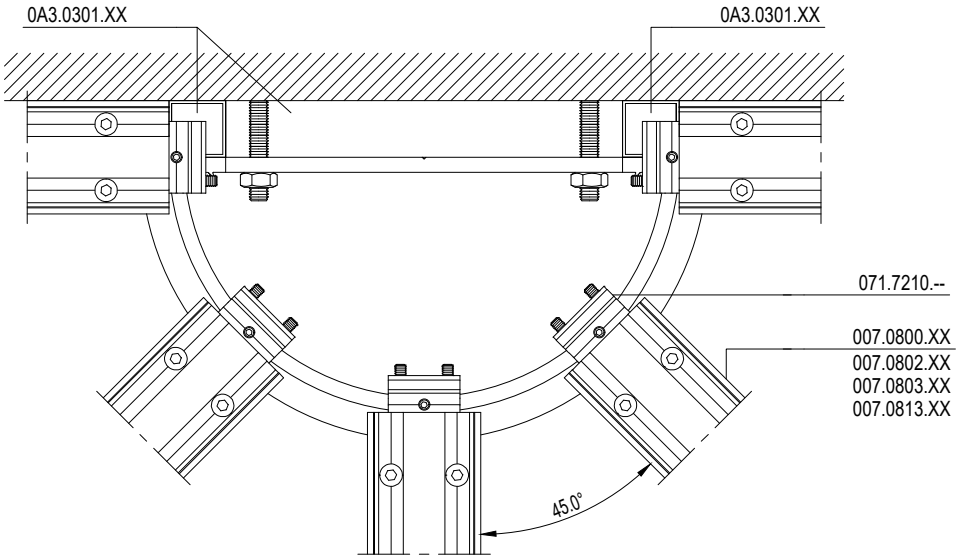

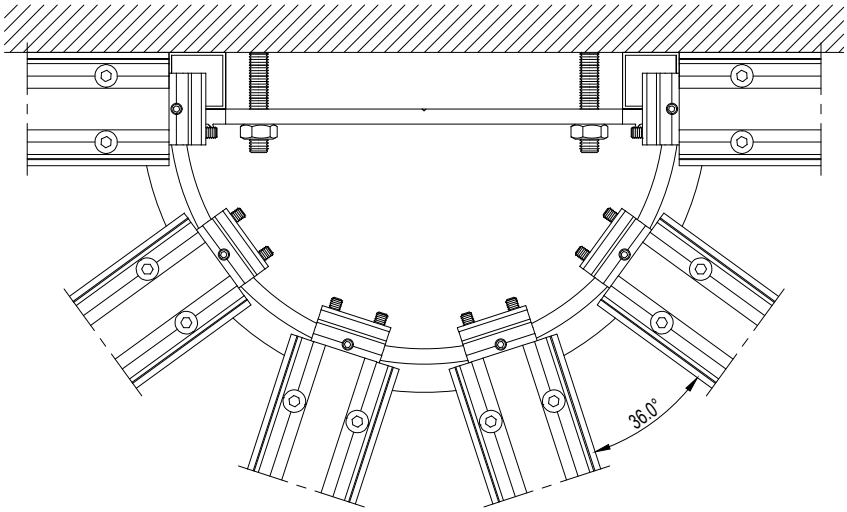

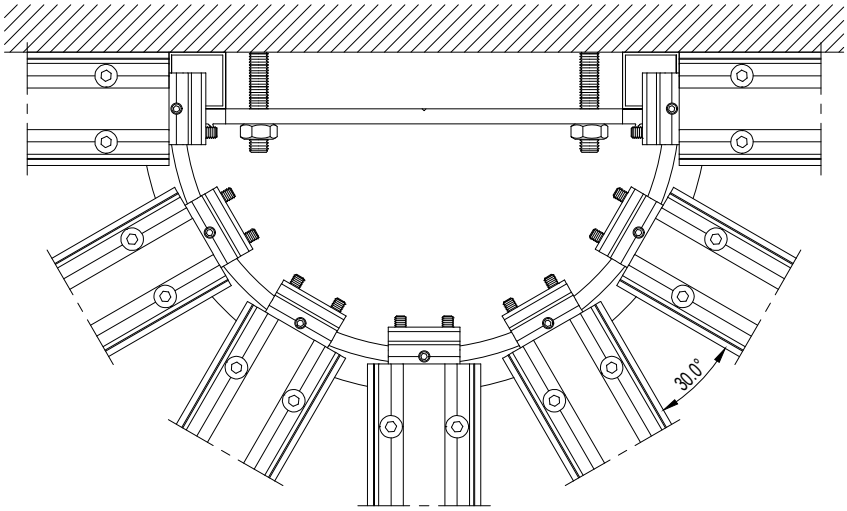

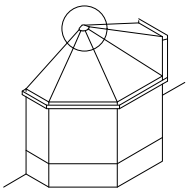

F

D0070139

071.6859.PA

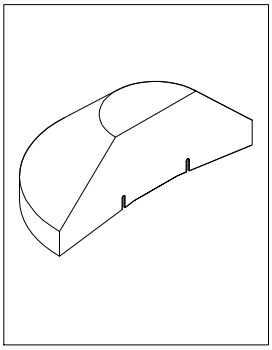

071.6856.XX

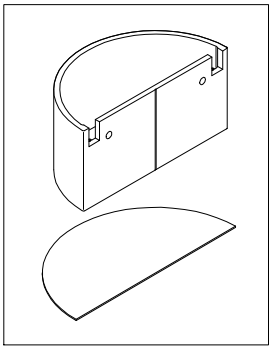

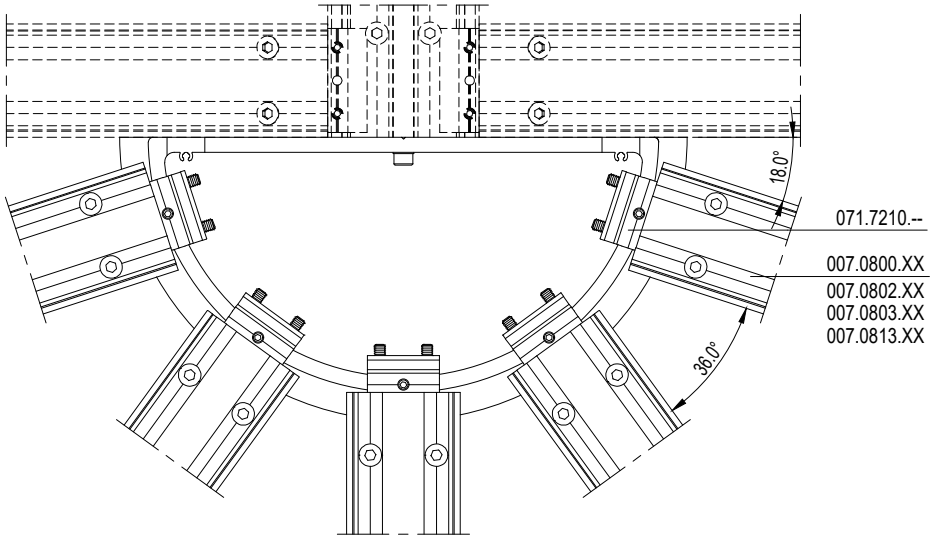

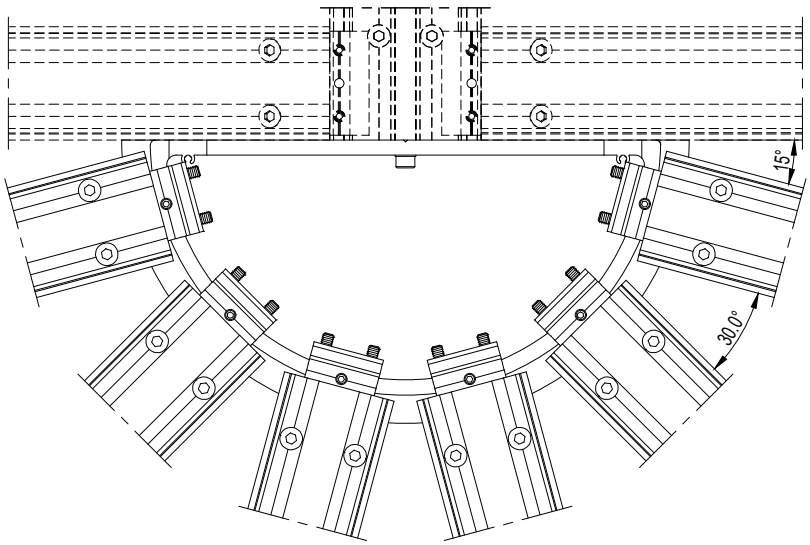

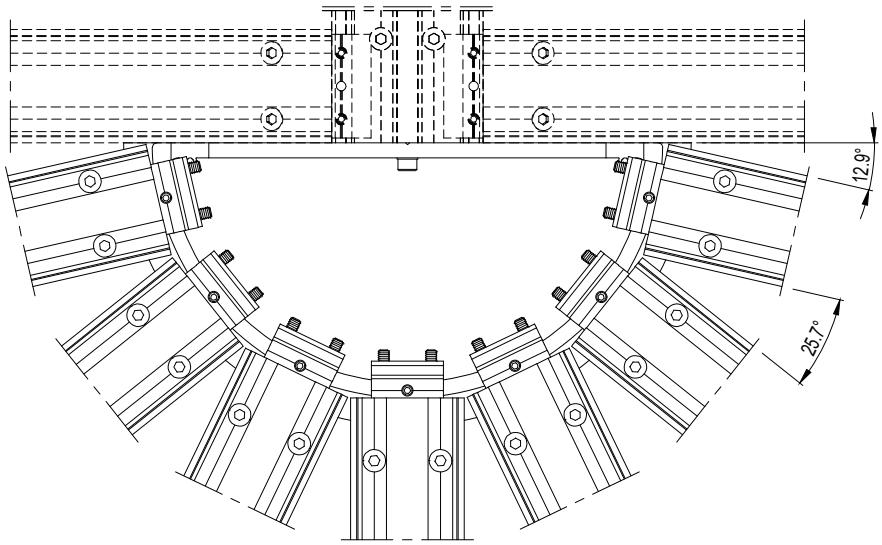

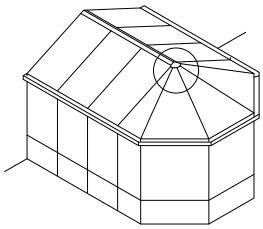

F

D0070139

NOKBEVESTIGING
FIXATION DE LA FAITIERE
FIXATION OF THE RIDGE
FIRSTANSCHLUSS

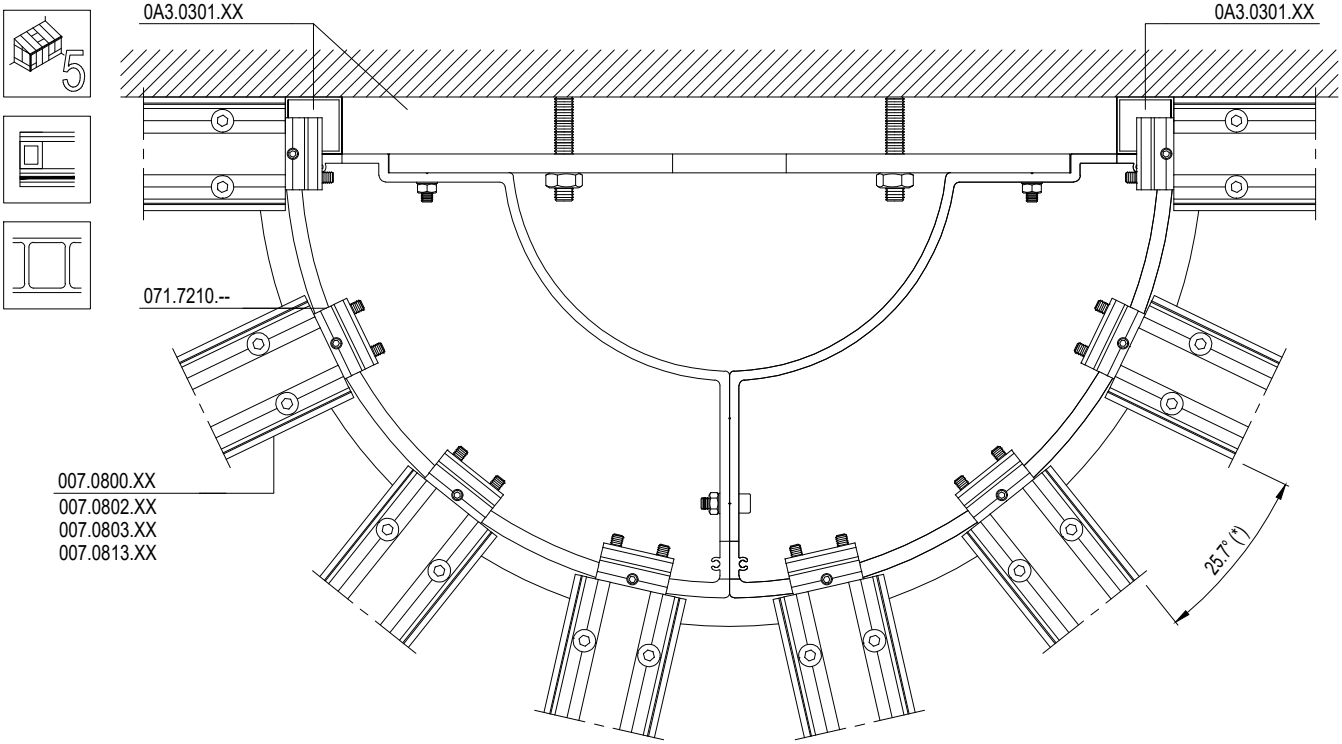

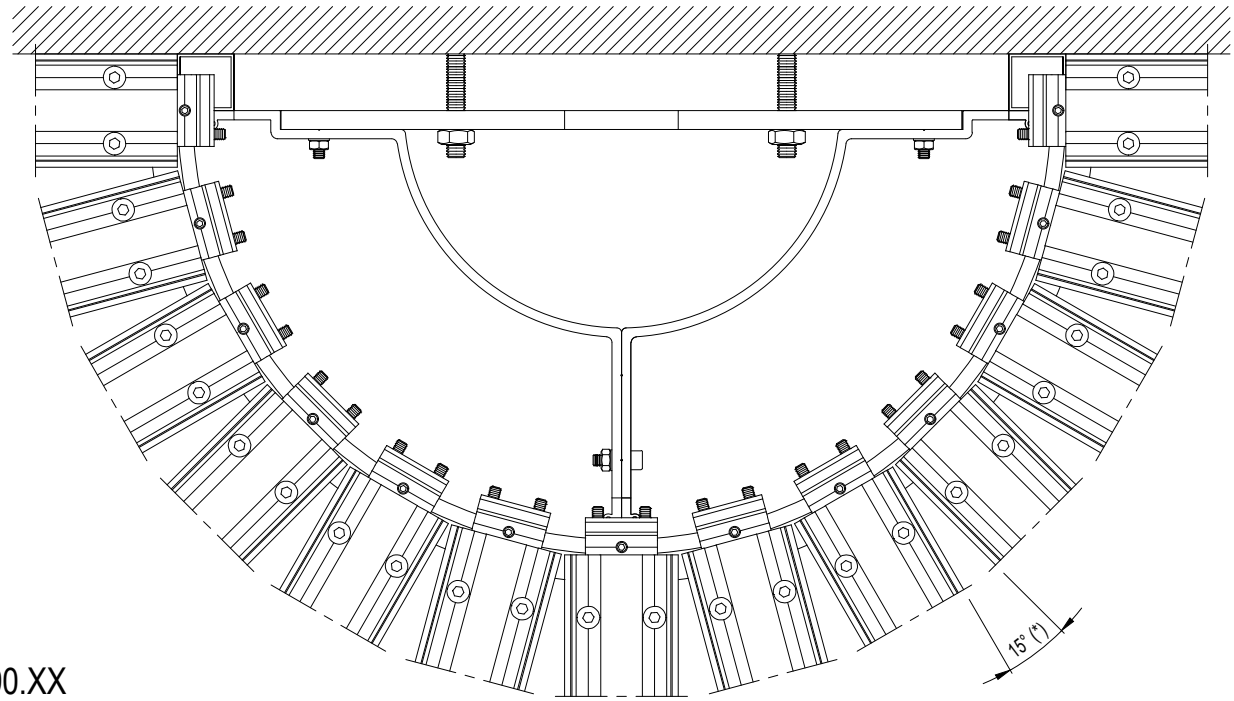

071.6990.XX

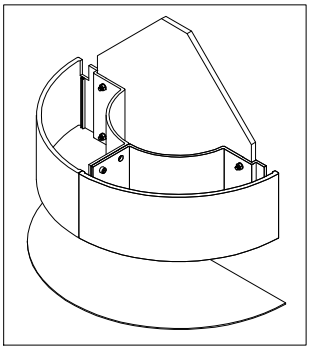

071.6992.PA

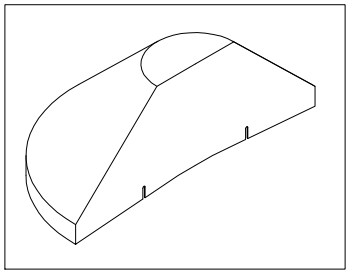

n	(*)
8	25.7°
9	22.5°
10	20°
11	18°
12	16.4°
13	15°

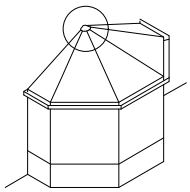

D0070140

F

NOKBEVESTIGING
FIXATION DE LA FAITIERE
FIXATION OF THE RIDGE
FIRSTANSCHLUSS

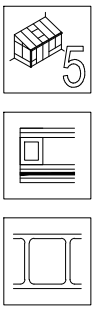

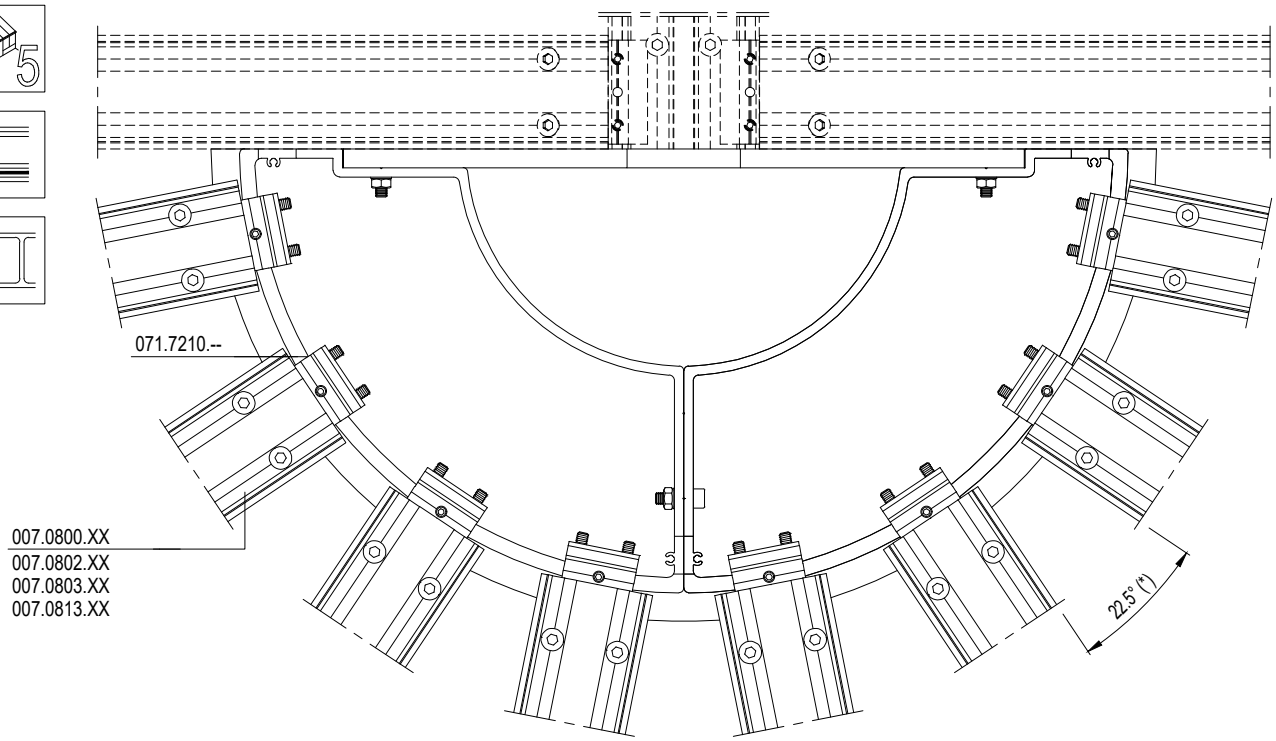

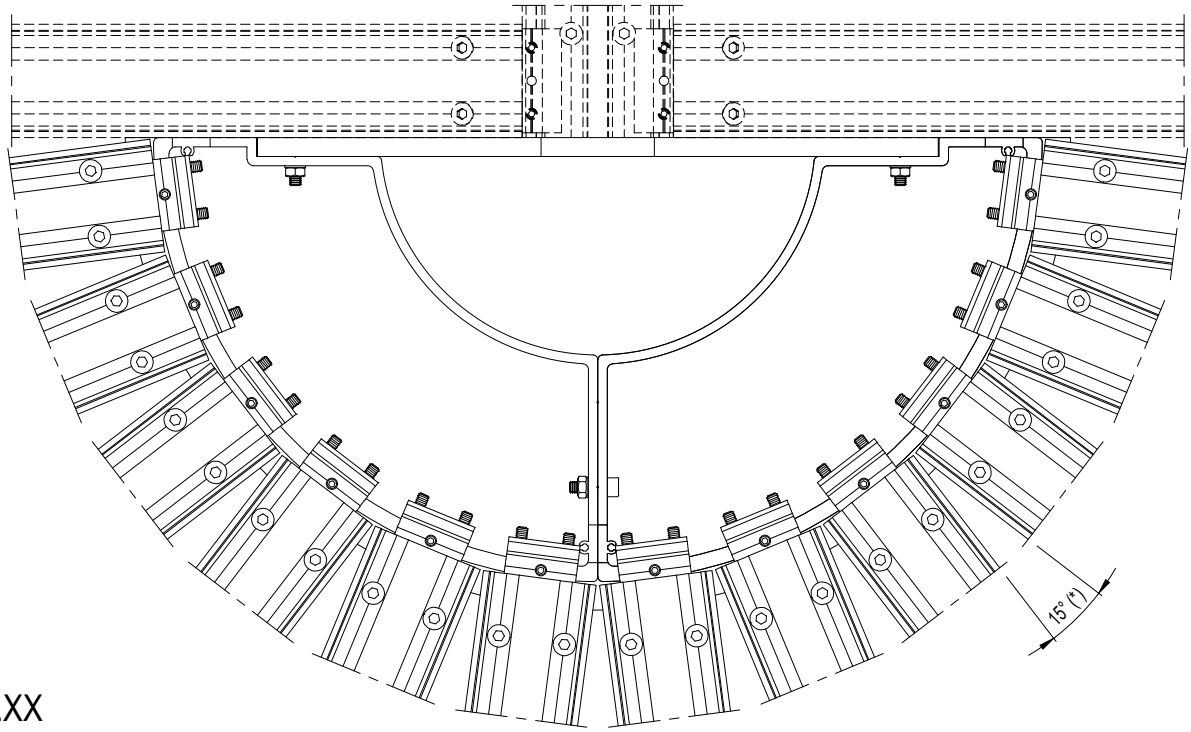

071.6990.XX

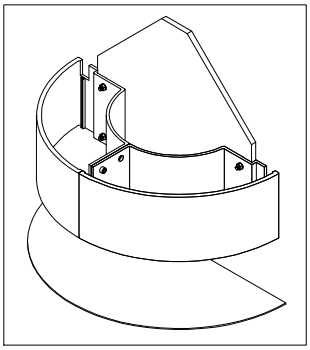

071.6992.PA

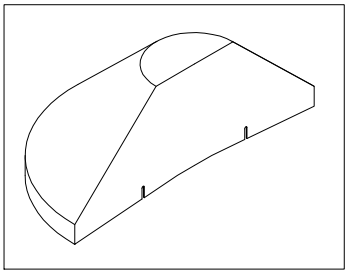

n	(*)
8	22.5°
9	20°
10	18°
11	16.4°
12	15°

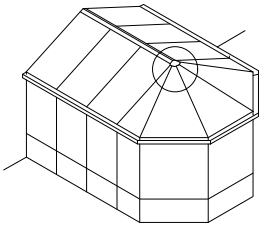

F

D0070140

NOKBEVESTIGING
FIXATION DE LA FAITIERE
FIXATION OF THE RIDGE
FIRSTANSCHLUSS

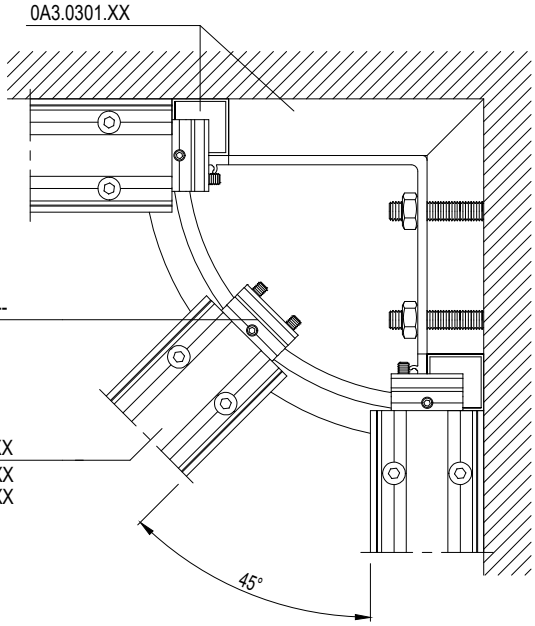

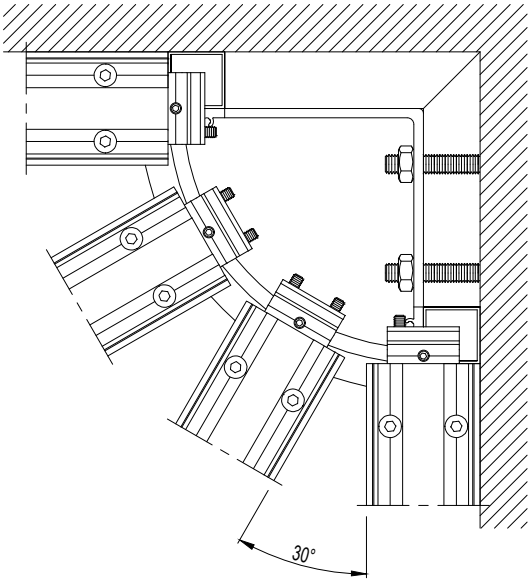

071.6861.XX

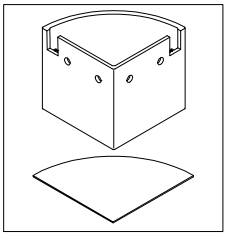

071.6864.PA

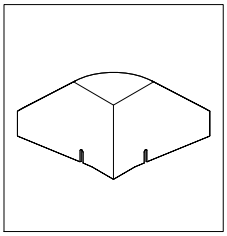

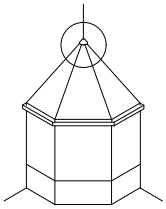

071.6983.PA

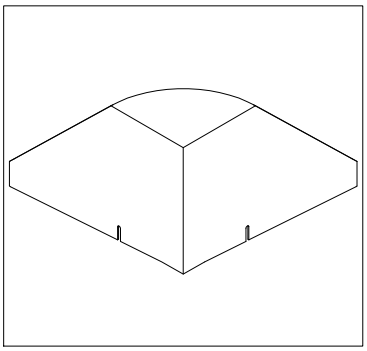

071.6980.XX

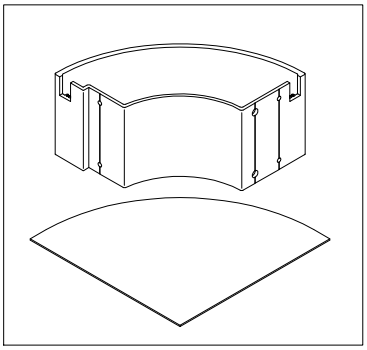

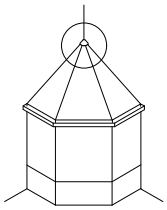

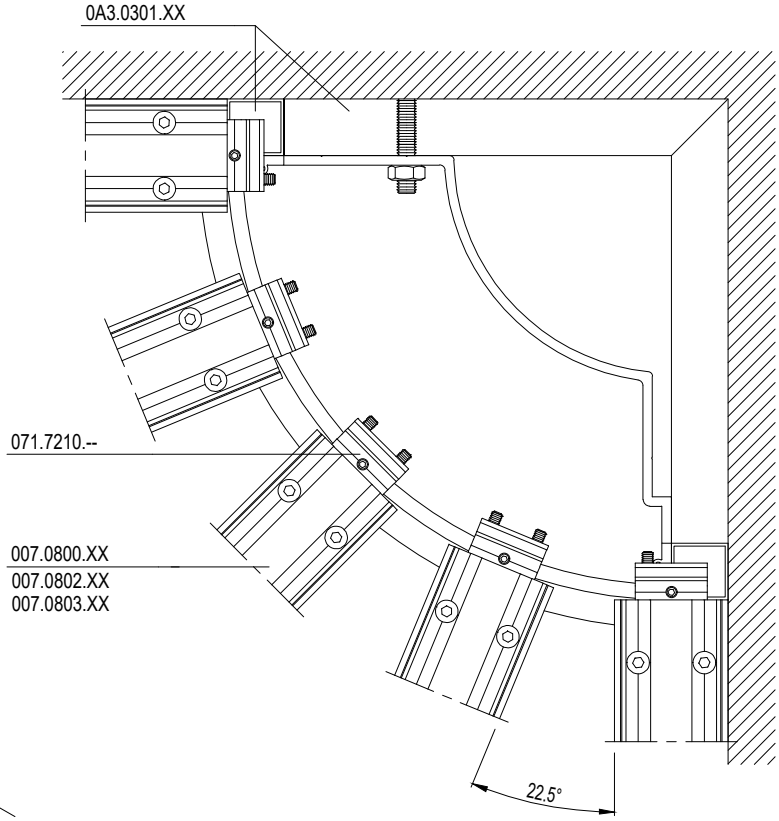

D0070141

F

071.6983.PA

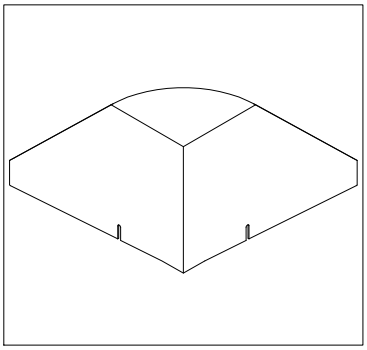

071.6980.XX

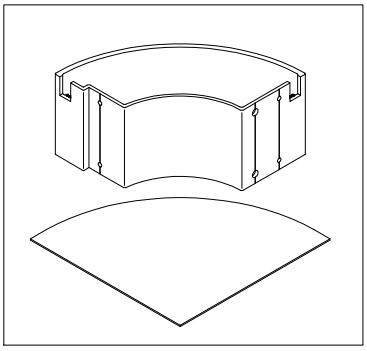

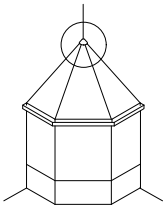

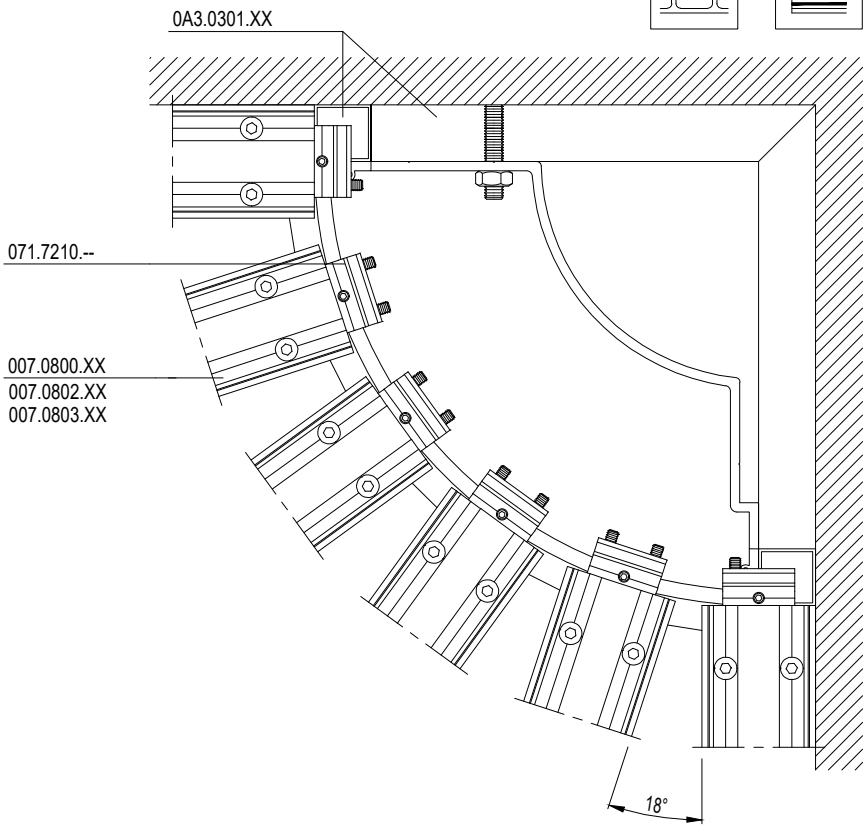

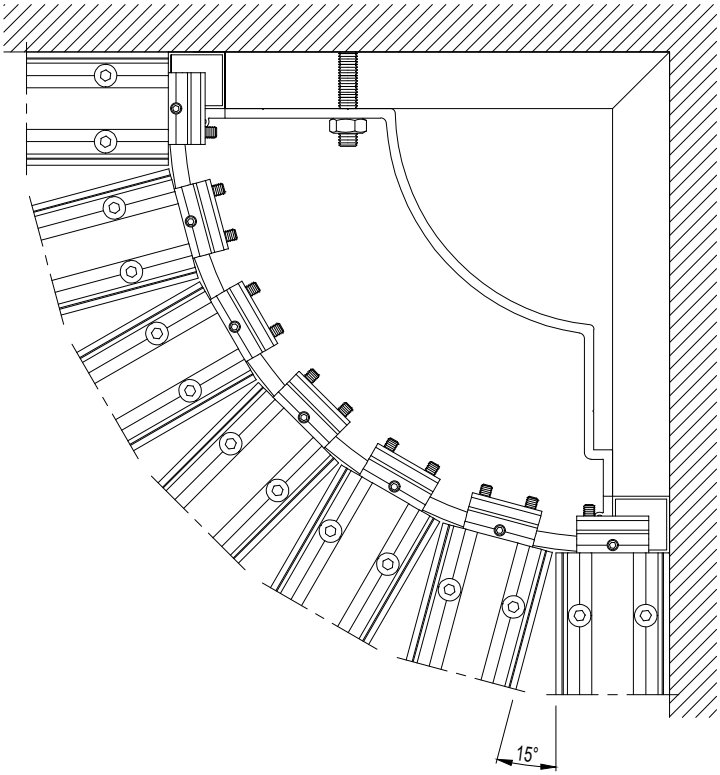

D0070141

F

NOKBEVESTIGING
FIXATION DE LA FAITIERE
FIXATION OF THE RIDGE
FIRSTANSCHLUSS

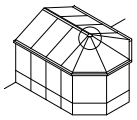

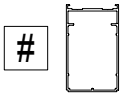

: min. 3 / max. 4

071.6851.XX

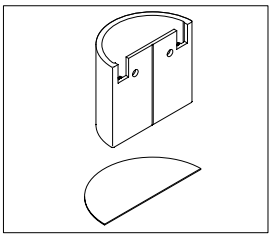

+

071.6854.PA

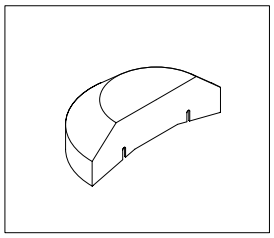

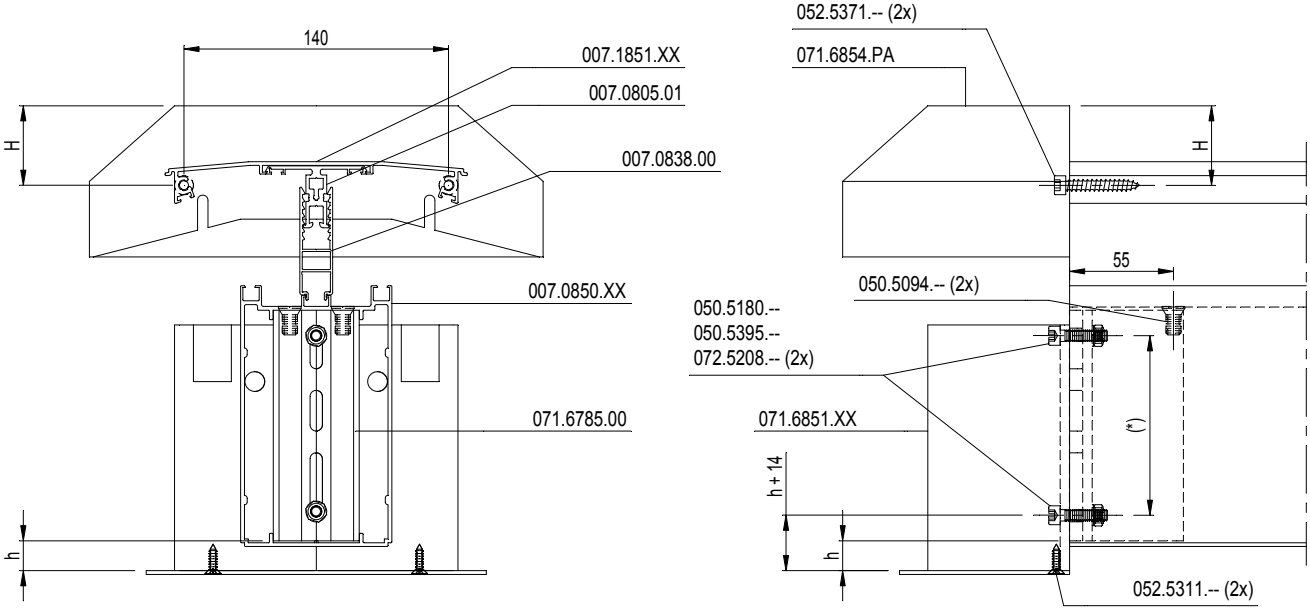

071.6851.XX	h
α : 5°	1 mm
α : 8°	3 mm
α : 10°	4.5 mm
α : 13°	6.5 mm
α : 15°	8 mm
α : 18°	10 mm
α : 20°	12 mm
α : 23°	14 mm
α : 25°	16 mm
α : 28°	18.5 mm
α : 30°	20 mm
α : 33°	23 mm
α : 35°	25 mm
α : 38°	28 mm
α : 40°	30.5 mm
α : 43°	34 mm
α : 45°	36.5 mm

071.6854.PA	H
α : 5°	63 mm
α : 10°	58 mm
α : 15°	52 mm
α : 20°	51 mm
α : 25°	46 mm
α : 30°	40 mm
α : 35°	32mm
α : 40°	26 mm
α : 45°	19 mm

(*) Afhankelijk van de dakhelling α
(*) Dépendant de la pente α
(*) Depending on roof slope α
(*) Abhänging von der Dachneigung α

F

D0041280

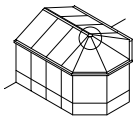

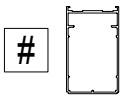

: min. 5 / max. 7

071.6856.XX

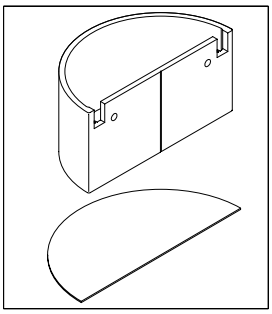

+

071.6859.PA

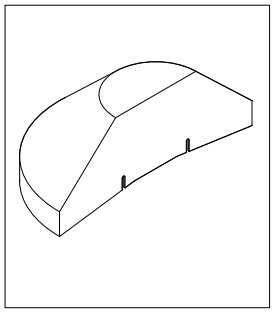

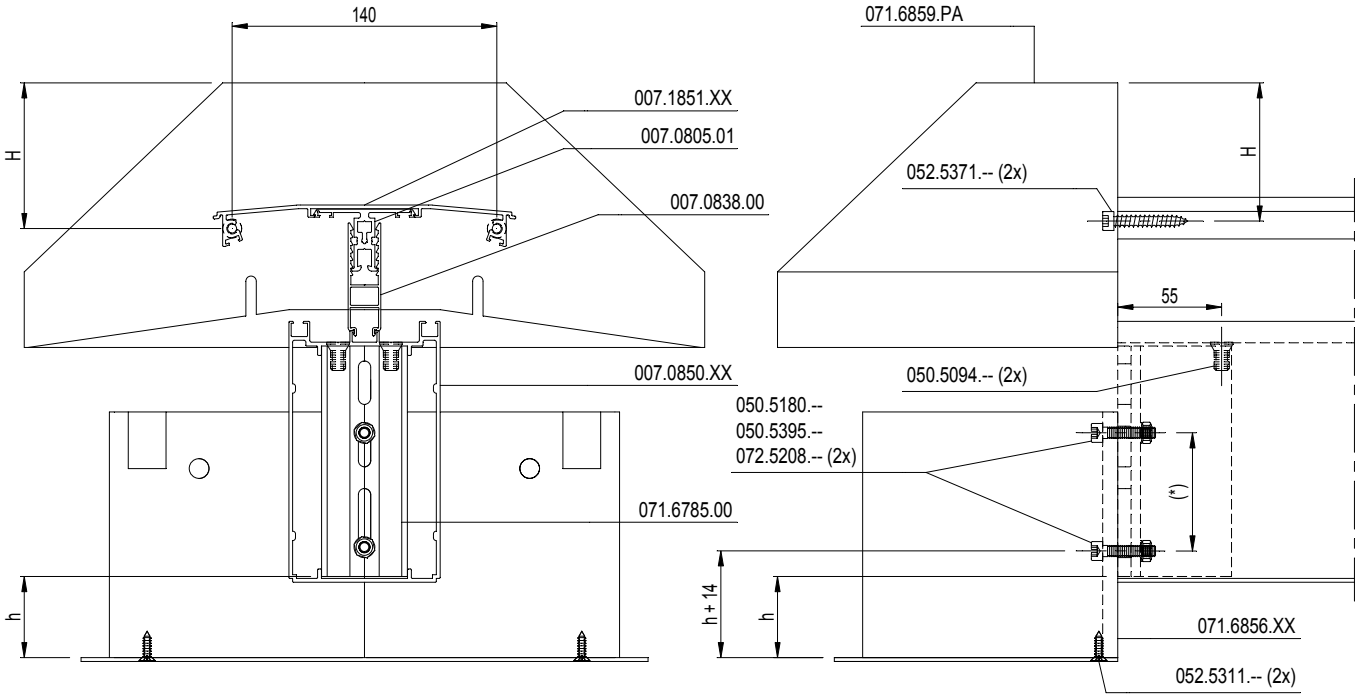

071.6856.XX	h
α : 5°	6 mm
α : 8°	11 mm
α : 10°	14.5 mm
α : 13°	20 mm
α : 15°	23.5 mm
α : 18°	29 mm
α : 20°	33 mm
α : 23°	39 mm
α : 25°	43 mm
α : 28°	49.5 mm
α : 30°	54 mm
α : 33°	61 mm
α : 35°	66 mm
α : 38°	74 mm
α : 40°	79.5 mm
α : 43°	88.5 mm
α : 45°	95 mm

071.6859.PA	H
α : 5°	117 mm
α : 10°	107 mm
α : 15°	96 mm
α : 20°	85 mm
α : 25°	76 mm
α : 30°	64 mm
α : 35°	49 mm
α : 40°	34 mm
α : 45°	17 mm

(*) Afhankelijk van de dakhelling α
(*) Dépendant de la pente α
(*) Depending on roof slope α
(*) Abhänging von der Dachneigung α

F

D0041280

NOKBEVESTIGING
FIXATION DE LA FAITIERE
FIXATION OF THE RIDGE
FIRSTANSCHLUSS

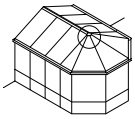

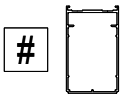

: min. 8 / max. 12

071.6990.XX

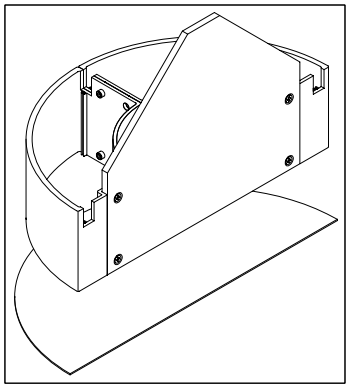

+

071.6992.PA

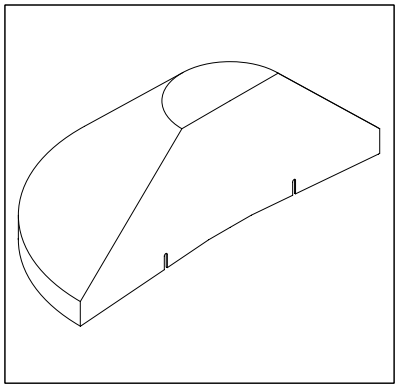

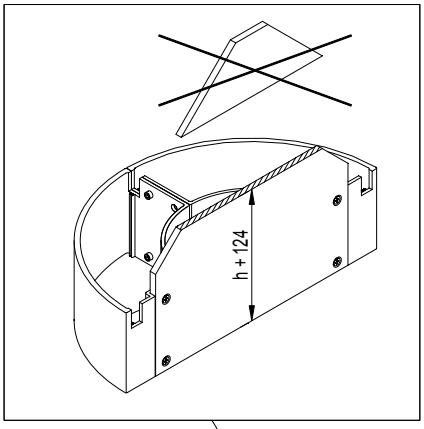

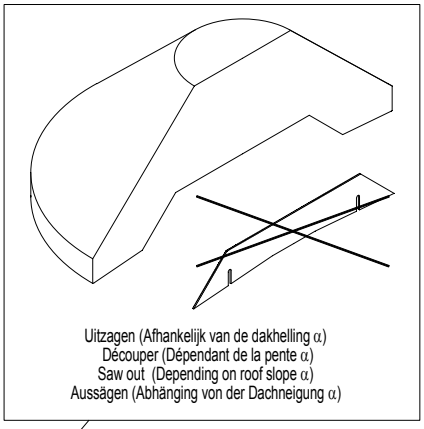

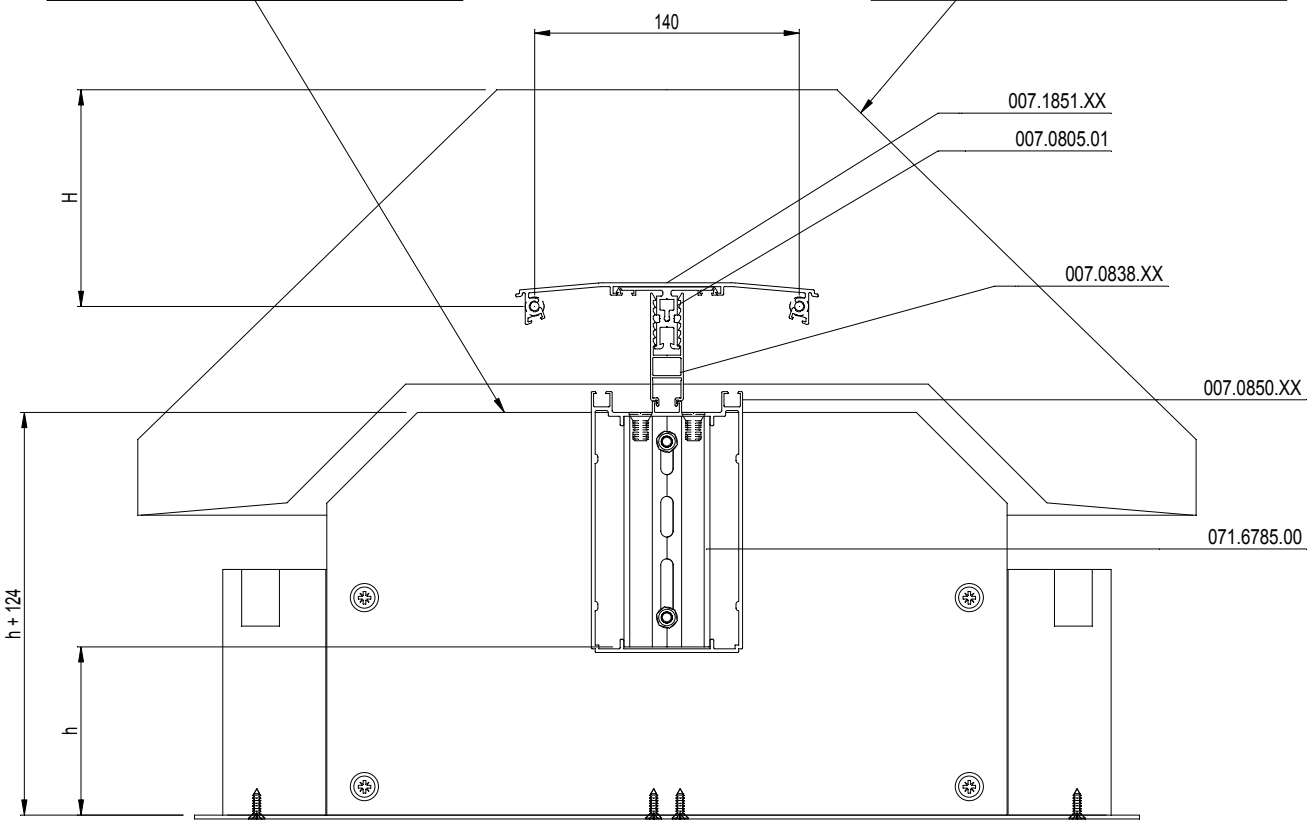

D0041281

F

NOKBEVESTIGING
FIXATION DE LA FAITIERE
FIXATION OF THE RIDGE
FIRSTANSCHLUSS

071.6856.XX	h
α : 5°	14.5 mm
α : 8°	25 mm
α : 10°	32 mm
α : 13°	42.5 mm
α : 15°	50 mm
α : 18°	61 mm
α : 20°	69 mm
α : 23°	81 mm
α : 25°	89 mm
α : 28°	102 mm
α : 30°	111 mm
α : 33°	125 mm
α : 35°	135 mm
α : 38°	151 mm
α : 40°	162 mm
α : 43°	180.5 mm
α : 45°	194 mm

071.6859.PA	H
α : 5°	193 mm
α : 10°	174 mm
α : 15°	154 mm
α : 20°	136 mm
α : 25°	114 mm
α : 30°	91 mm
α : 35°	65 mm
α : 40°	34 mm
α : 45°	15 mm

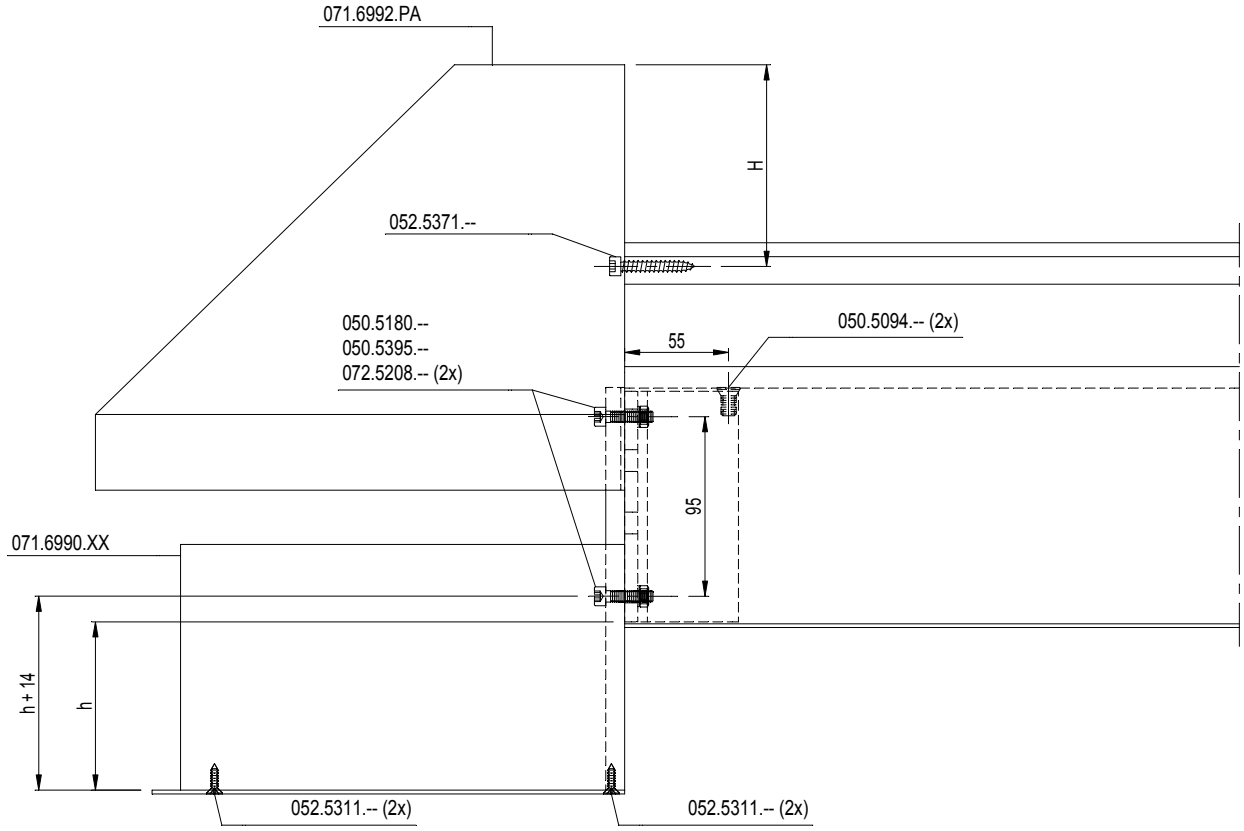

D0041281

F

NOKBEVESTIGING
FIXATION DE LA FAITIERE
FIXATION OF THE RIDGE
FIRSTANSCHLUSS

TREKSTANG NIET DOOR REYNAERS - STABILITEIT TE CONTROLEREN DOOR DE AANNEMER
TIE ROD NOT BY REYNAERS - STRUCTURAL STABILITY TO BE CHECKED BY CONTRACTOR
ZUGSTANGE NICHT BEI REYNAERS - STRUKTURäLE STäRKE ZU KONTROLIEREN BY DEN AUFTRAGNEHMER
TIRANT PAS PAR REYNAERS - STABILITÉ STRUCTURELLE À VÉRIFIER PAR L'ENTREPRENEUR

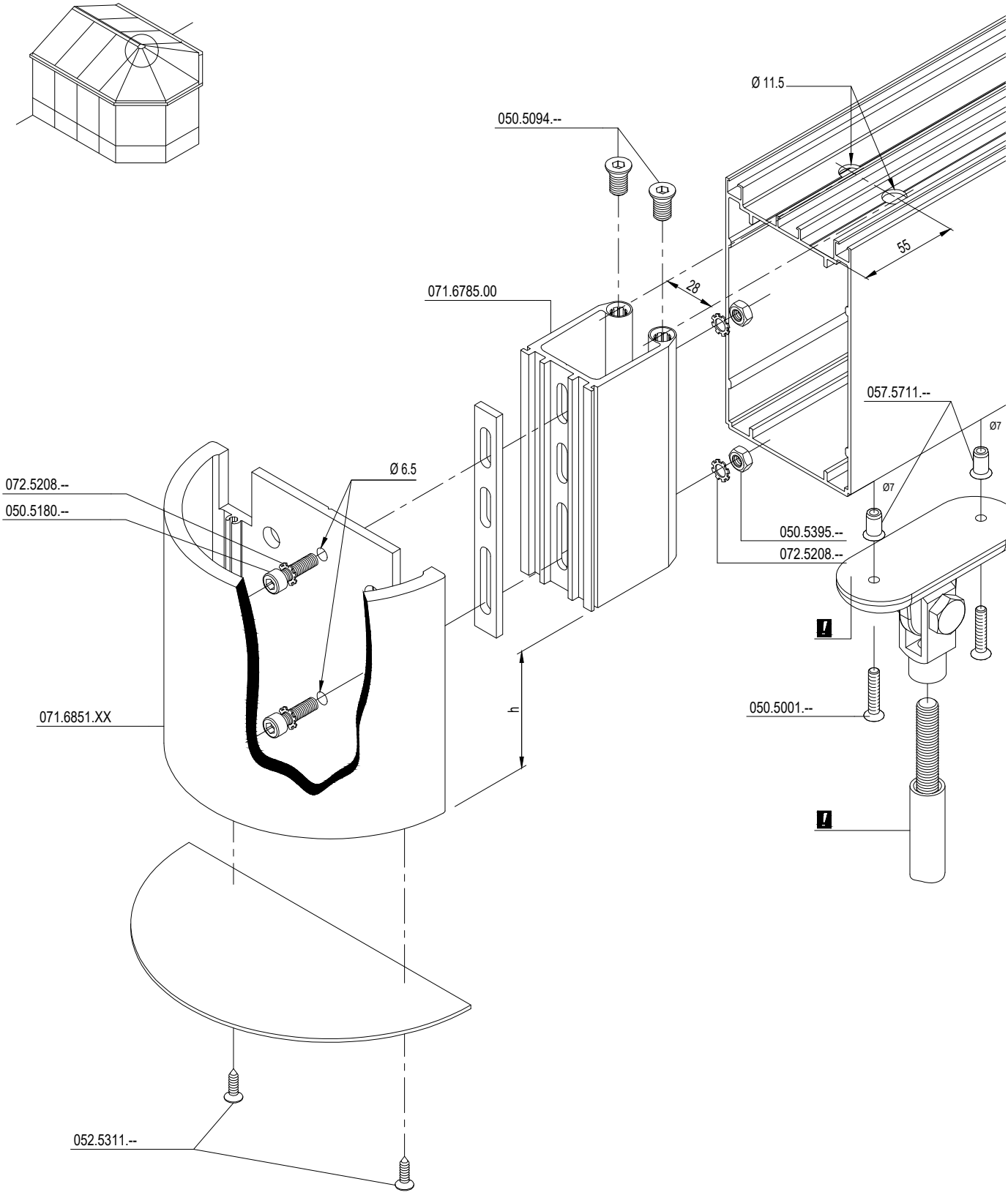

D0070142

NOKBEVESTIGING
FIXATION DE LA FAITIERE
FIXATION OF THE RIDGE
FIRSTANSCHLUSS

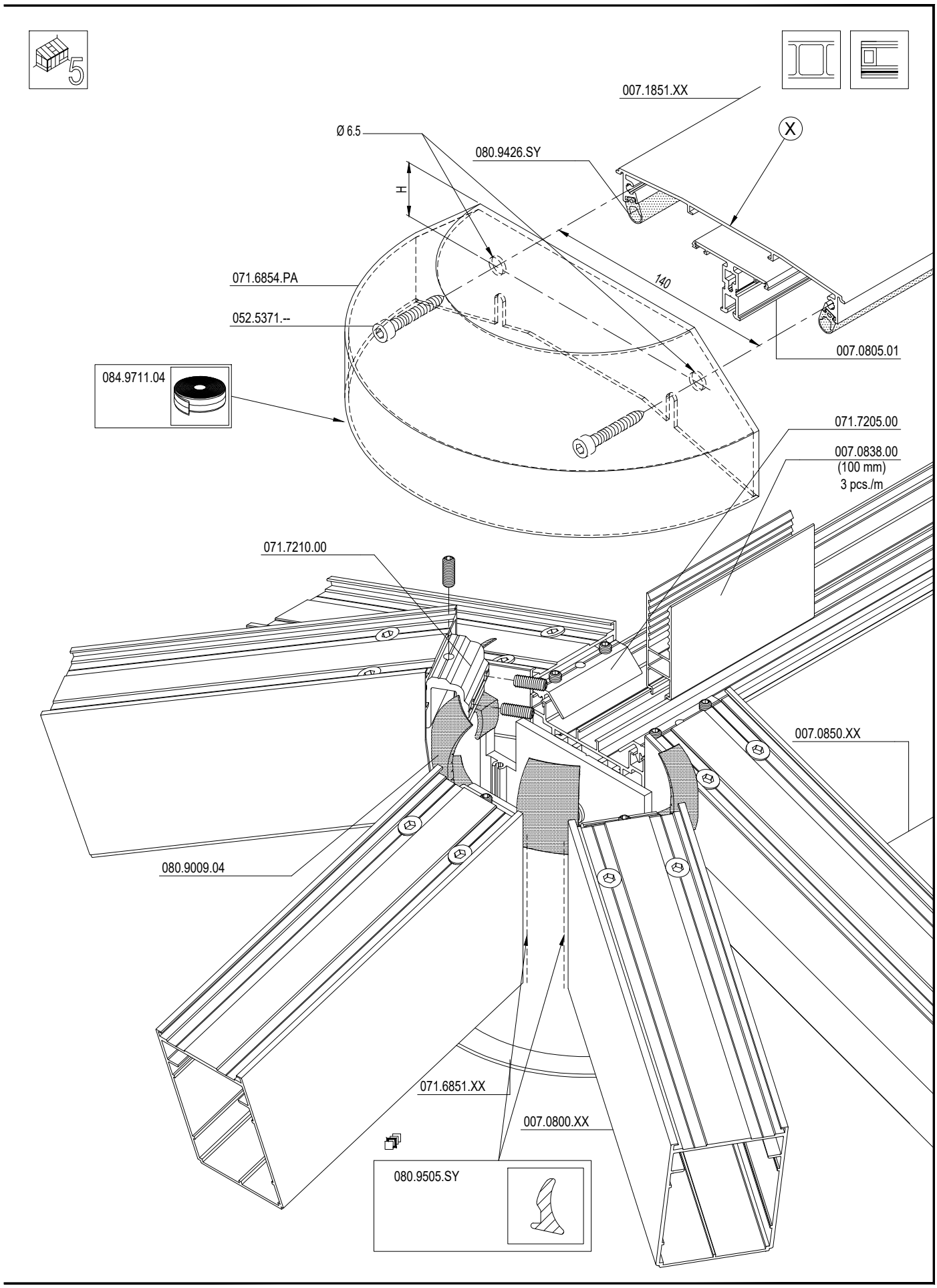

F

NOKBEVESTIGING
FIXATION DE LA FAITIERE
FIXATION OF THE RIDGE
FIRSTANSCHLUSS

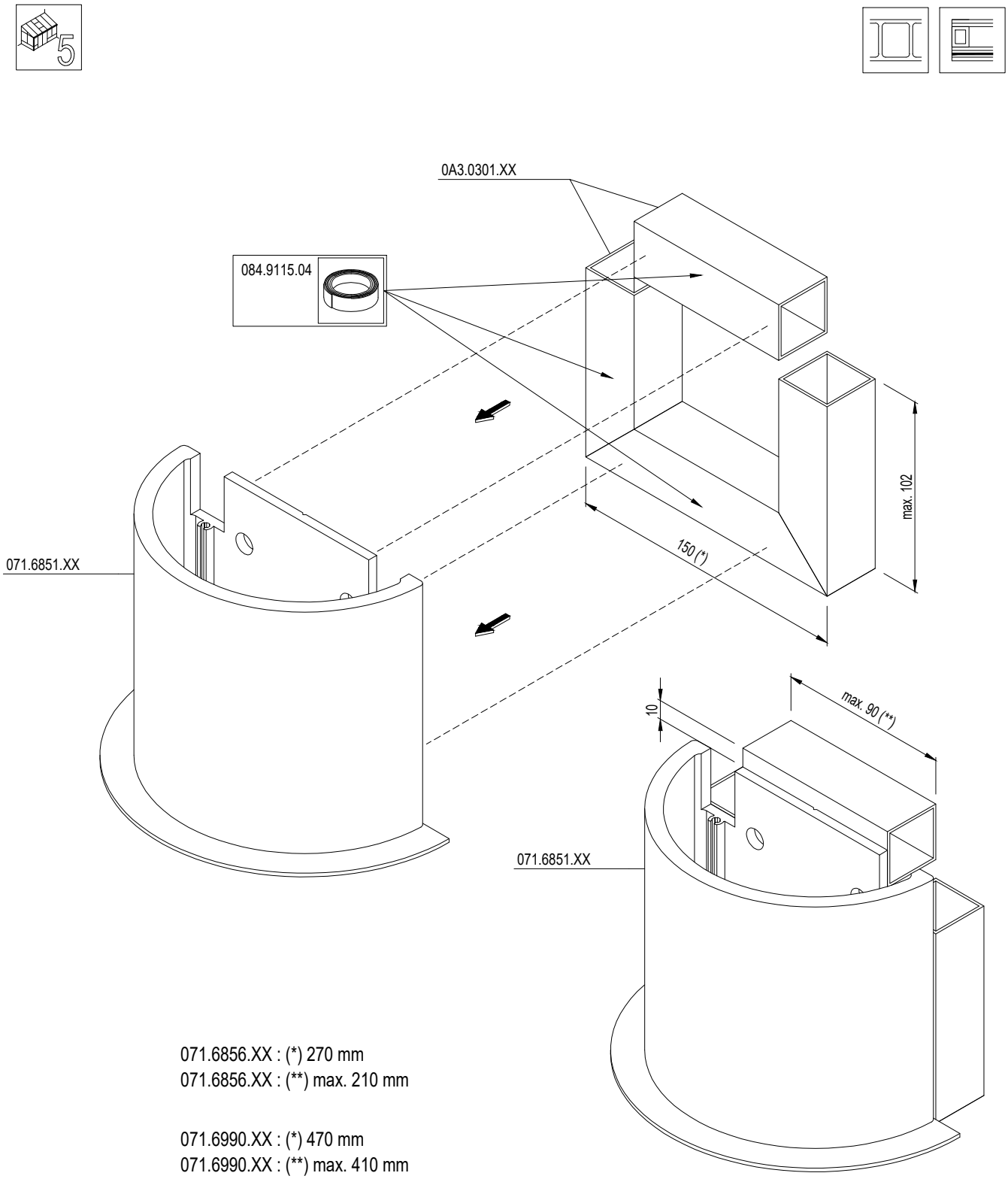

071.6856.XX : (*) 270 mm
071.6856.XX : (**) max. 210 mm

071.6990.XX : (*) 470 mm
071.6990.XX : (**) max. 410 mm

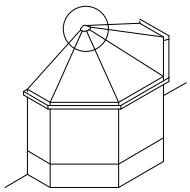

F

D0070143

NOKBEVESTIGING
FIXATION DE LA FAITIERE
FIXATION OF THE RIDGE
FIRSTANSCHLUSS

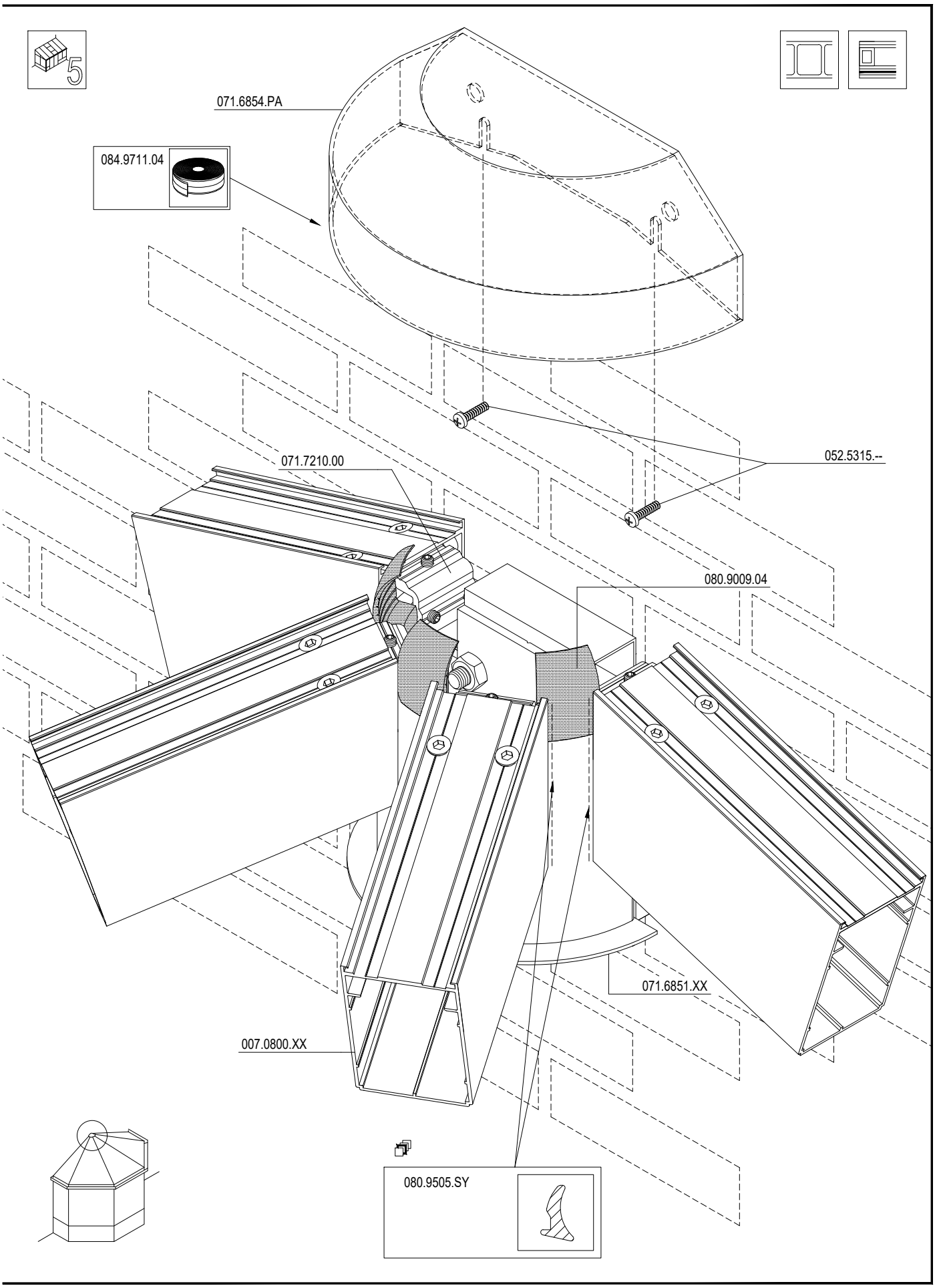

NOKBEVESTIGING
FIXATION DE LA FAITIERE
FIXATION OF THE RIDGE
FIRSTANSCHLUSS

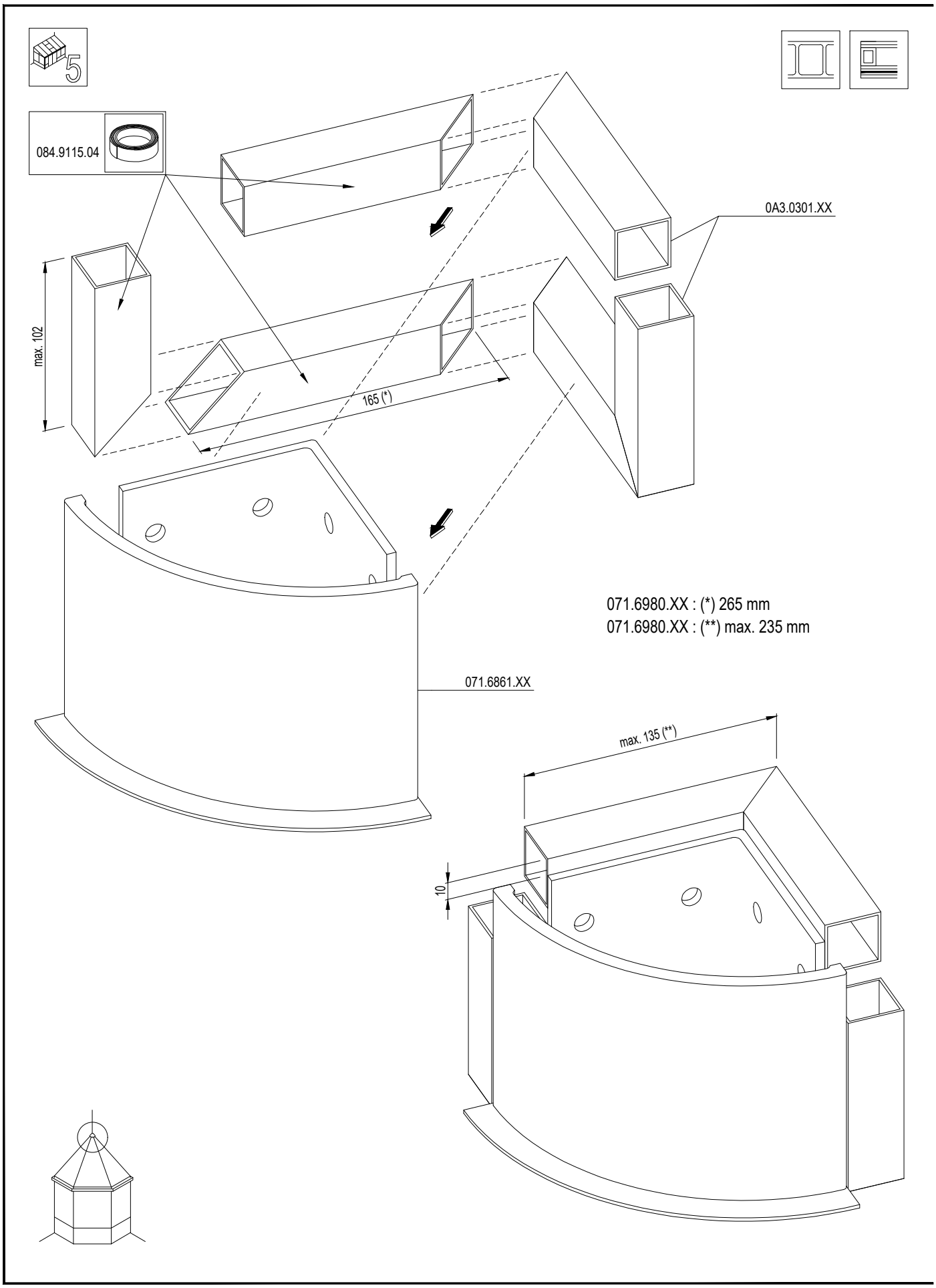

NOKBEVESTIGING
FIXATION DE LA FAITIERE
FIXATION OF THE RIDGE
FIRSTANSCHLUSS

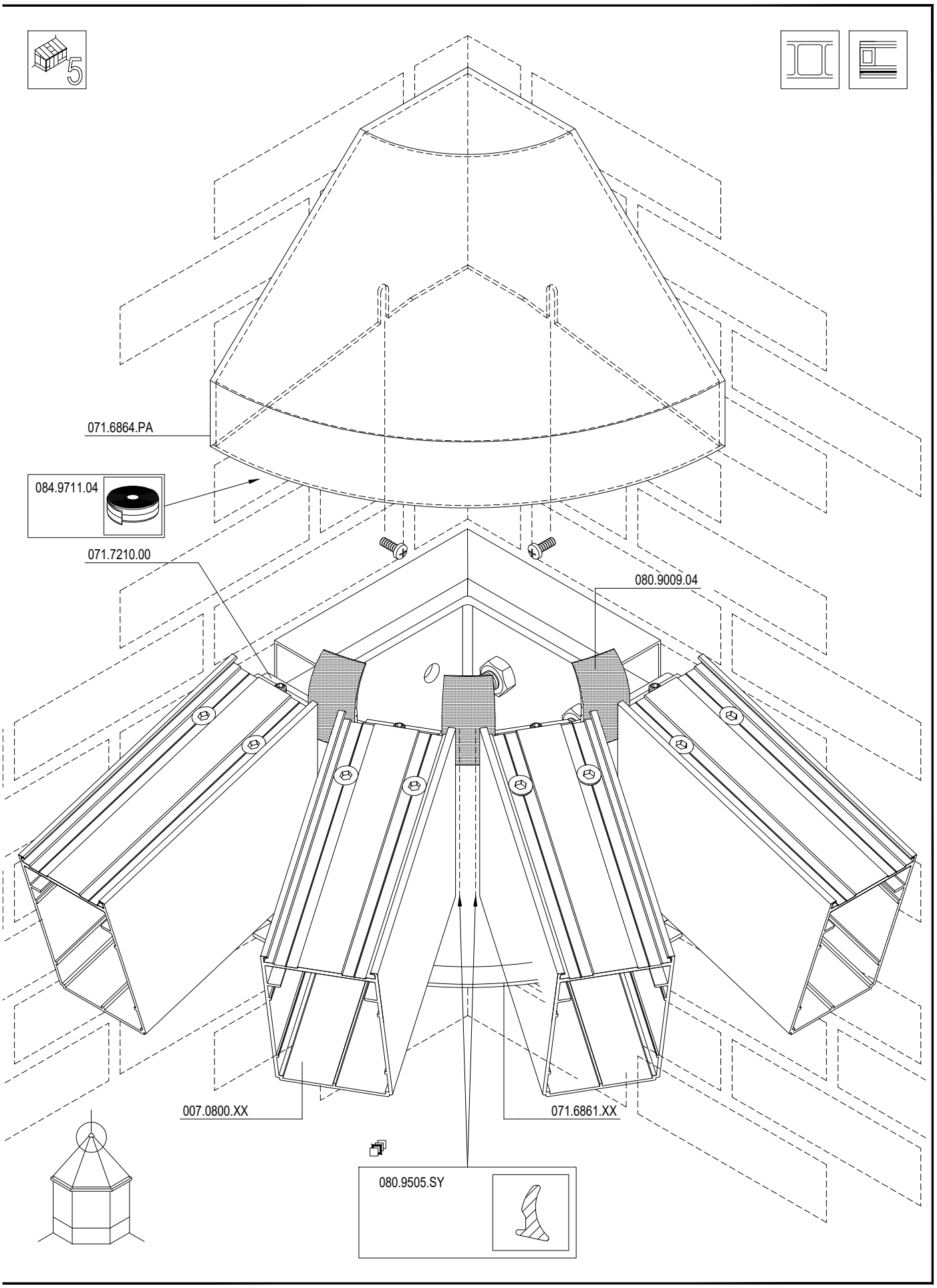

F

NOK-GOOTVERBINDING
RACCORDEMENT FAITIERE-GOUTTIERE
RIDGE-GUTTER CONNECTION
FIRST-RINNENVERBINDUNG

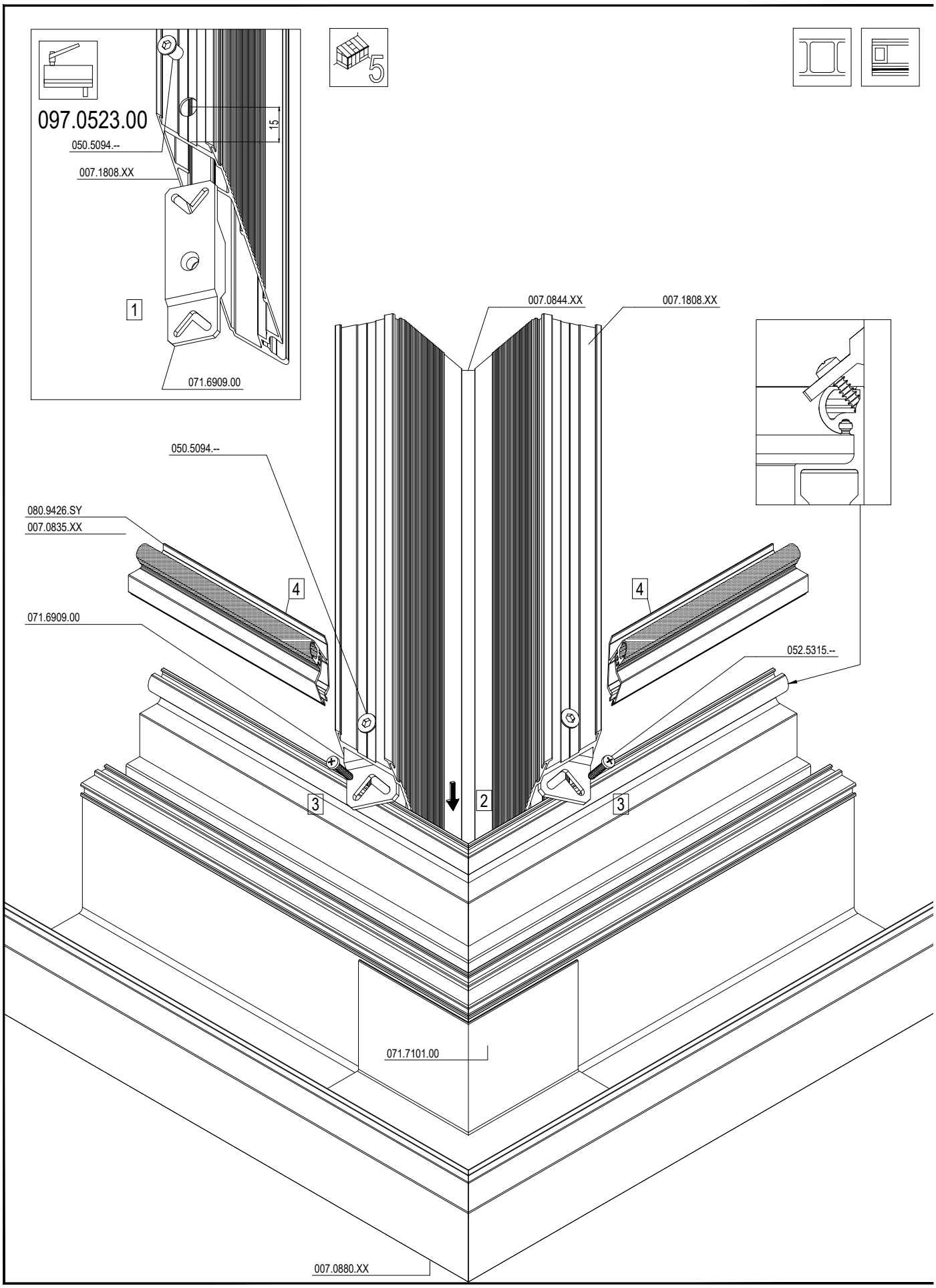

NOK-GOOTVERBINDING
RACCORDEMENT FAITIERE-GOUTTIERE
RIDGE-GUTTER CONNECTION
FIRST-RINNENVERBINDUNG

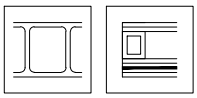

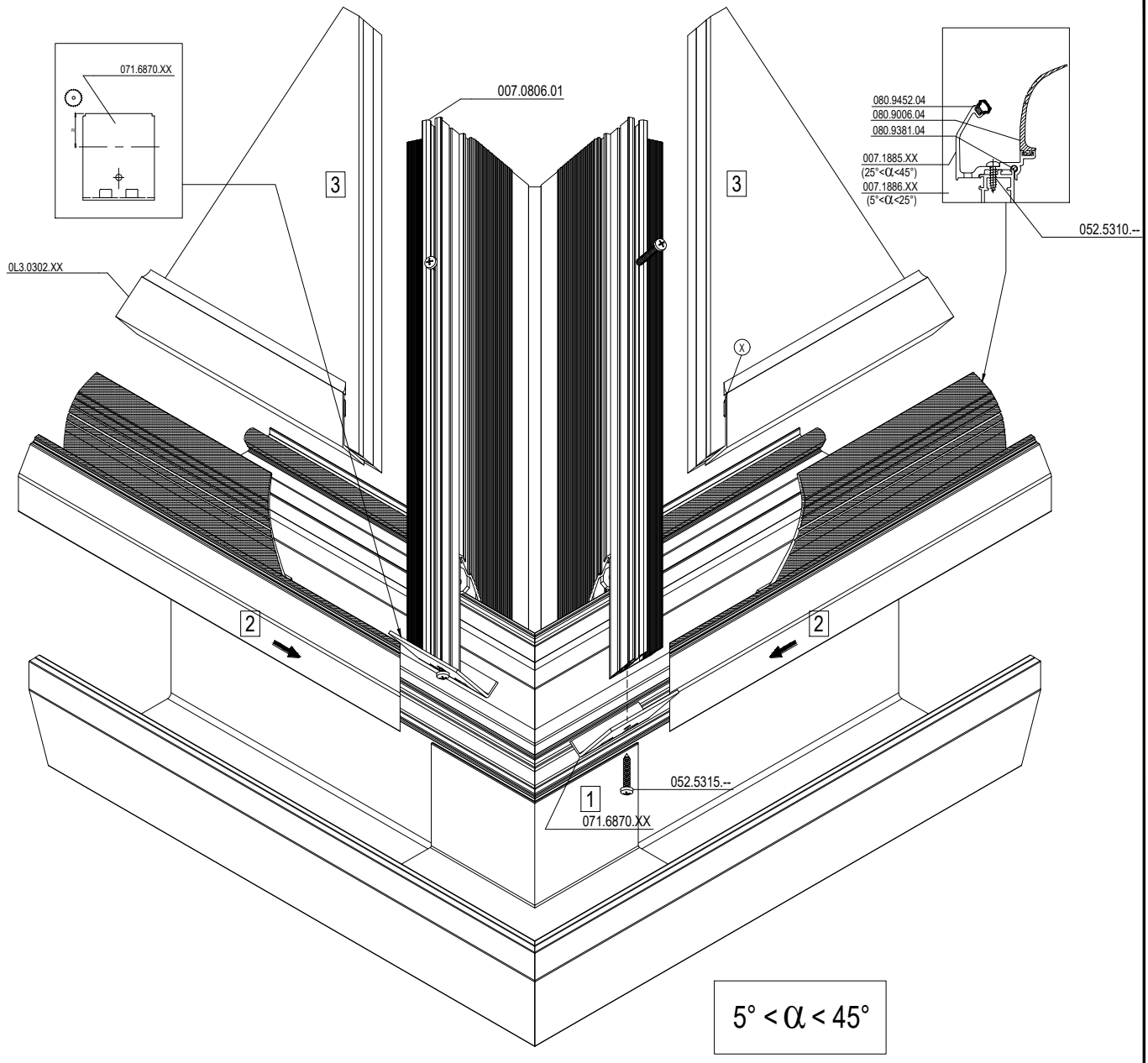

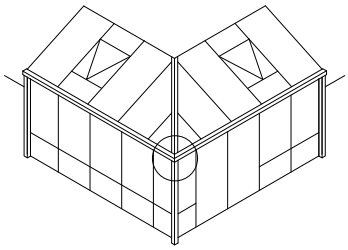

F

D2001608

NOK-GOOTVERBINDING
RACCORDEMENT FAITIERE-GOUTTIERE
RIDGE-GUTTER CONNECTION
FIRST-RINNENVERBINDUNG

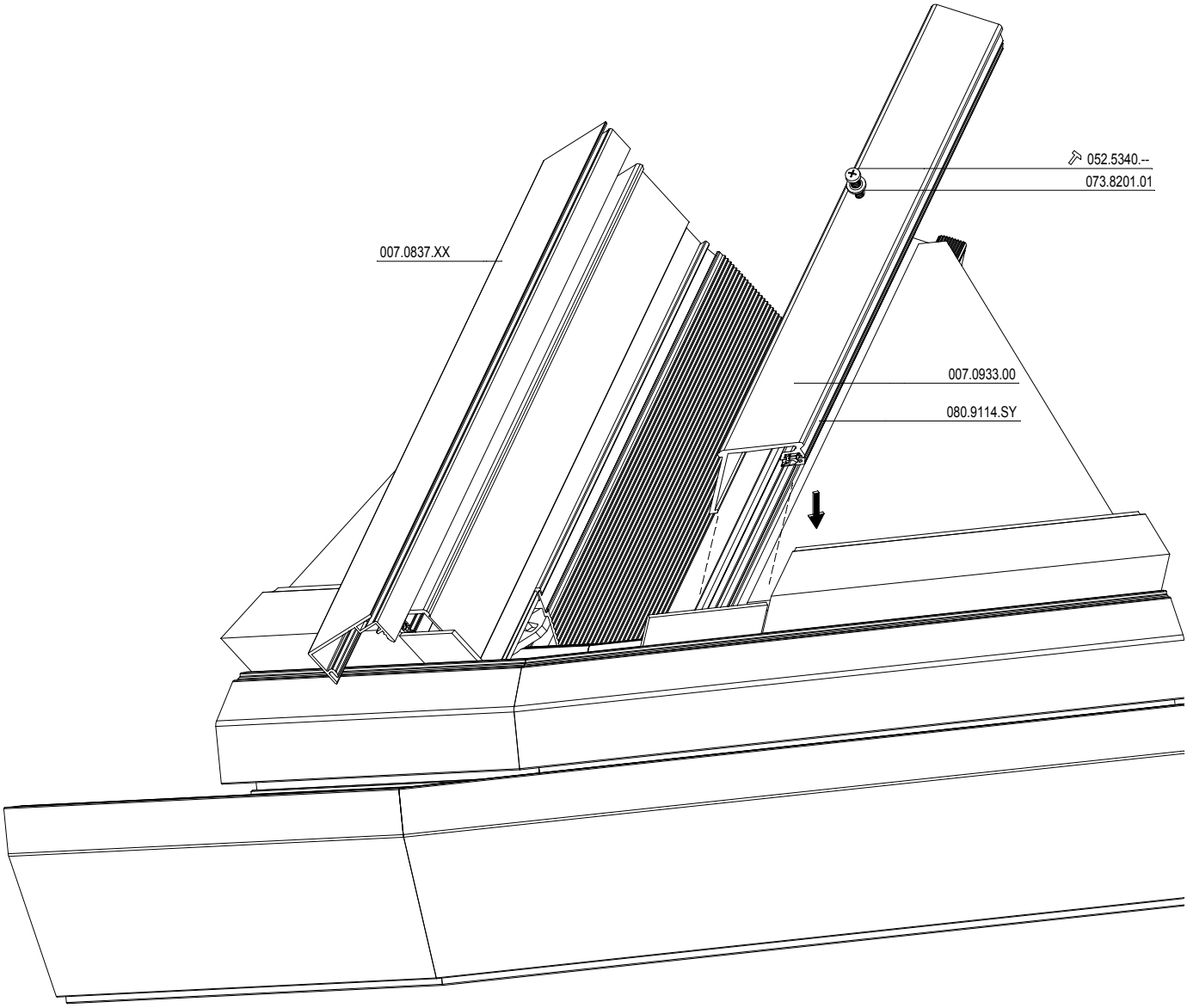

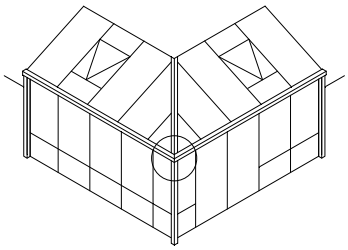

F

D2001609

NOK-GOOTVERBINDING
RACCORDEMENT FAITIERE-GOUTTIERE
RIDGE-GUTTER CONNECTION
FIRST-RINNENVERBINDUNG

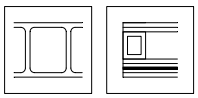

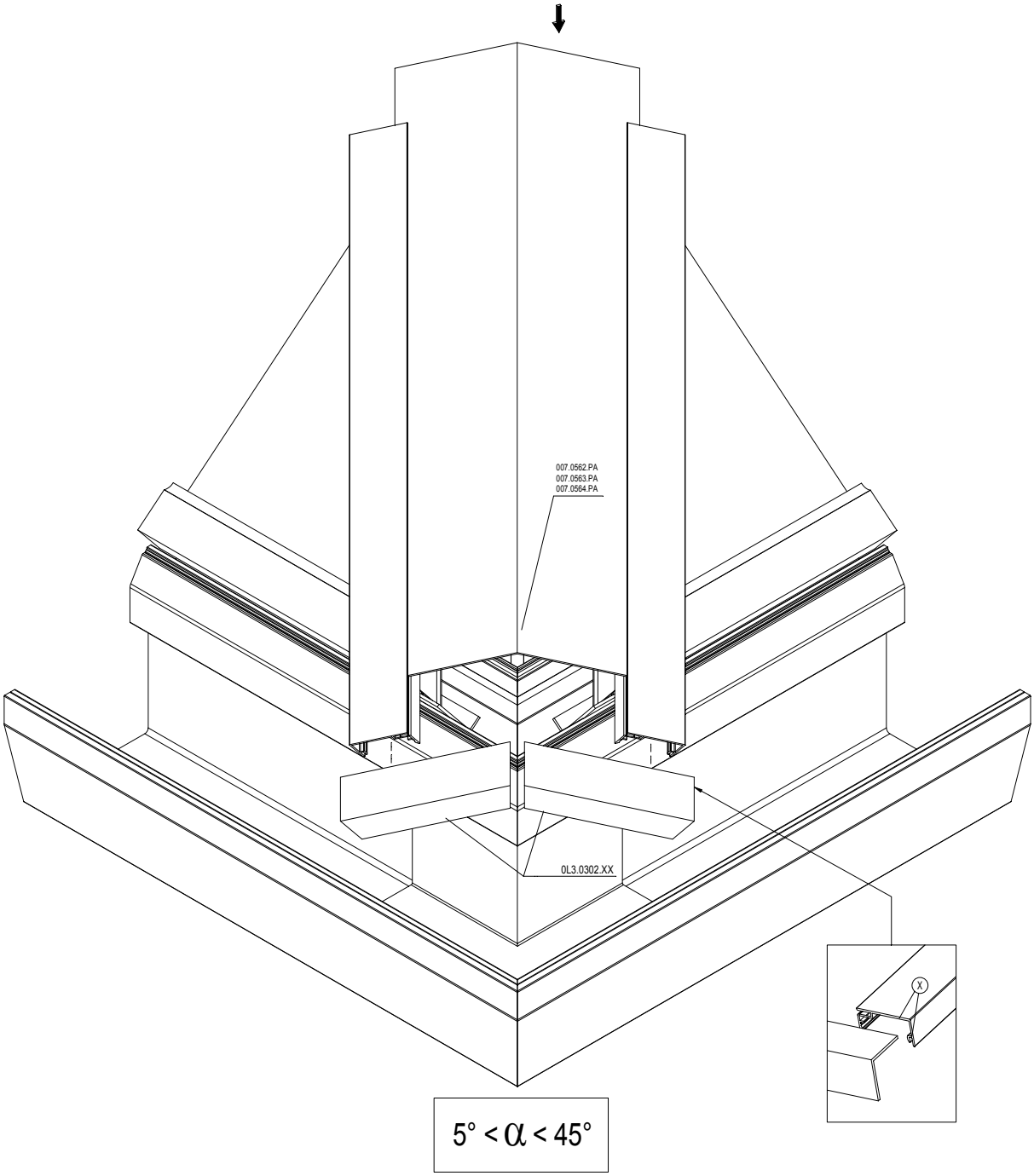

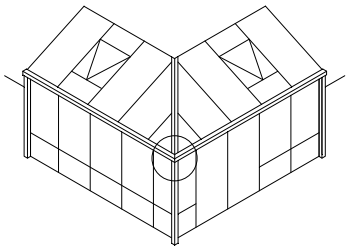

F

D2001609

NOK-MUURVERBINDING
RACCORDEMENT FAITIERE-MUR
RIDGE-WALL CONNECTION
FIRST-WANDVERBINDUNG

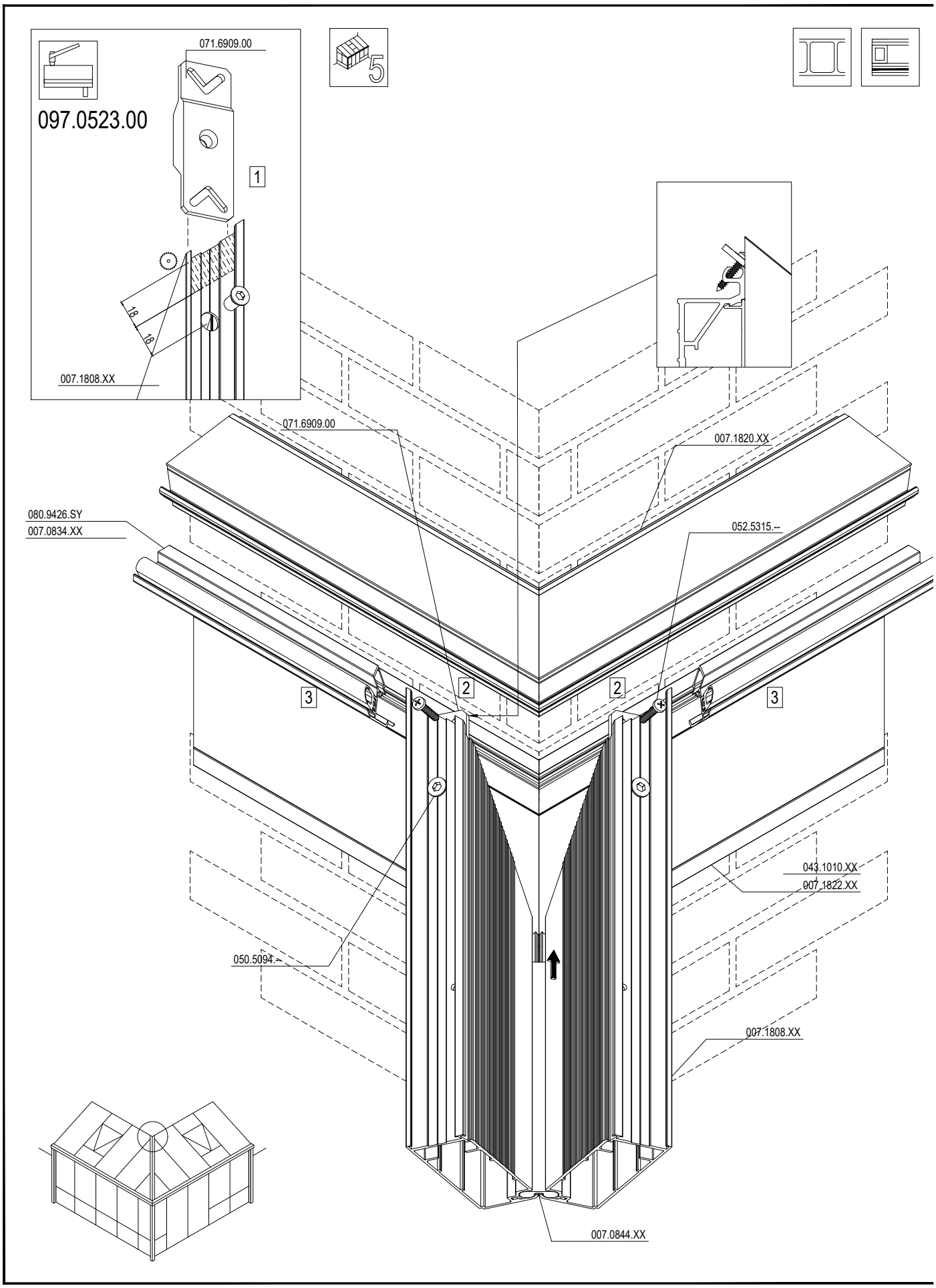

F

NOK-MUURVERBINDING
RACCORDEMENT FAITIERE-MUR
RIDGE-WALL CONNECTION
FIRST-WANDVERBINDUNG

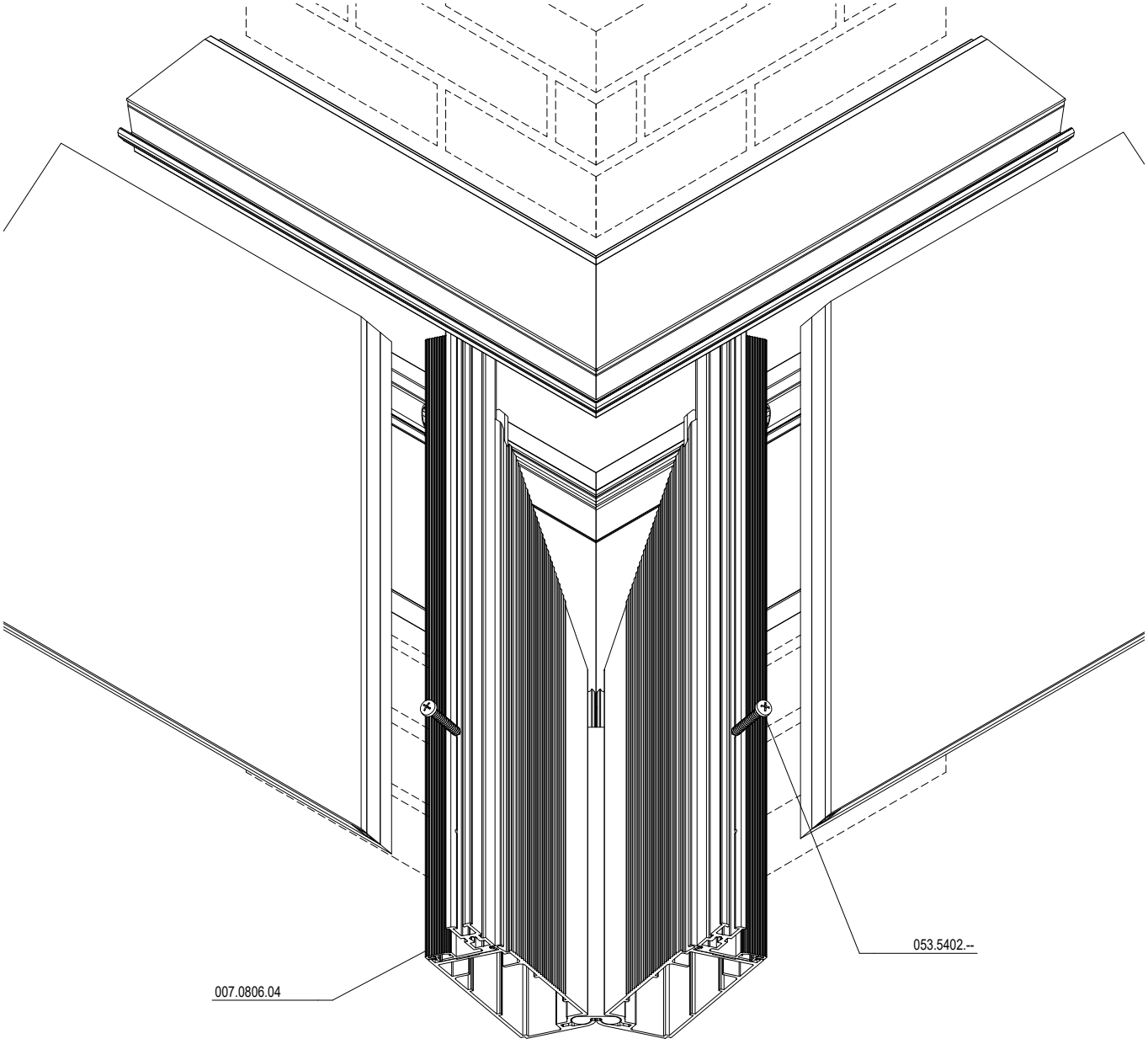

$5° < \alpha < 45°$

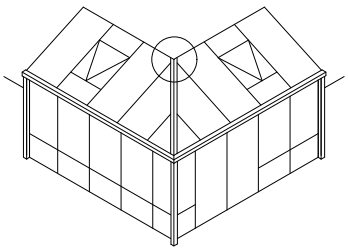

F

D2001610

NOK-MUURVERBINDING
RACCORDEMENT FAITIERE-MUR
RIDGE-WALL CONNECTION
FIRST-WANDVERBINDUNG

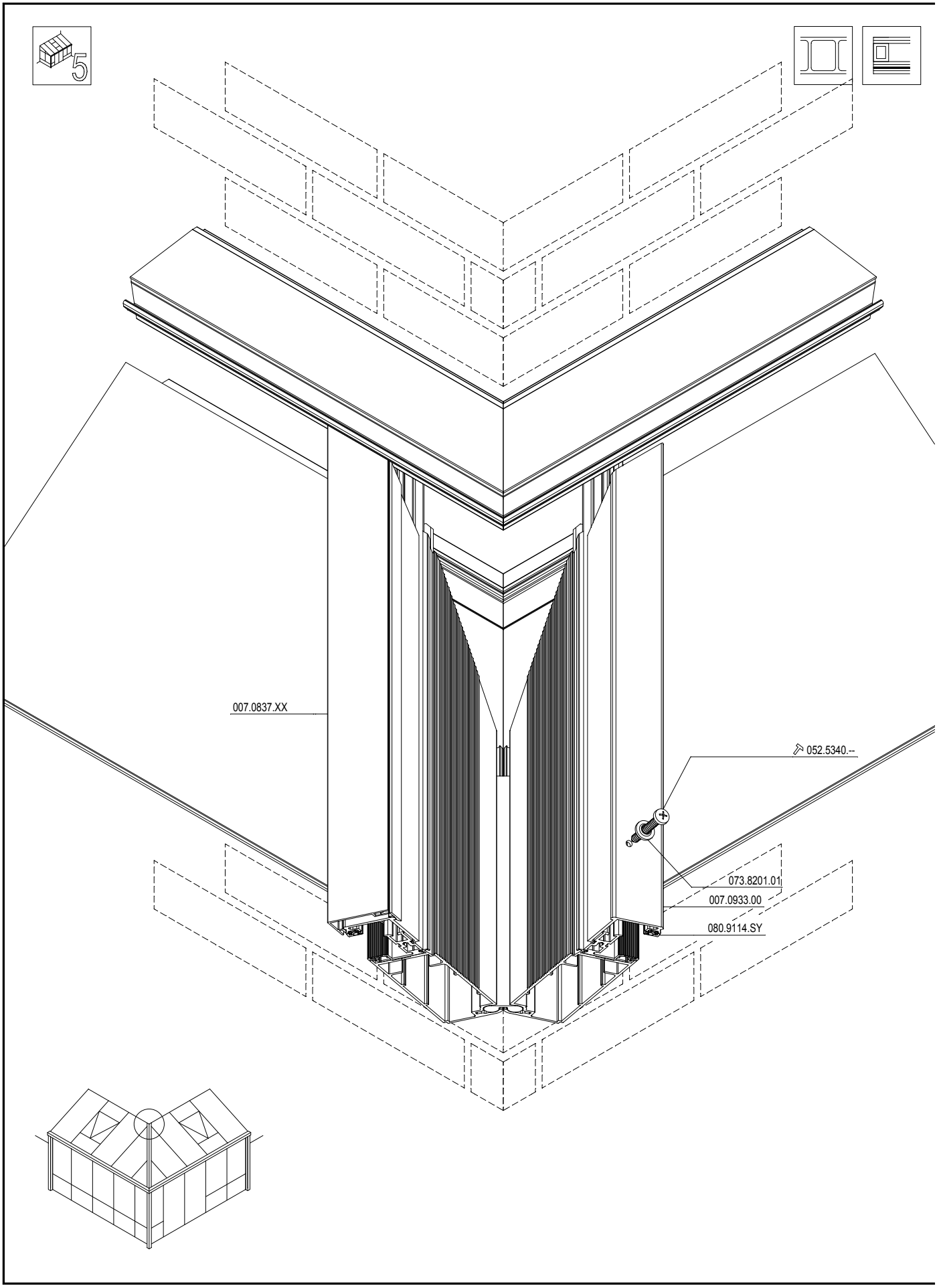

F

NOK-MUURVERBINDING
RACCORDEMENT FAITIERE-MUR
RIDGE-WALL CONNECTION
FIRST-WANDVERBINDUNG

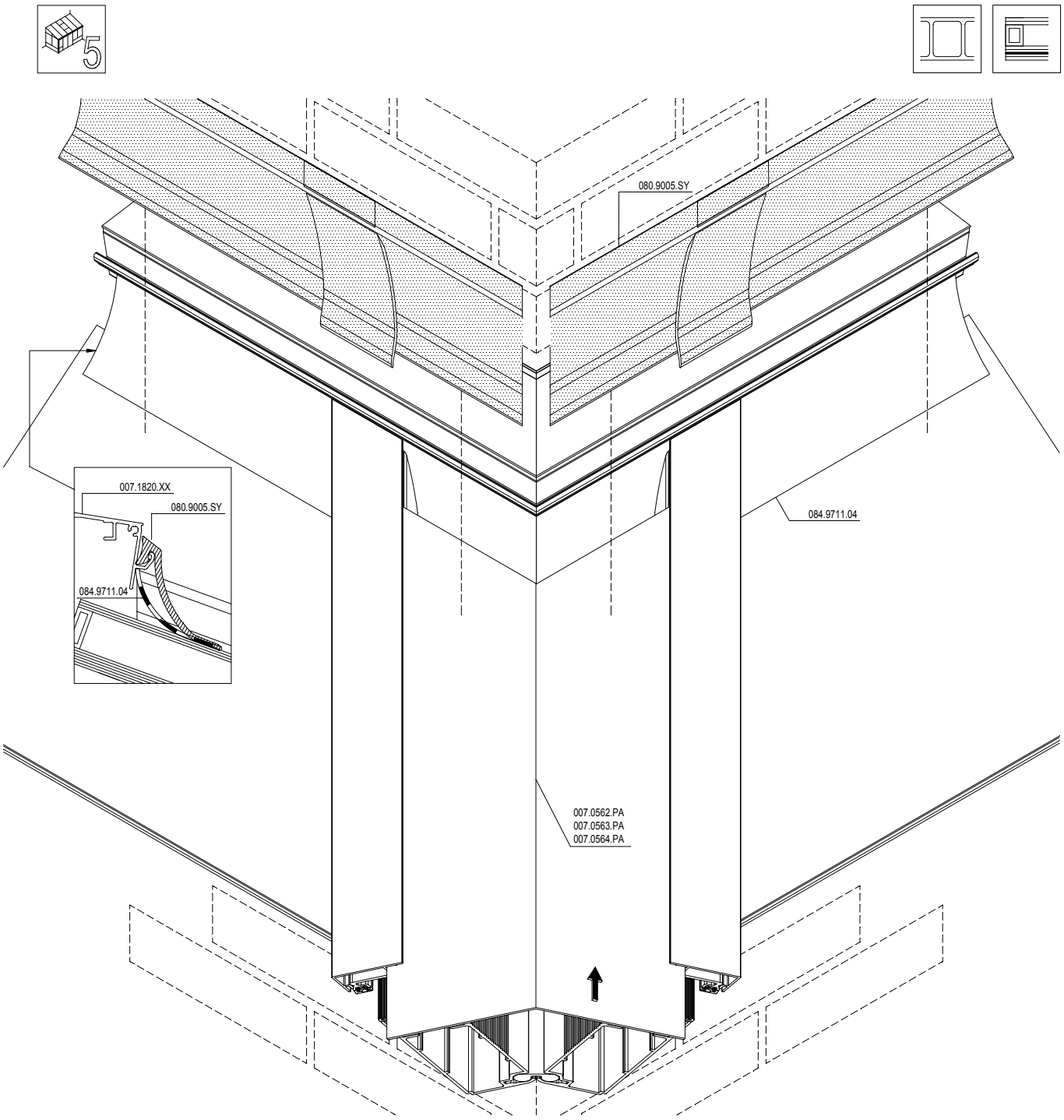

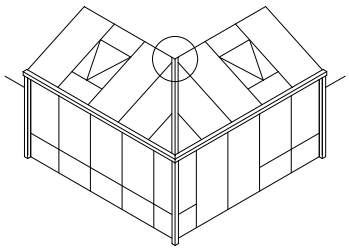

$5° < \alpha < 45°$

F

D200611

DUBBELE RAAMDEUR MET AANSLAG
PORTE-FENETRE DOUBLE AVEC BUTEE
DOUBLE WINDOW-DOOR WITH STOP
ZWEIFLUEGELIGE FENSTERTUER MIT ANSCHLAG

D2001363

DUBBELE RAAMDEUR MET AANSLAG
PORTE-FENETRE DOUBLE AVEC BUTEE
DOUBLE WINDOW-DOOR WITH STOP
ZWEIFLUEGELIGE FENSTERTUER MIT ANSCHLAG

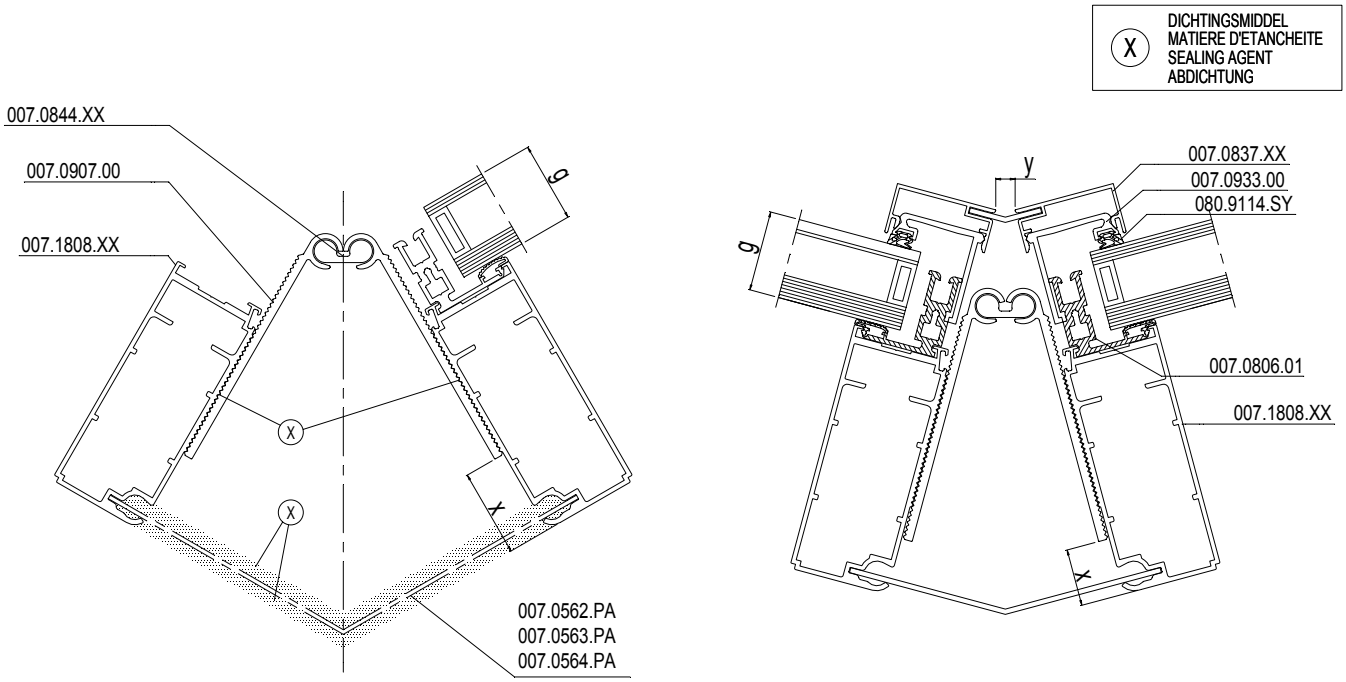

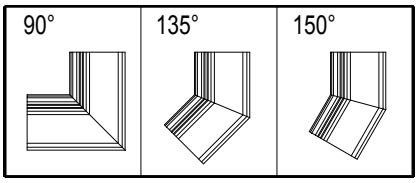

g = 32 mm
90°

α	x	y
5°	39,5 mm	24 mm
10°	12,3 mm	15 mm
15°	8,8 mm	8 mm
20°	7,2 mm	0 mm
25°	15,8 mm	0 mm
30°	24,5 mm	0 mm
35°	29,6 mm	0 mm
40°	33,3 mm	0 mm
45°	39,5 mm	0 mm

g = 32 mm
135°

α	x	y
5°	23,2 mm	25 mm
10°	26,1 mm	22 mm
15°	27,1 mm	20 mm
20°	22,6 mm	17 mm
25°	13,8 mm	12 mm
30°	14,8 mm	9 mm
35°	12,3 mm	5 mm
40°	7,5 mm	0 mm
45°	10,4 mm	0 mm

g = 32 mm
150°

α	x	y
5°	10,2 mm	25 mm
10°	20,8 mm	24 mm
15°	27,3 mm	22 mm
20°	20,7 mm	20 mm
25°	14,5 mm	17 mm
30°	11,9 mm	14 mm
35°	8,2 mm	11 mm
40°	8,1 mm	9 mm
45°	7,8 mm	7 mm

g = 68 mm
90°

α	x	y
5°	29,5 mm	19 mm
10°	8,3 mm	5 mm
15°	24,9 mm	0 mm
20°	41,2 mm	0 mm
25°	51,8 mm	0 mm
30°	60,5 mm	0 mm
35°	65,6 mm	0 mm
40°	69,3 mm	0 mm
45°	75,5 mm	0 mm

g = 68 mm
135°

α	x	y
5°	20,1 mm	22 mm
10°	11,8 mm	16 mm
15°	10,4 mm	10 mm
20°	8,5 mm	0 mm
25°	15,1 mm	0 mm
30°	26,1 mm	0 mm
35°	36,4 mm	0 mm
40°	43,5 mm	0 mm
45°	48,6 mm	0 mm

g = 68 mm
150°

α	x	y
5°	25,5 mm	24 mm
10°	31,8 mm	22 mm
15°	35,6 mm	19 mm
20°	28,7 mm	15 mm
25°	28,3 mm	12 mm
30°	28,3 mm	9 mm
35°	23,2 mm	5 mm
40°	15,1 mm	0 mm
45°	22,8 mm	0 mm

DAL-GOOTVERBINDING
RACCORDEMENT NOUE-GOUTTIERE
VALLEY-GUTTER CONNECTION
KEHL-RINNENVERBINDUNG

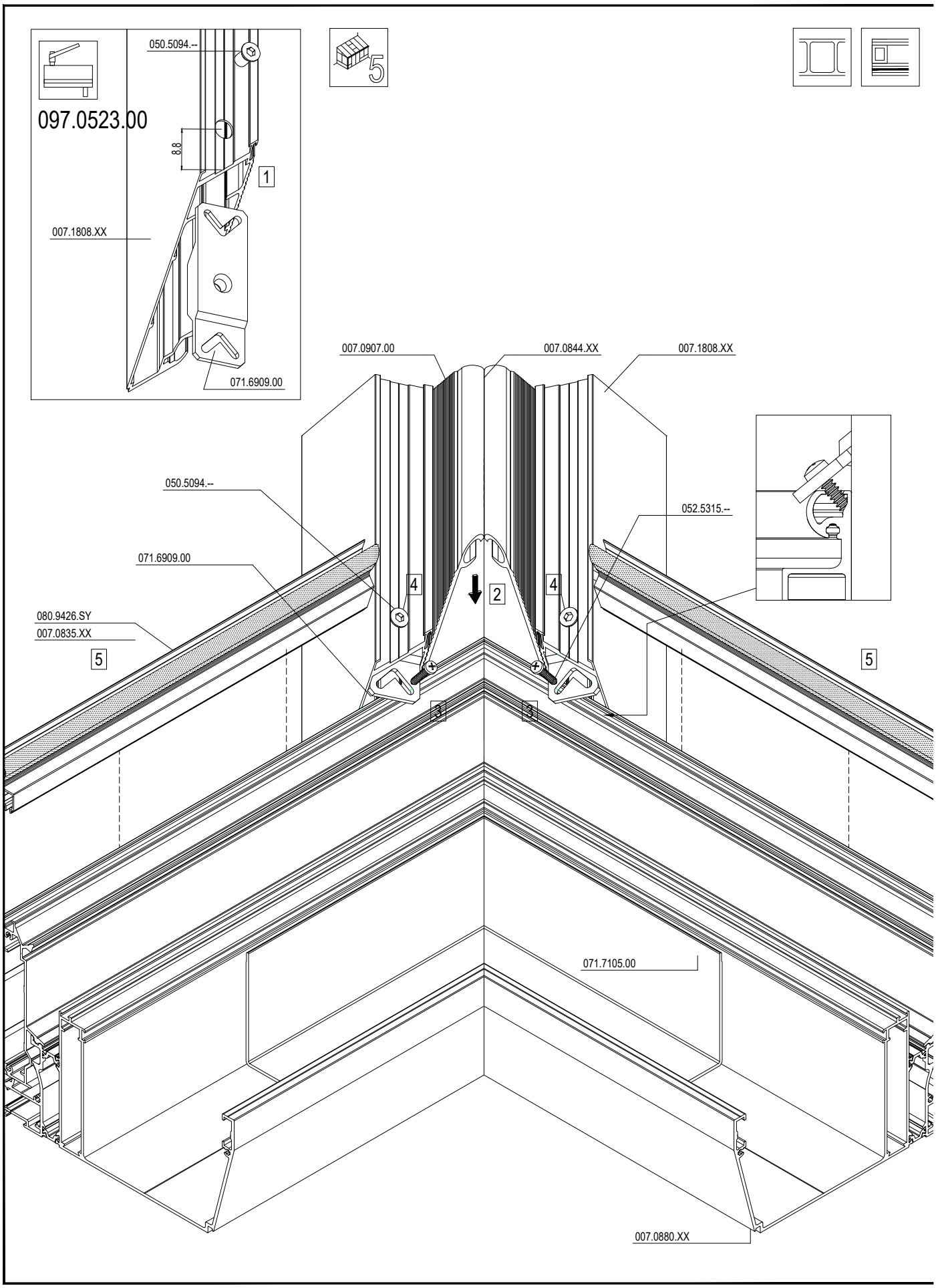

DAL-GOOTVERBINDING
RACCORDEMENT NOUE-GOUTTIERE
VALLEY-GUTTER CONNECTION
KEHL-RINNENVERBINDUNG

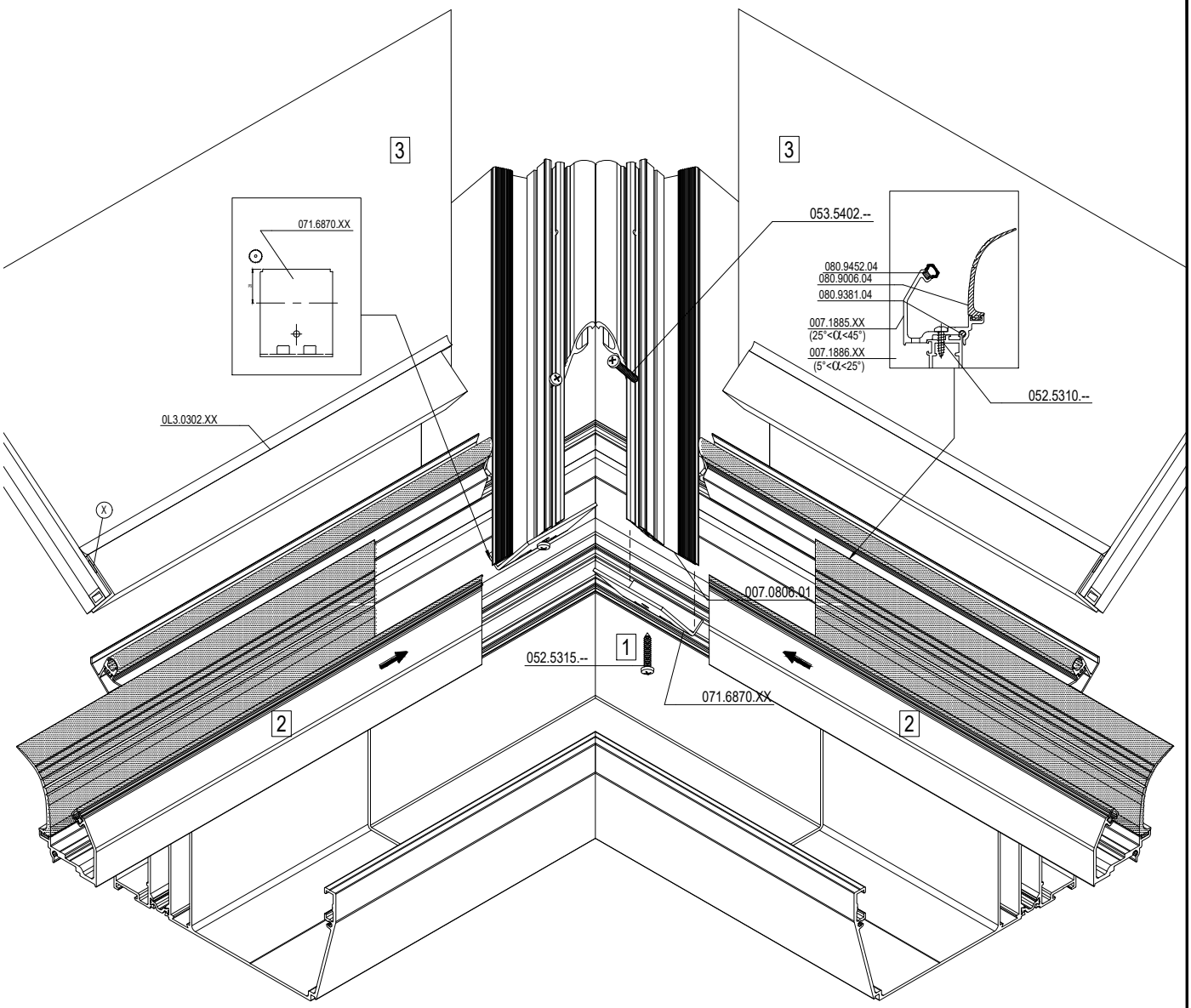

5° < α < 45°

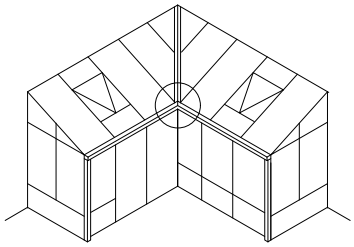

F

D2001604

DAL-GOOTVERBINDING
RACCORDEMENT NOUE-GOUTTIERE
VALLEY-GUTTER CONNECTION
KEHL-RINNENVERBINDUNG

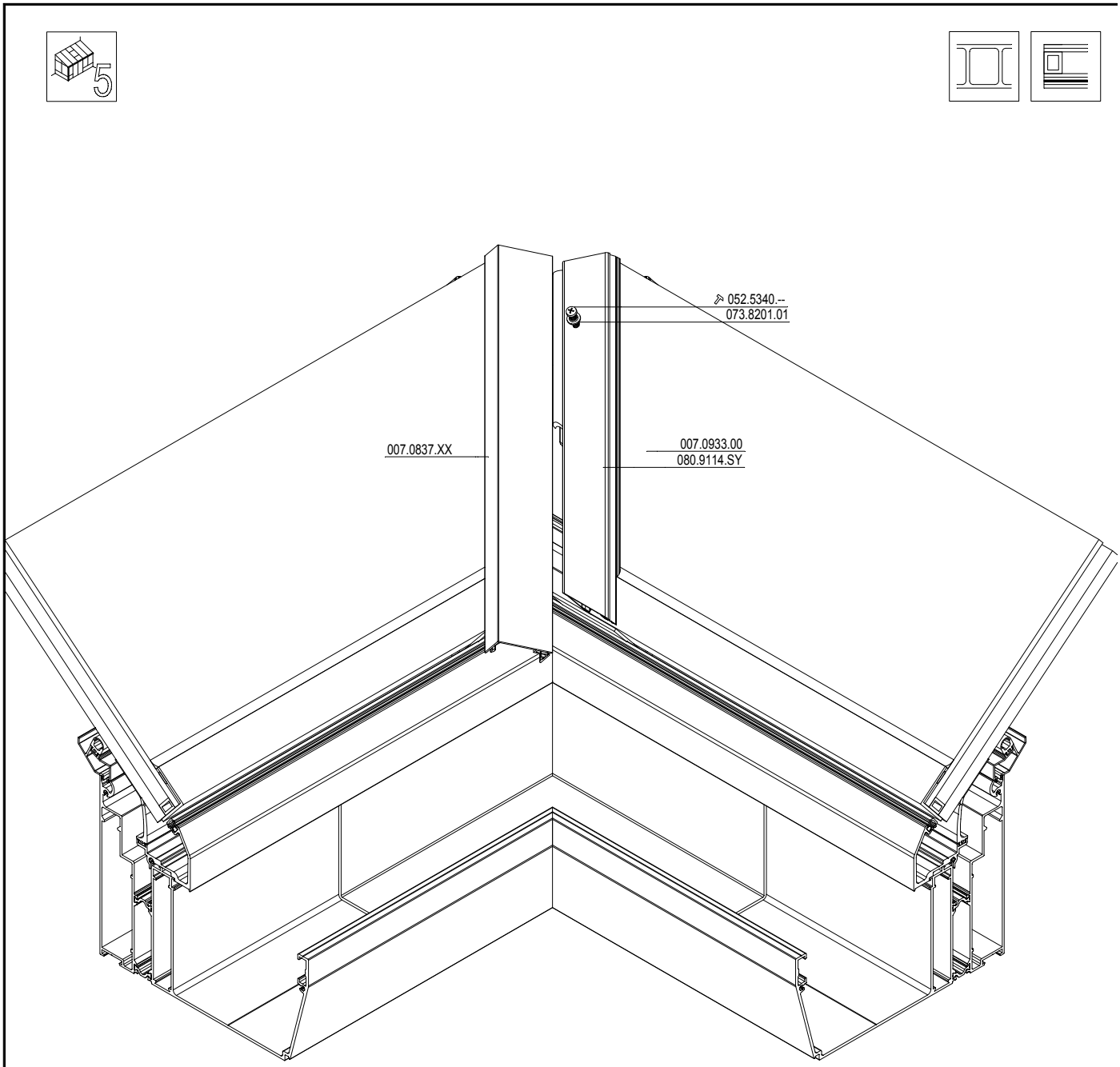

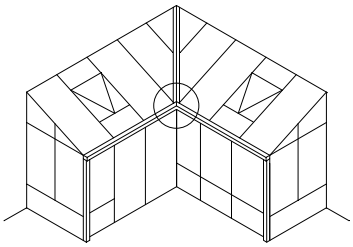

F

D2001605

DAL-GOOTVERBINDING
RACCORDEMENT NOUE-GOUTTIERE
VALLEY-GUTTER CONNECTION
KEHL-RINNENVERBINDUNG

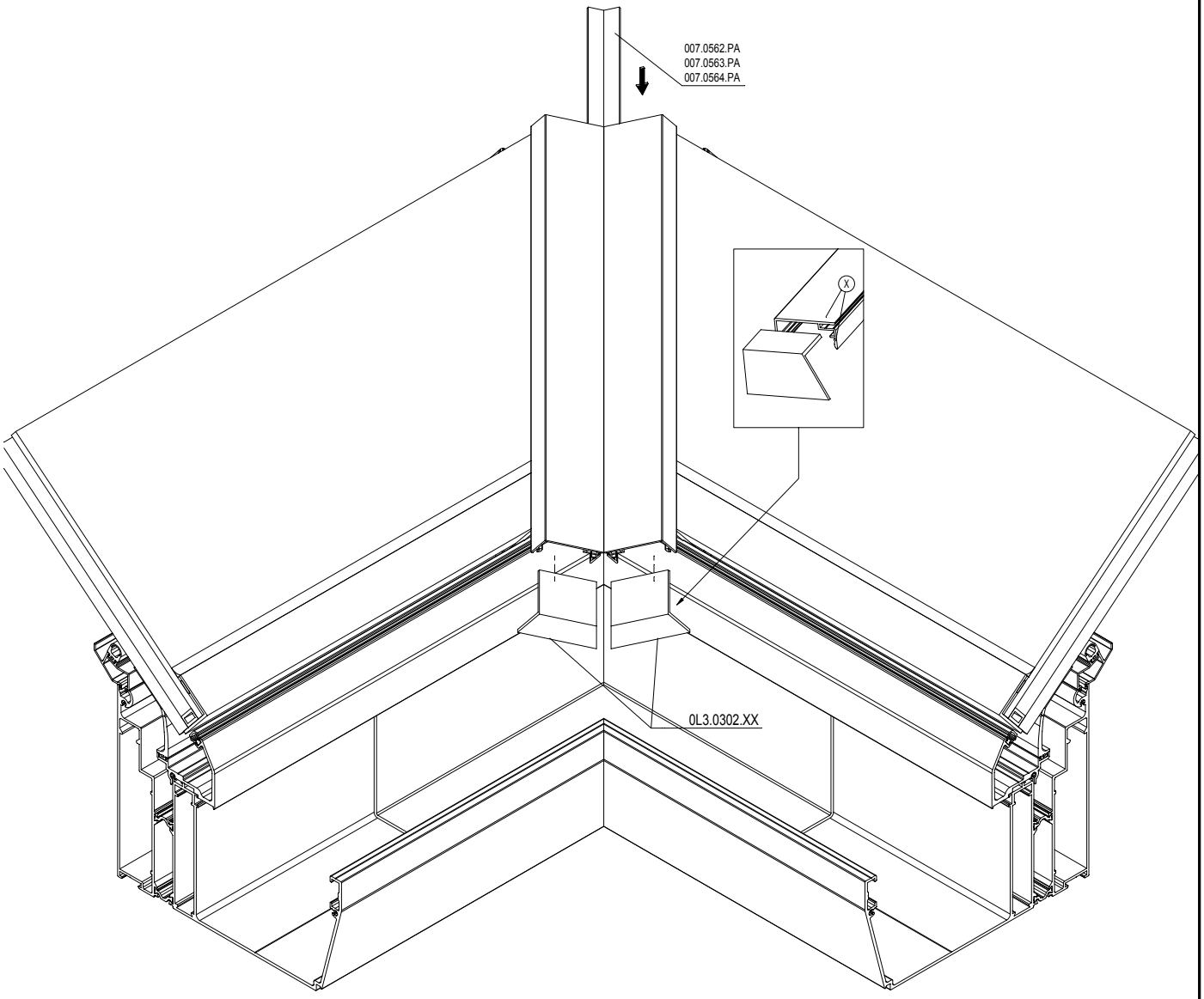

$5° < \alpha < 45°$

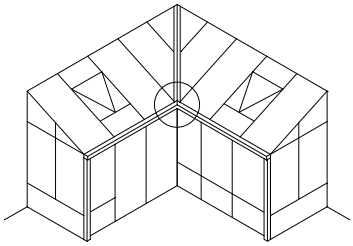

F

D2001605

DAL-MUURVERBINDING
RACCORDEMENT NOUE-MUR
VALLEY-WALL CONNECTION
KEHL-WANDVERBINDUNG

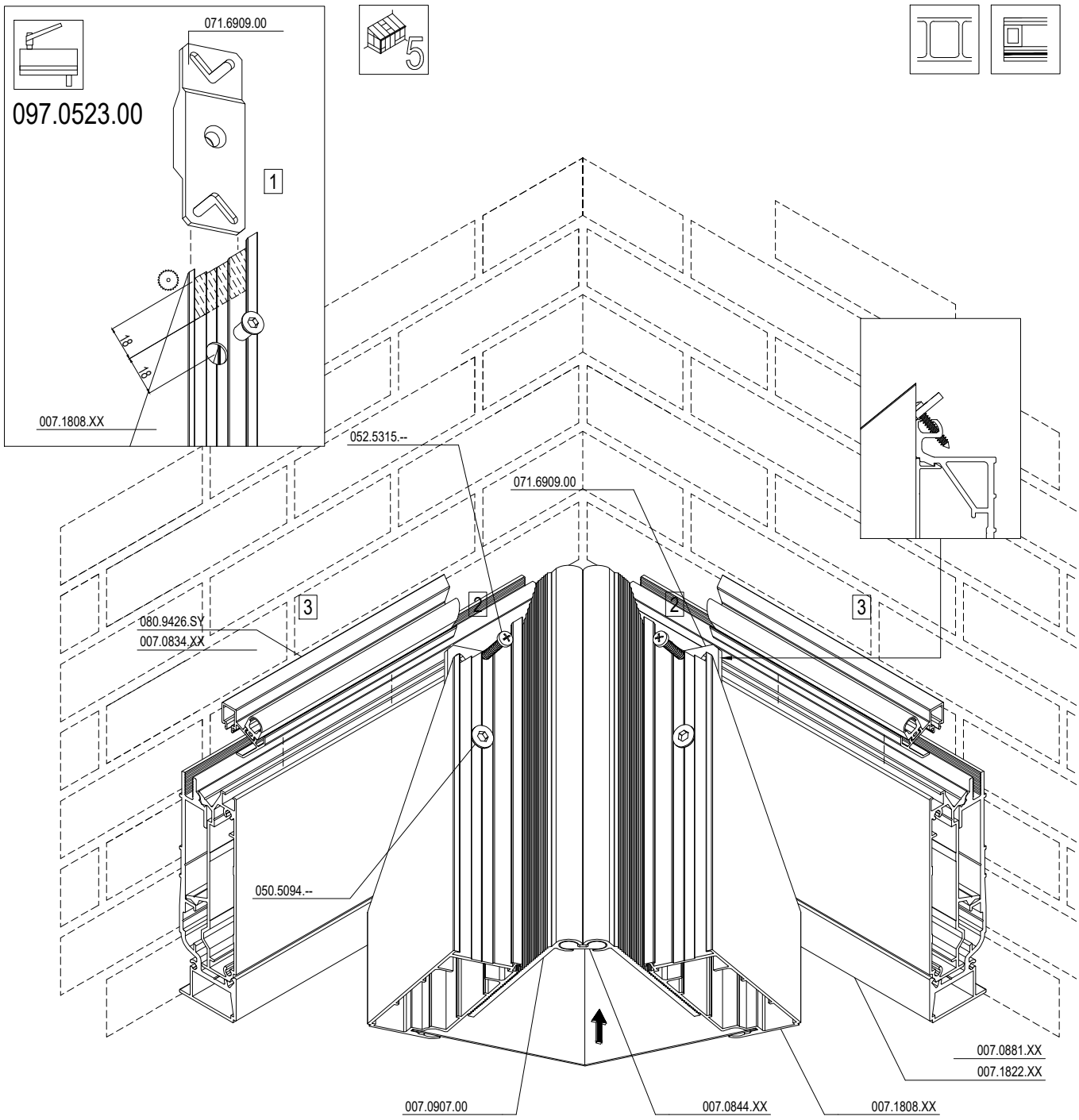

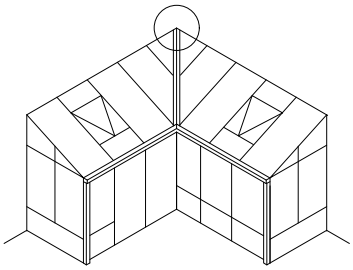

F

D2001606

DAL-MUURVERBINDING
RACCORDEMENT NOUE-MUR
VALLEY-WALL CONNECTION
KEHL-WANDVERBINDUNG

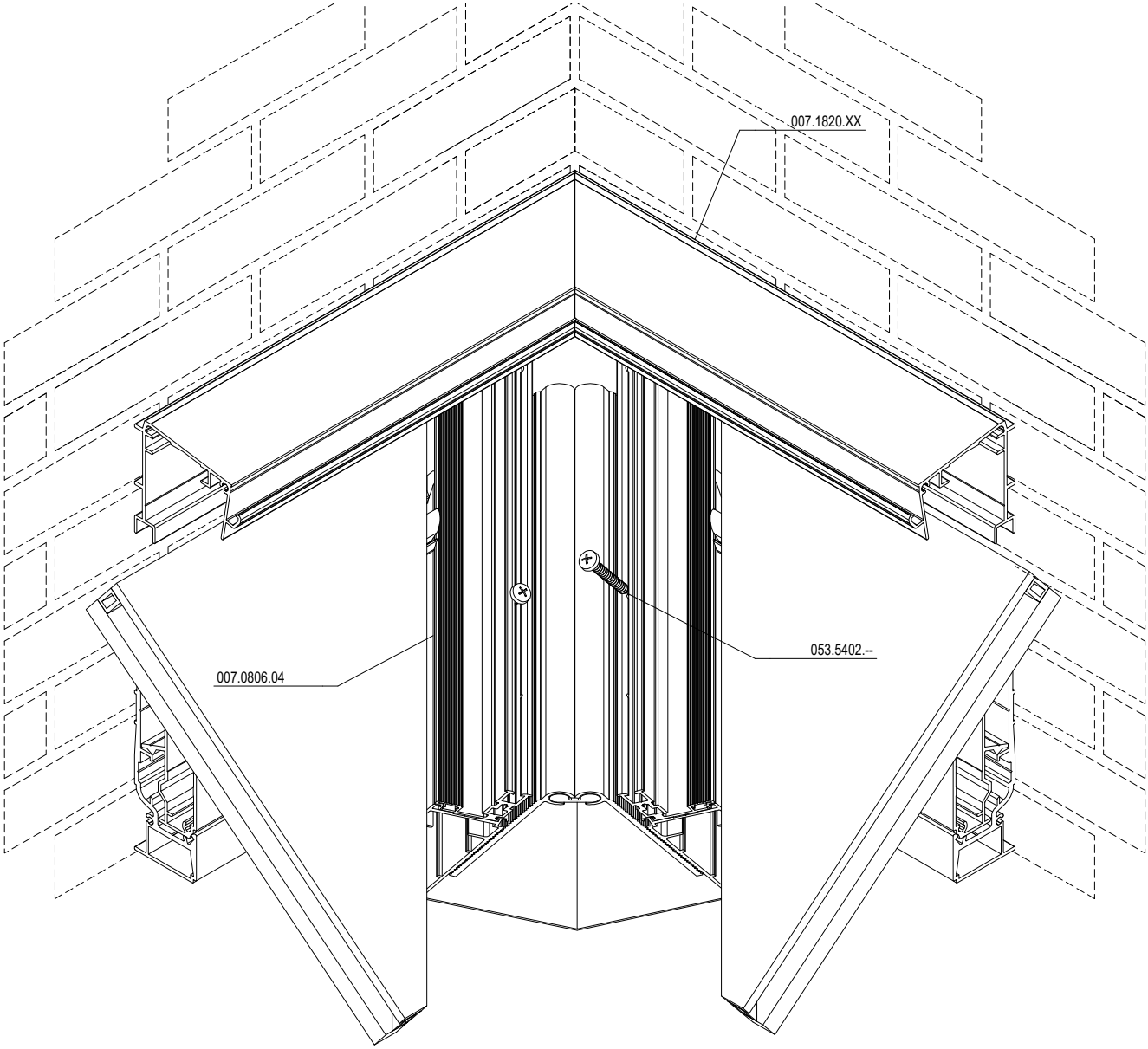

$5° < \alpha < 45°$

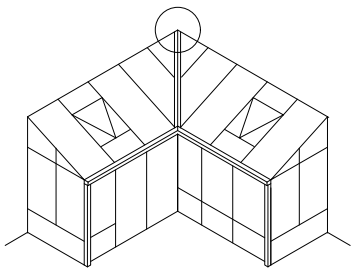

F

D2001606

DAL-MUURVERBINDING
RACCORDEMENT NOUE-MUR
VALLEY-WALL CONNECTION
KEHL-WANDVERBINDUNG

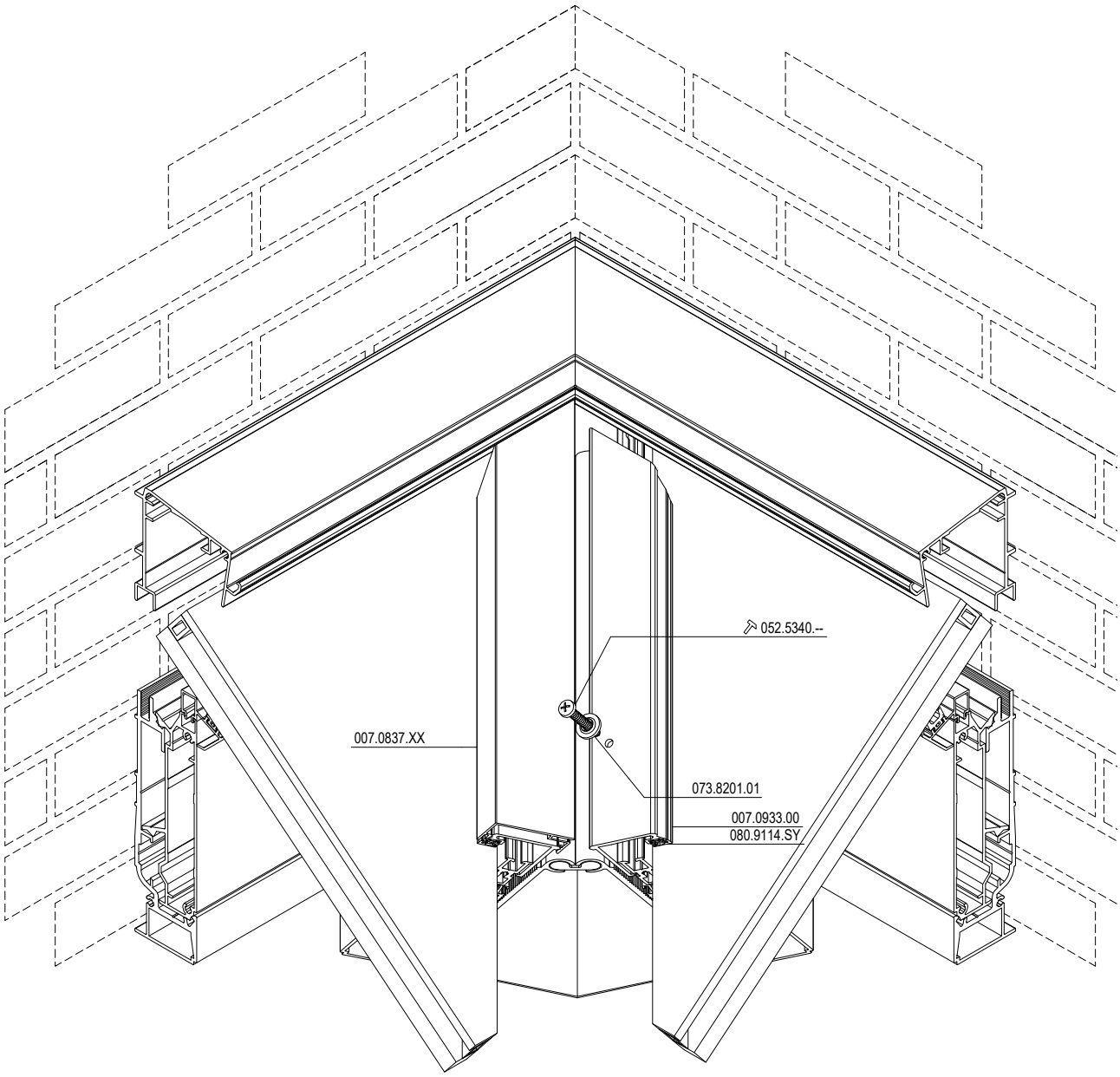

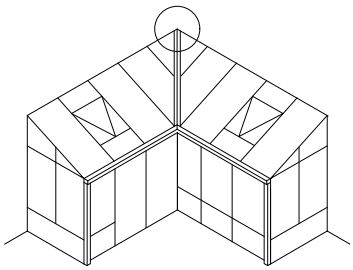

F

D2001607

DAL-MUURVERBINDING
RACCORDEMENT NOUE-MUR
VALLEY-WALL CONNECTION
KEHL-WANDVERBINDUNG

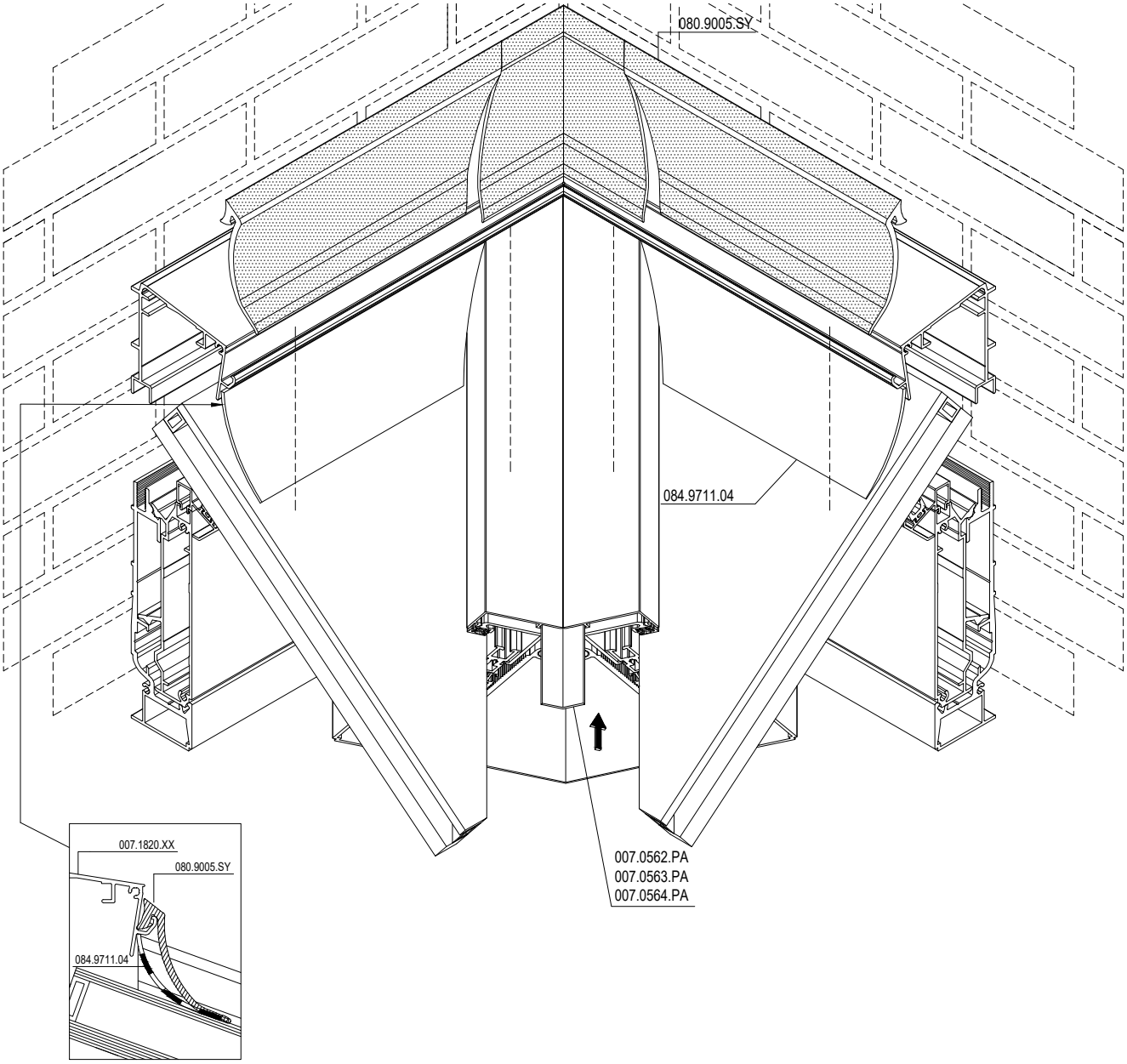

$5° < \alpha < 45°$

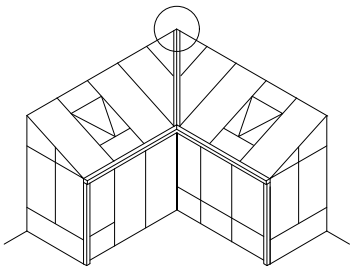

F

D2001607

F

D2001614

DAL-NOKVERBINDING
RACCORDEMENT NOUE-FAITIERE
VALLEY-RIDGE CONNECTION
KEHL-FIRSTVERBINDUNG

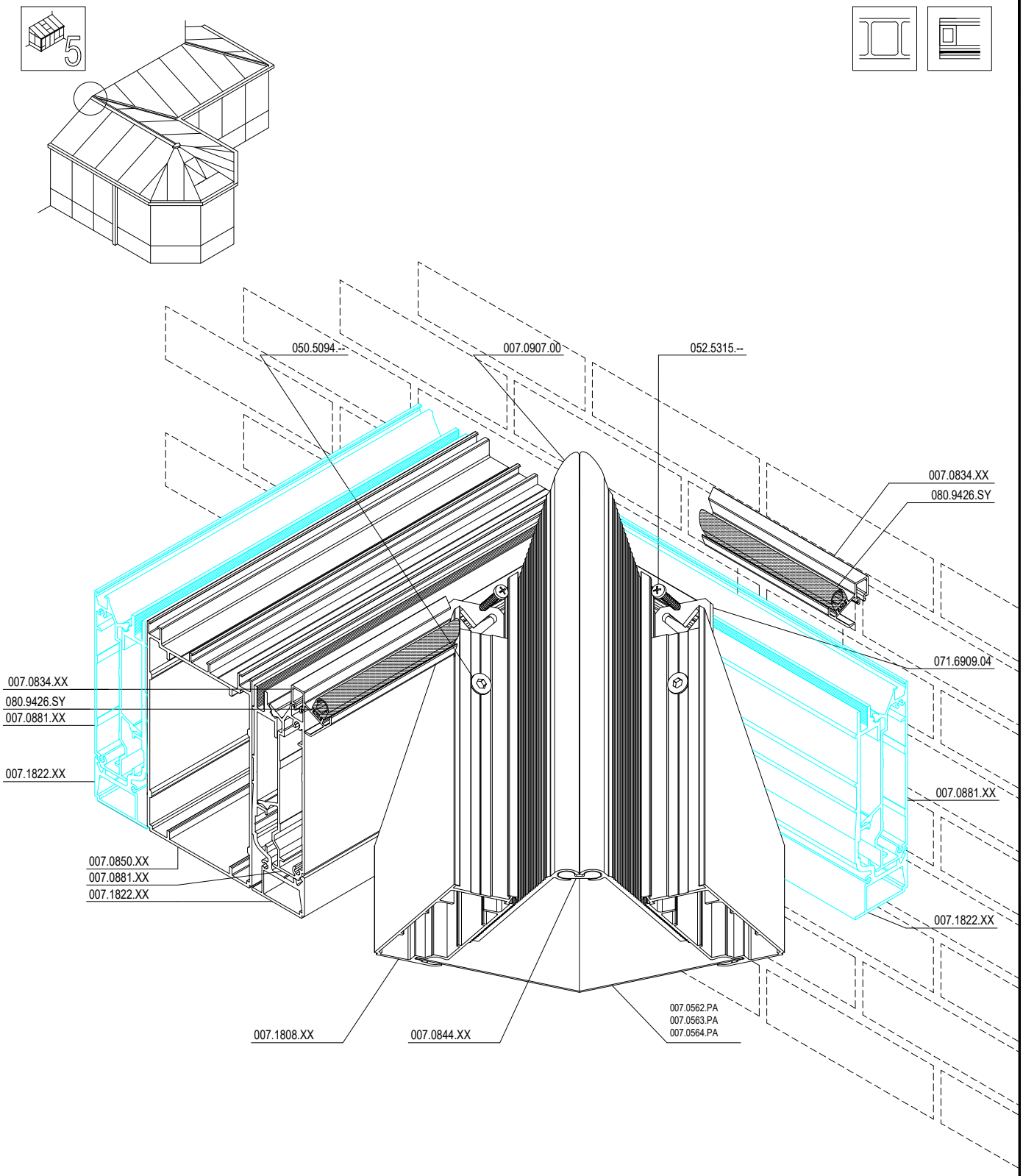

F

D2001614

NOK-MIDDENVERBINDING
RACCORDEMENT CENTRE-FAITIERE
RIDGE CENTER CONNECTION
FIRST-MITTE-VERBINDUNG

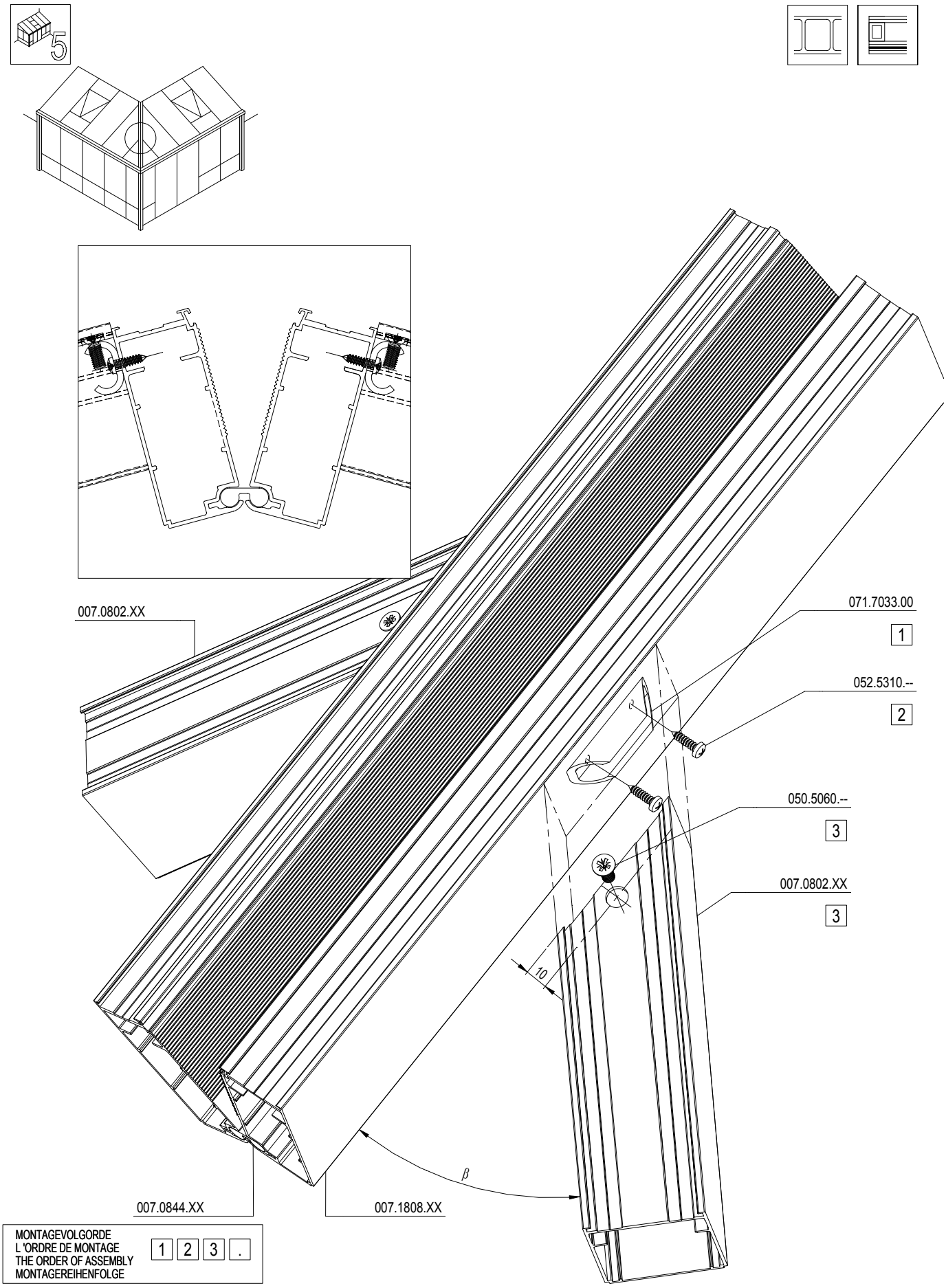

NOK-MIDDENVERBINDING
RACCORDEMENT CENTRE-FAITIERE
RIDGE CENTER CONNECTION
FIRST-MITTE-VERBINDUNG

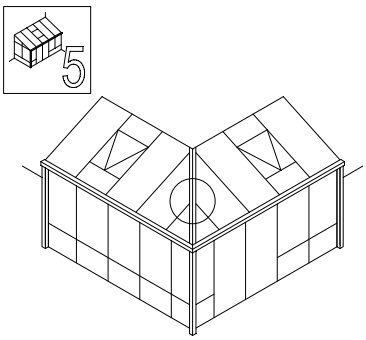

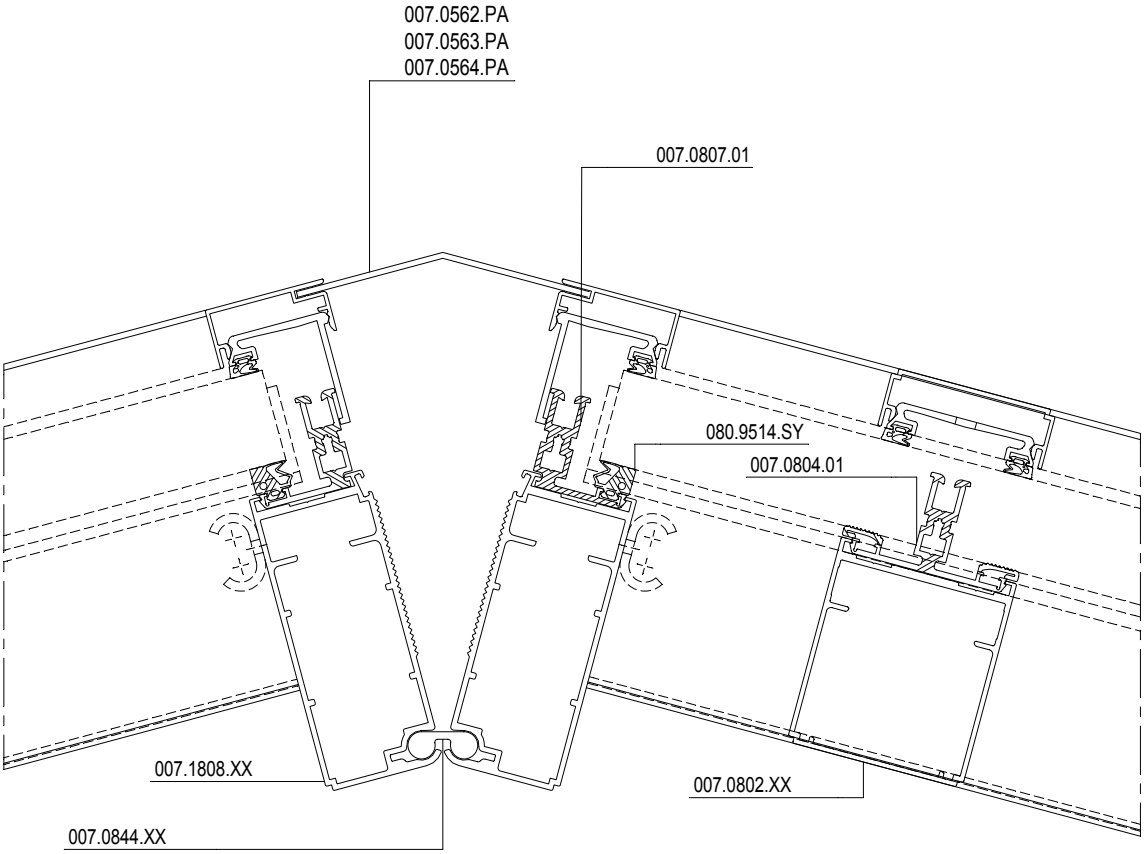

$5° < \alpha < 45°$

F

D200613

DAL-MIDDENVERBINDING
RACCORDEMENT CENTRE-NOUE
VALLEY-CENTER CONNECTION
KEHL-MITTE-VERBINDUNG

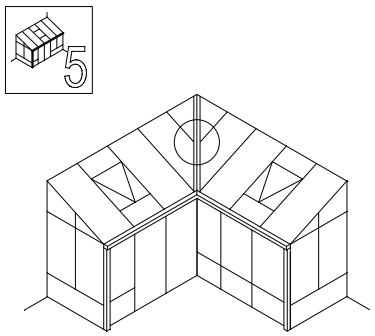

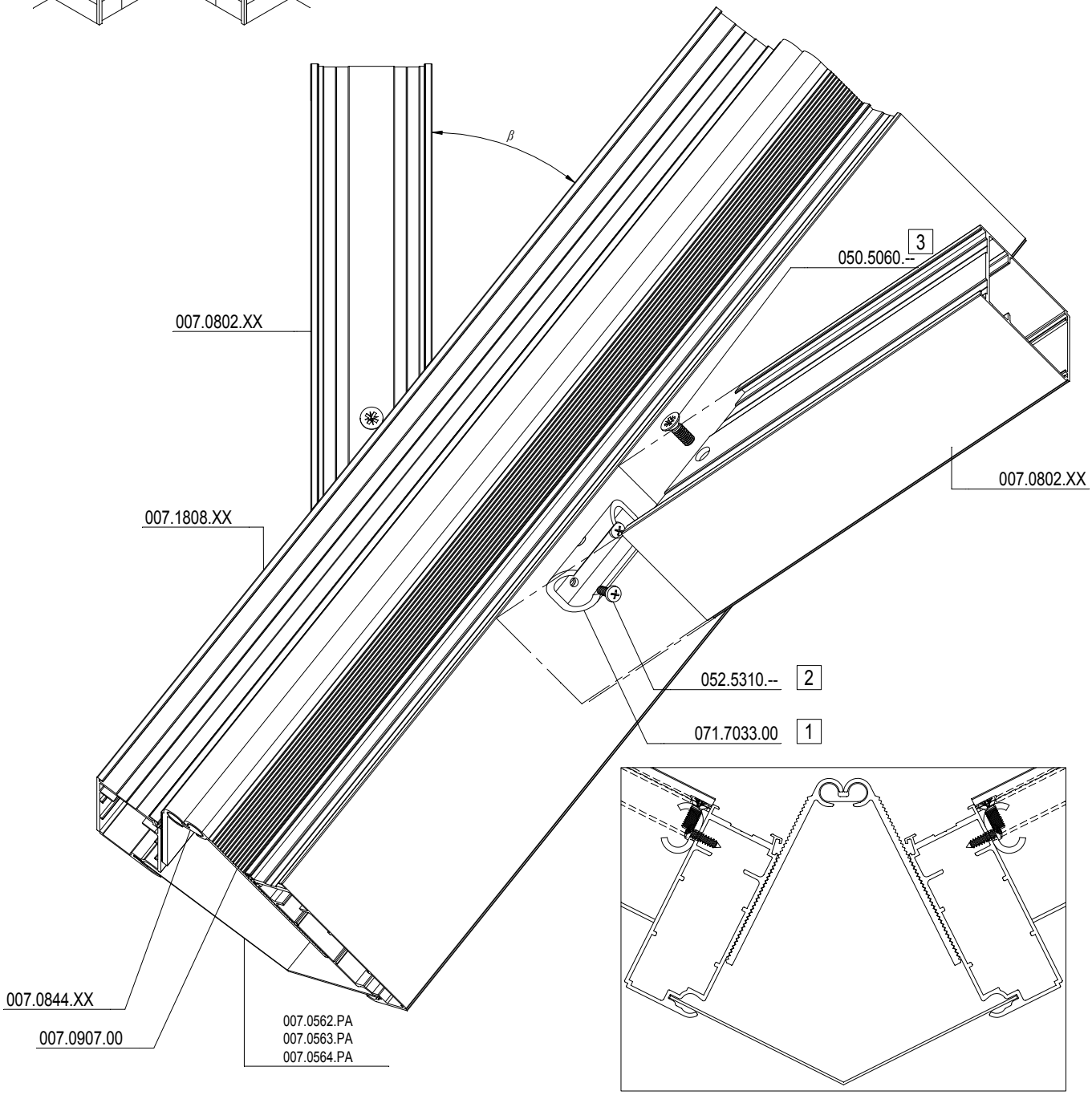

MONTAGEVOLGORDE L'ORDRE DE MONTAGE THE ORDER OF ASSEMBLY MONTAGEREIHENFOLGE	1	2	3	.

D2001612

F

DAL-MIDDENVERBINDING
RACCORDEMENT CENTRE-NOUE
VALLEY-CENTER CONNECTION
KEHL-MITTE-VERBINDUNG

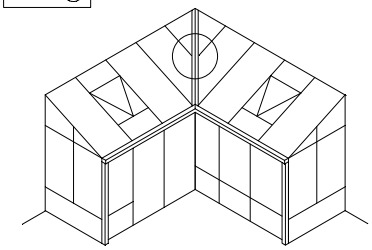

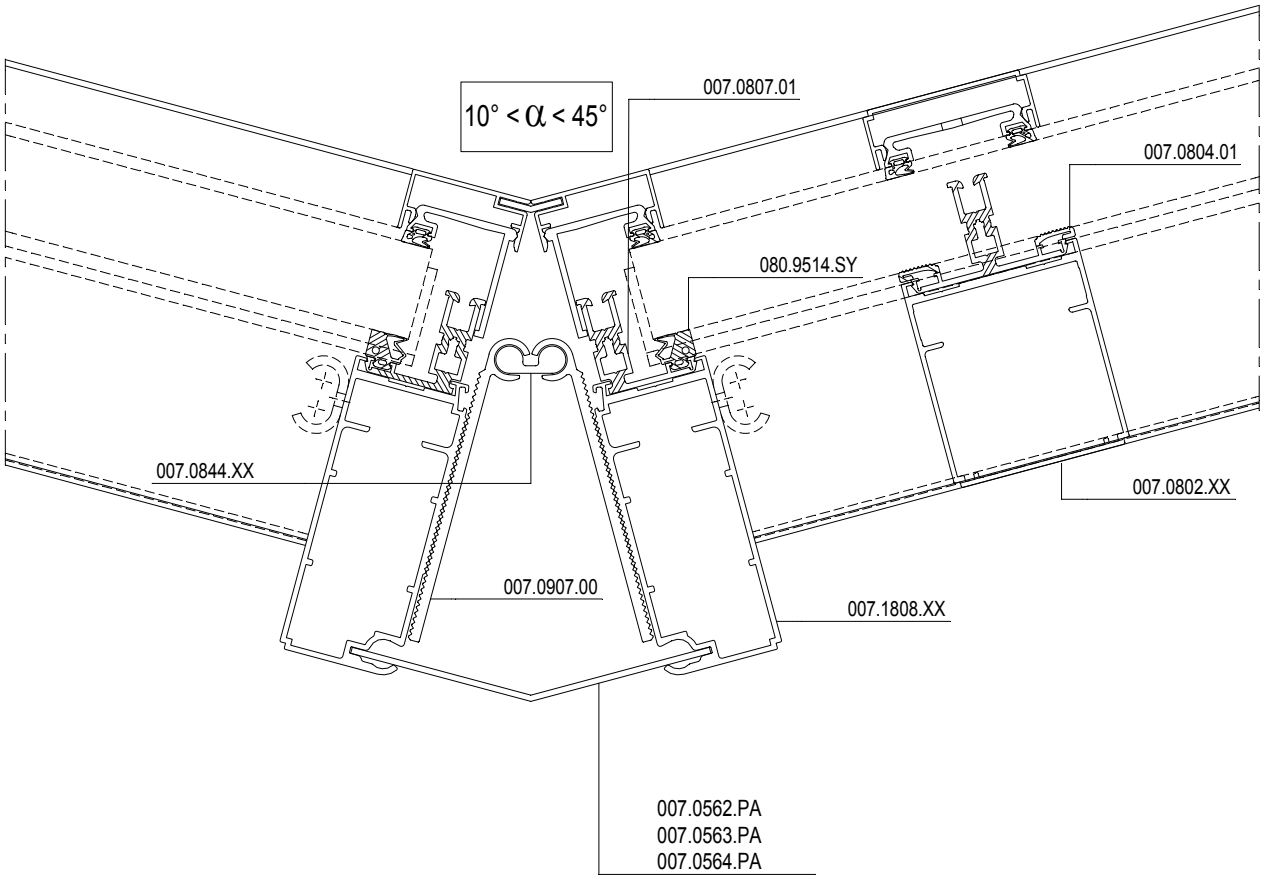

F

D200612

NOK-MIDDENVERBINDING
RACCORDEMENT CENTRE-FAITIERE
RIDGE CENTER CONNECTION
FIRST-MITTE-VERBINDUNG

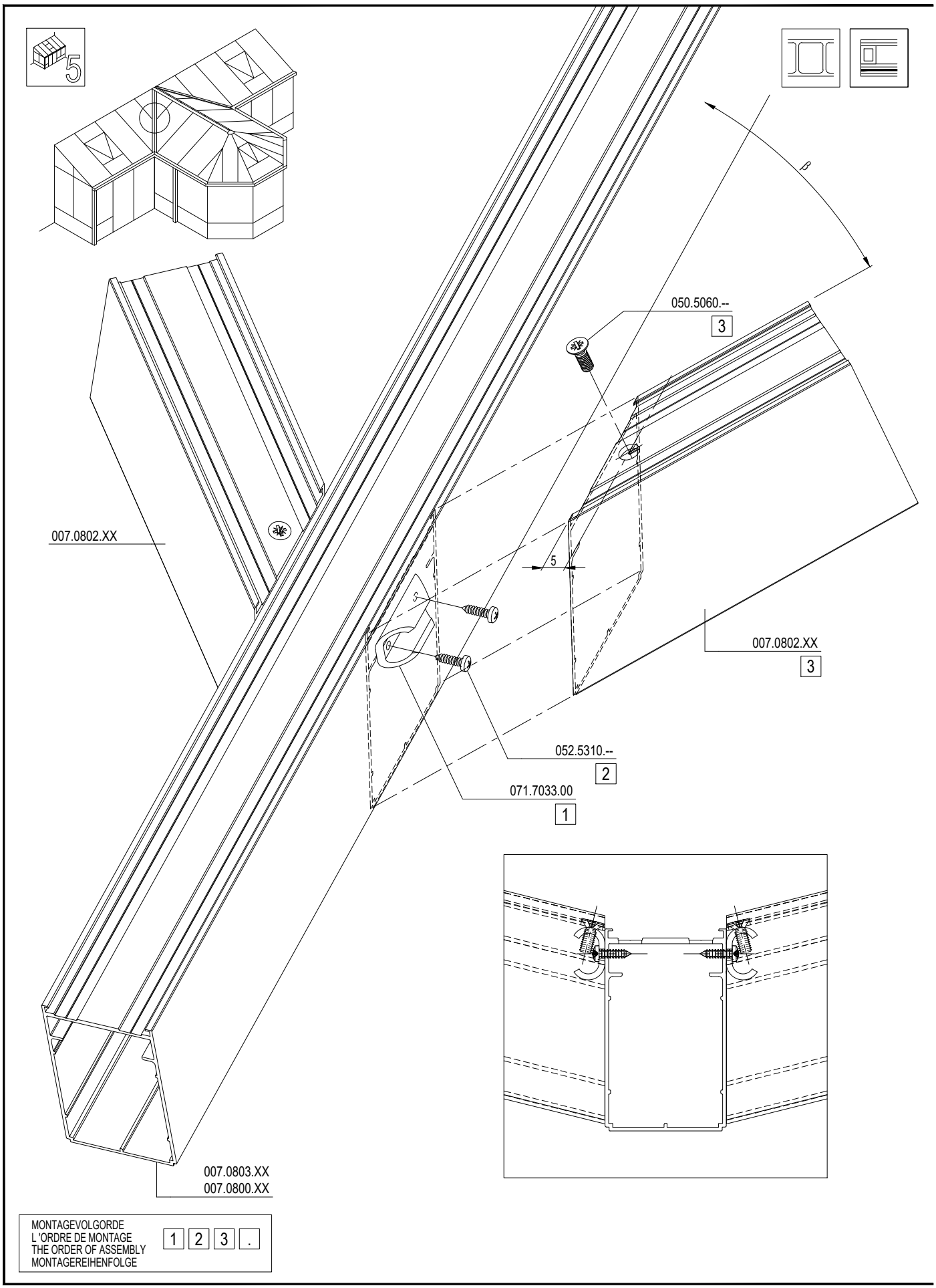

MONTAGEVOLGORDE
L 'ORDRE DE MONTAGE
THE ORDER OF ASSEMBLY
MONTAGEREIHENFOLGE

1 2 3 .

D0070145

F

NOK-MIDDENVERBINDING
RACCORDEMENT CENTRE-FAITIERE
RIDGE CENTER CONNECTION
FIRST-MITTE-VERBINDUNG

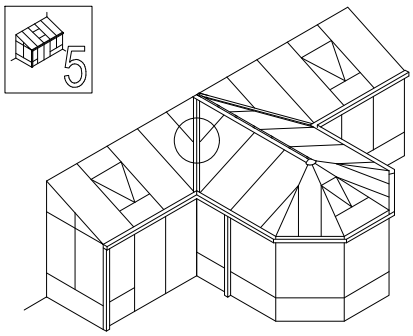

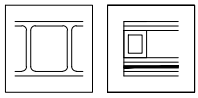

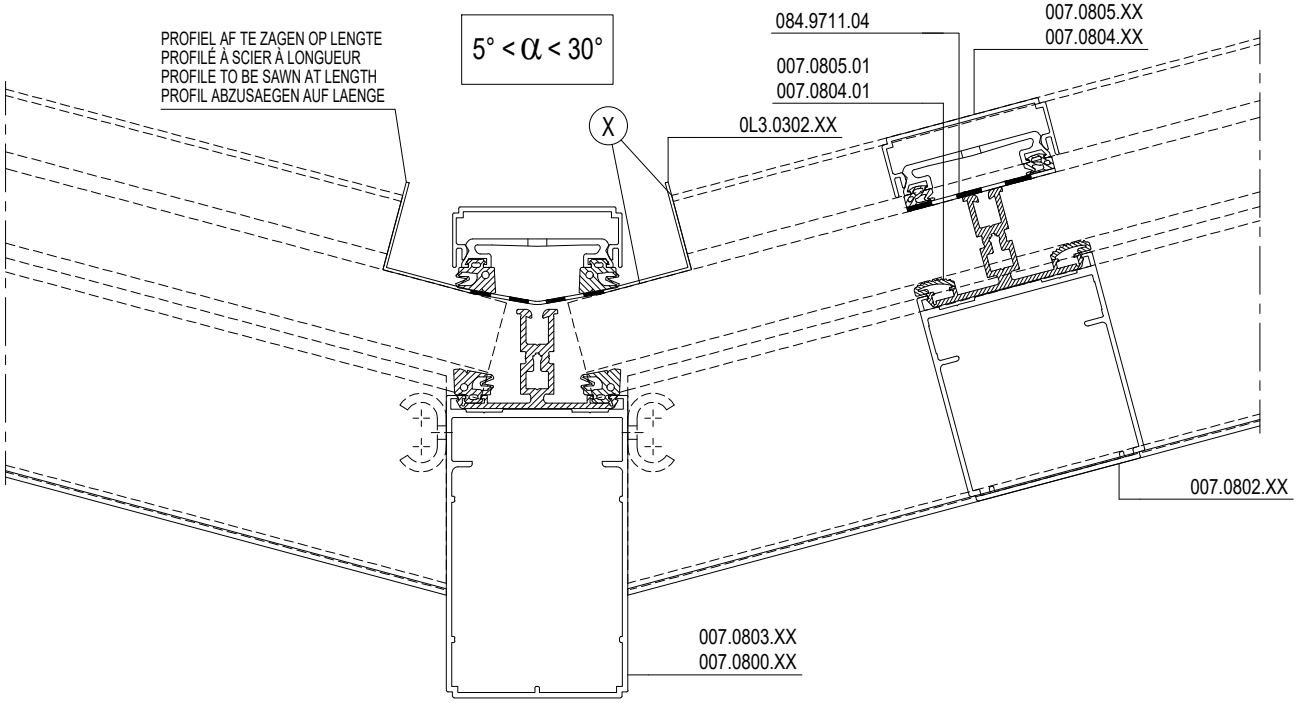

X DICHTINGSMIDDEL
MATIERE D'ETANCHEITE
SEALING AGENT
ABDICHTUNG

F

D0070145

NOK-GOOTVERBINDING
RACCORDEMENT FAITIERE-GOUTTIERE
RIDGE-GUTTER CONNECTION
FIRST-RINNENVERBINDUNG

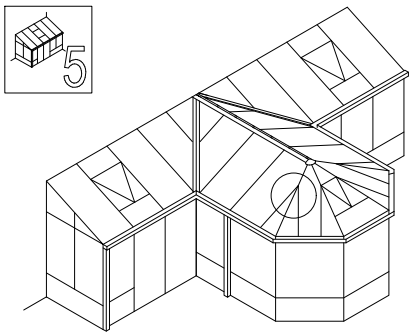

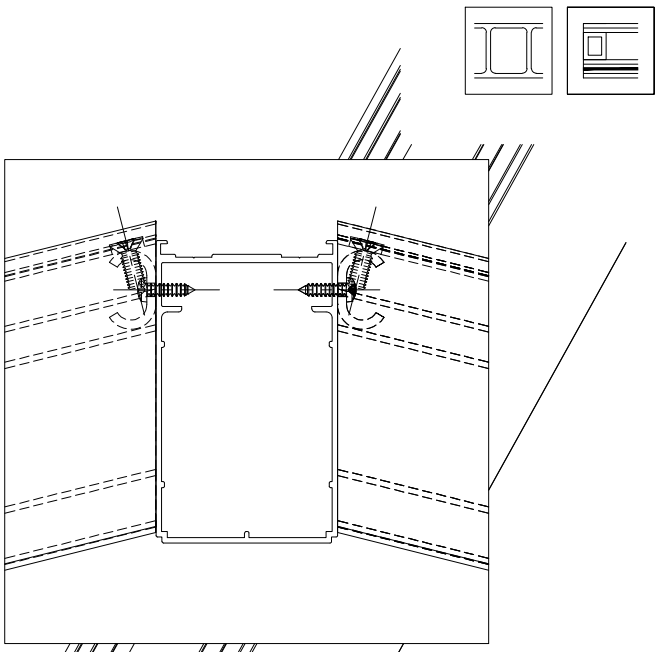

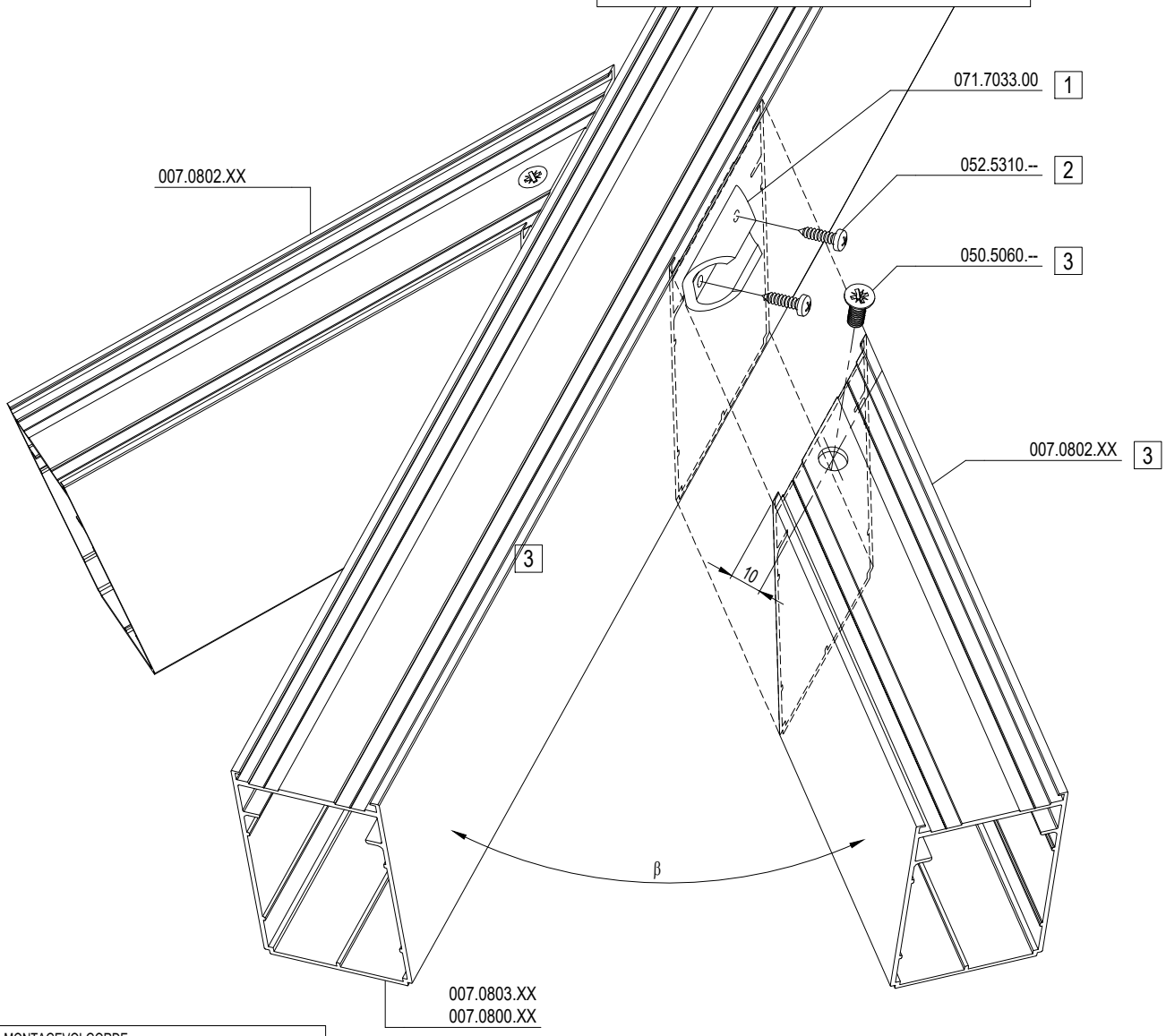

MONTAGEVOLGORDE
L 'ORDRE DE MONTAGE
THE ORDER OF ASSEMBLY
MONTAGEREIHENFOLGE

1 2 3 .

D0070146

F

NOK-GOOTVERBINDING
RACCORDEMENT FAITIERE-GOUTTIERE
RIDGE-GUTTER CONNECTION
FIRST-RINNENVERBINDUNG

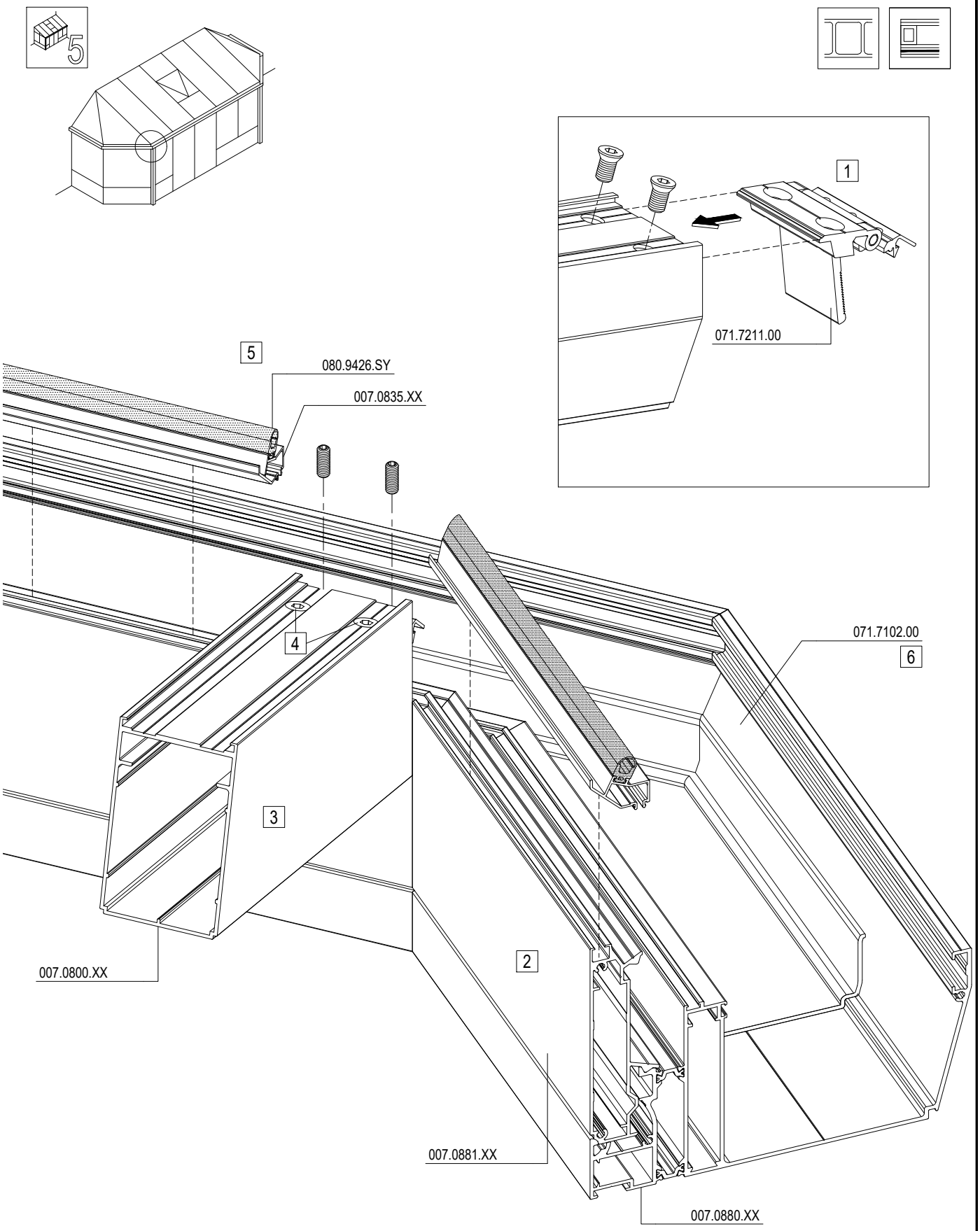

MONTAGEVOLGORDE
L 'ORDRE DE MONTAGE
THE ORDER OF ASSEMBLY
MONTAGEREIHENFOLGE

1 2 3 .

D0070146

F

NOK-GOOTVERBINDING
RACCORDEMENT FAITIERE-GOUTTIERE
RIDGE-GUTTER CONNECTION
FIRST-RINNENVERBINDUNG

D0070147

NOK-GOOTVERBINDING
RACCORDEMENT FAITIERE-GOUTTIERE
RIDGE-GUTTER CONNECTION
FIRST-RINNENVERBINDUNG

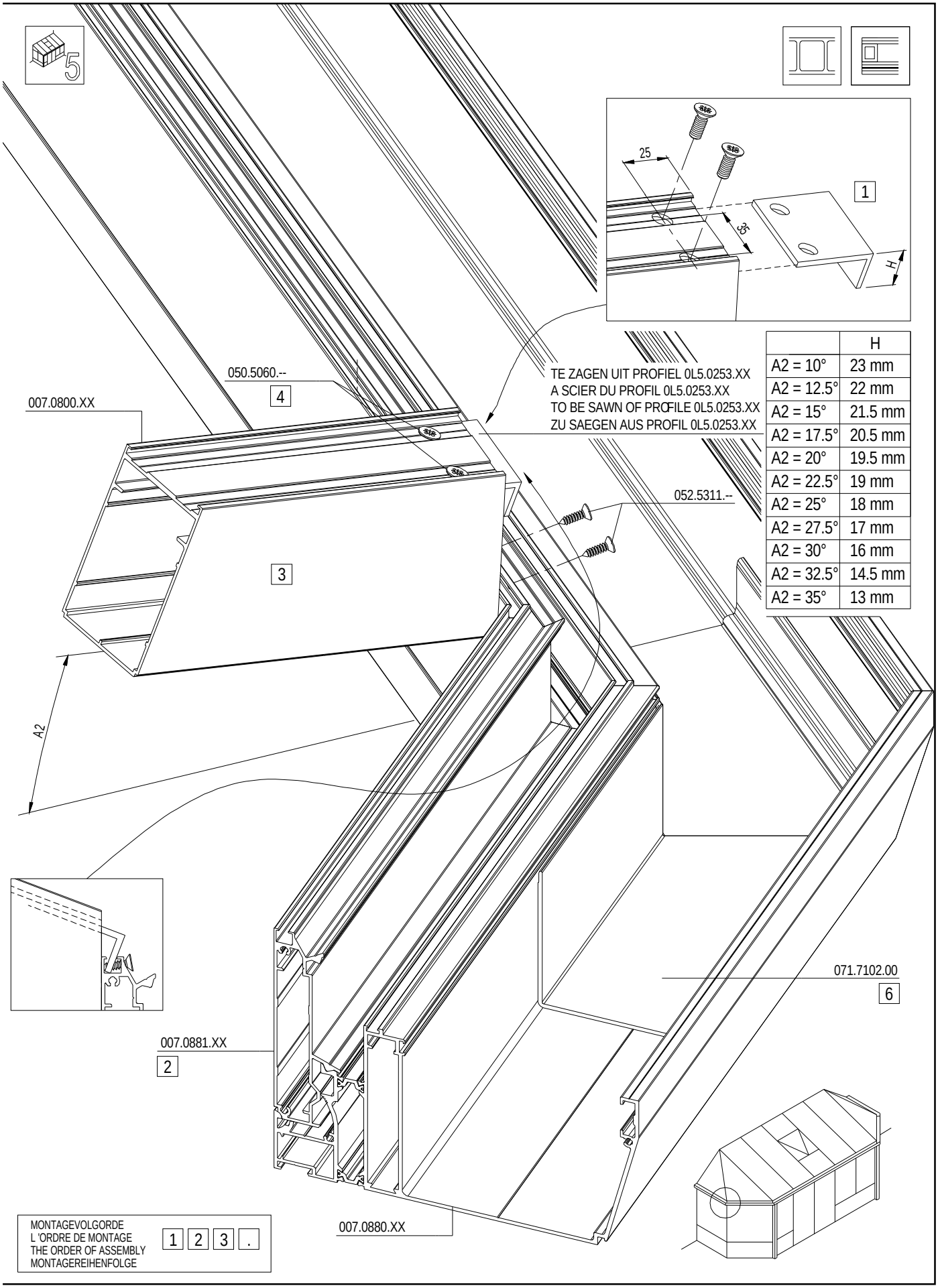

	H
A2 = 10°	23 mm
A2 = 12.5°	22 mm
A2 = 15°	21.5 mm
A2 = 17.5°	20.5 mm
A2 = 20°	19.5 mm
A2 = 22.5°	19 mm
A2 = 25°	18 mm
A2 = 27.5°	17 mm
A2 = 30°	16 mm
A2 = 32.5°	14.5 mm
A2 = 35°	13 mm

F

NOK-MUURVERBINDING
RACCORDEMENT FAITIERE-MUR
RIDGE-WALL CONNECTION
FIRST-WANDVERBINDUNG

D0070253

NOK-MUURVERBINDING
RACCORDEMENT FAITIERE-MUR
RIDGE-WALL CONNECTION
FIRST-WANDVERBINDUNG

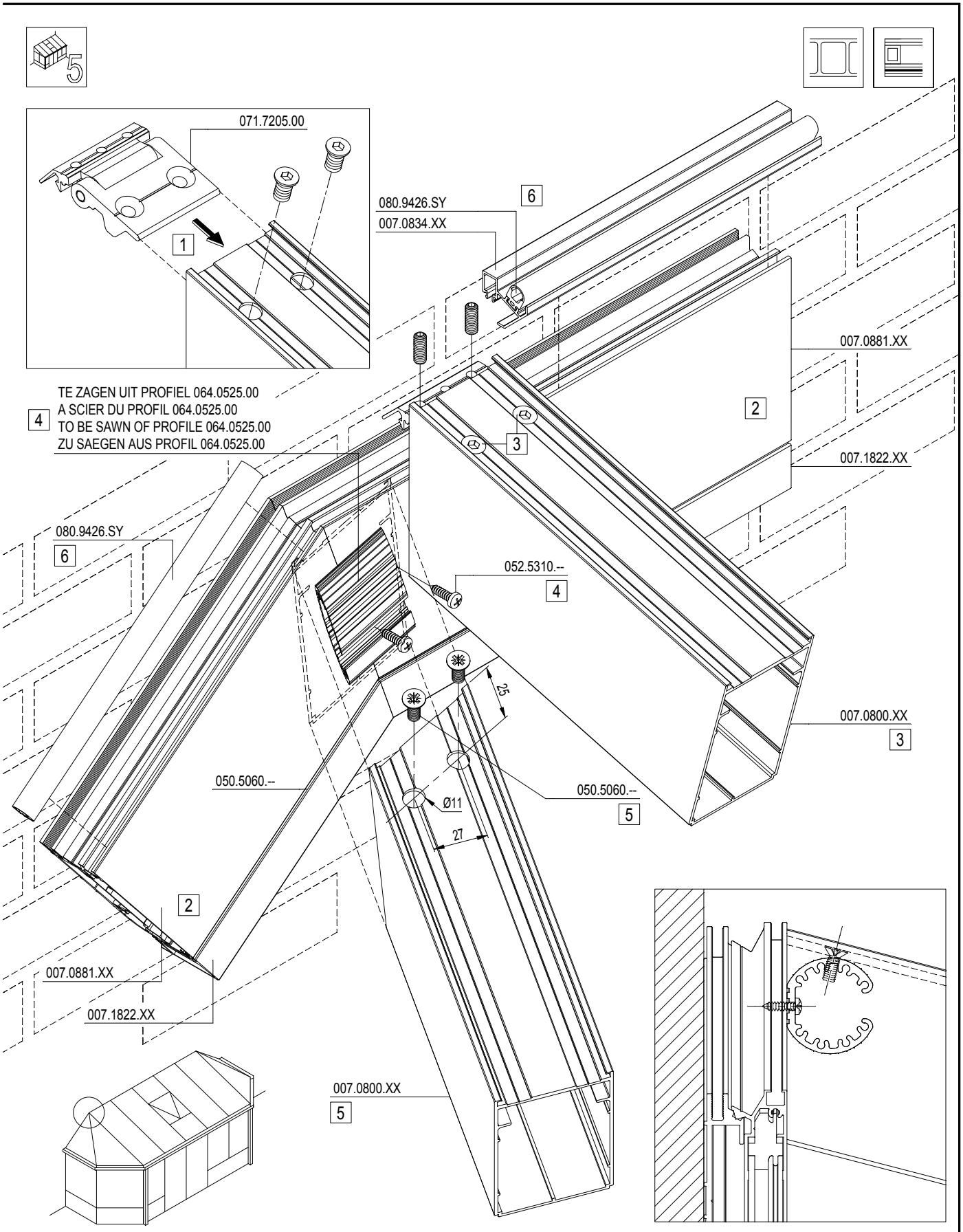

MONTAGEVOLGORDE L 'ORDRE DE MONTAGE THE ORDER OF ASSEMBLY MONTAGEREIHENFOLGE	1	2	3	.

D0070253

F

NOK-MUURVERBINDING
RACCORDEMENT FAITIERE-MUR
RIDGE-WALL CONNECTION
FIRST-WANDVERBINDUNG

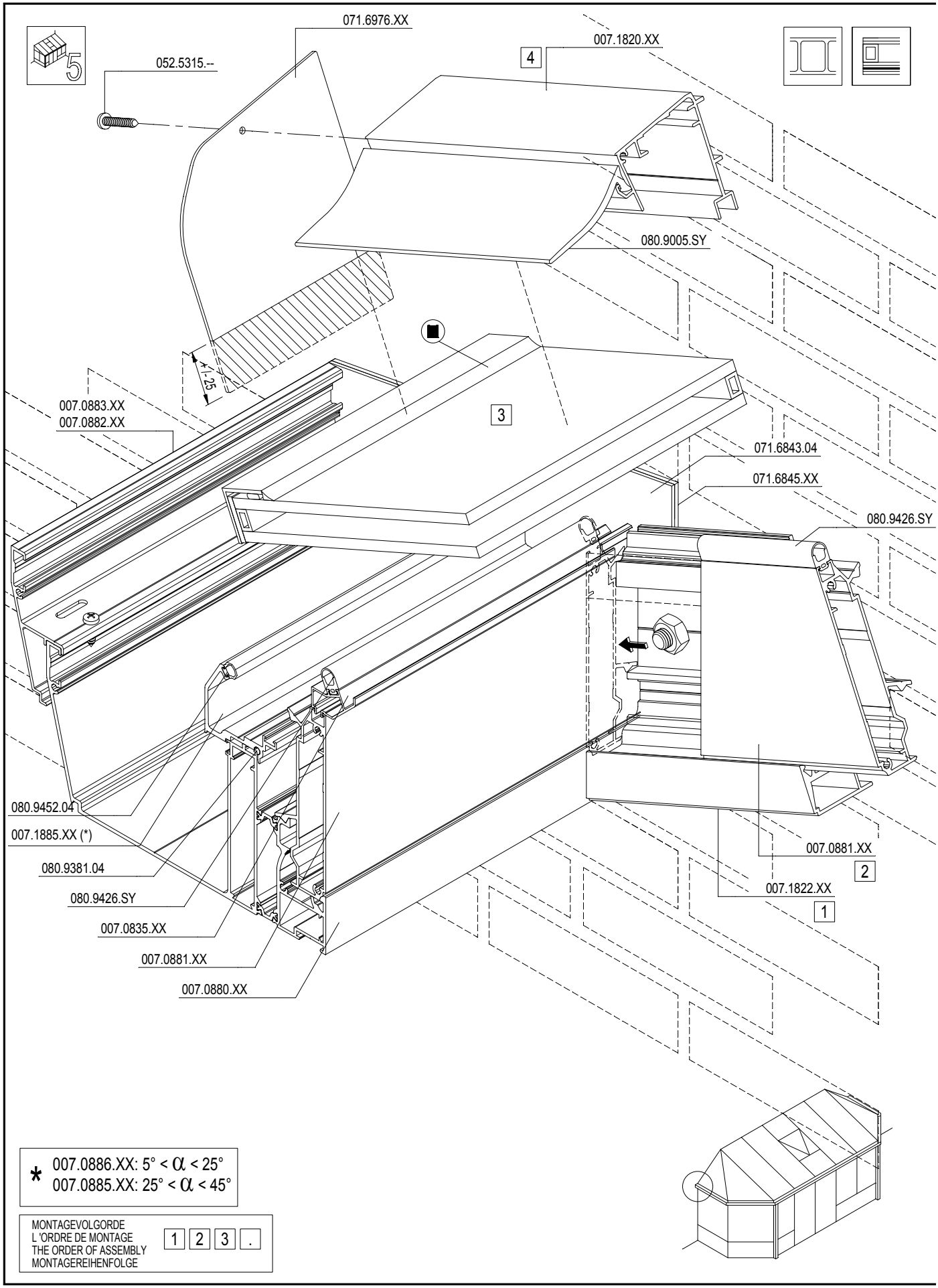

* 007.0886.XX: 5° < α < 25°
007.0885.XX: 25° < α < 45°

MONTAGEVOLGORDE
L'ORDRE DE MONTAGE
THE ORDER OF ASSEMBLY
MONTAGEREIHENFOLGE

1 2 3 .

F

B=60 cm / A3=45°

A1 = 25°	A2 = 33.3°	Dmax = 125 cm
A1 = 22.5°	A2 = 30°	Dmax = 145 cm
A1 = 20°	A2 = 26.4°	Dmax = 165 cm
A1 = 17.5°	A2 = 22.7°	Dmax = 190 cm
A1 = 15°	A2 = 19°	Dmax = 220 cm
A1 = 12.5°	A2 = 15.3°	Dmax = 270 cm
A1 = 10°	A2 = 11.8°	Dmax = 340 cm

B=70 cm / A3=45°

A1 = 25°	A2 = 33.3°	Dmax = 150 cm
A1 = 22.5°	A2 = 30°	Dmax = 165 cm
A1 = 20°	A2 = 26.4°	Dmax = 190 cm
A1 = 17.5°	A2 = 22.7°	Dmax = 220 cm
A1 = 15°	A2 = 19°	Dmax = 260 cm
A1 = 12.5°	A2 = 15.3°	Dmax = 315 cm
A1 = 10°	A2 = 11.8°	Dmax = 395 cm

B=80 cm / A3=45°

A1 = 25°	A2 = 33.3°	Dmax = 170 cm
A1 = 22.5°	A2 = 30°	Dmax = 190 cm
A1 = 20°	A2 = 26.4°	Dmax = 220 cm
A1 = 17.5°	A2 = 22.7°	Dmax = 250 cm
A1 = 15°	A2 = 19°	Dmax = 295 cm
A1 = 12.5°	A2 = 15.3°	Dmax = 360 cm
A1 = 10°	A2 = 11.8°	Dmax = 455 cm

B=90 cm / A3=45°

A1 = 25°	A2 = 33.3°	Dmax = 190 cm
A1 = 22.5°	A2 = 30°	Dmax = 215 cm
A1 = 20°	A2 = 26.4°	Dmax = 245 cm
A1 = 17.5°	A2 = 22.7°	Dmax = 285 cm
A1 = 15°	A2 = 19°	Dmax = 335 cm
A1 = 12.5°	A2 = 15.3°	Dmax = 405 cm
A1 = 10°	A2 = 11.8°	-

B=100 cm / A3=45°

A1 = 25°	A2 = 33.3°	Dmax = 215 cm
A1 = 22.5°	A2 = 30°	Dmax = 240 cm
A1 = 20°	A2 = 26.4°	Dmax = 275 cm
A1 = 17.5°	A2 = 22.7°	Dmax = 315 cm
A1 = 15°	A2 = 19°	Dmax = 370 cm
A1 = 12.5°	A2 = 15.3°	Dmax = 450 cm
A1 = 10°	A2 = 11.8°	-

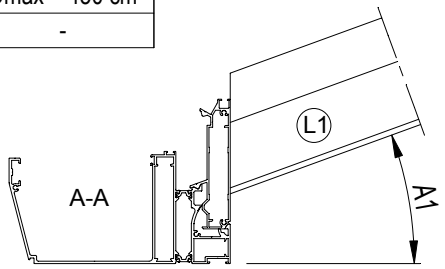

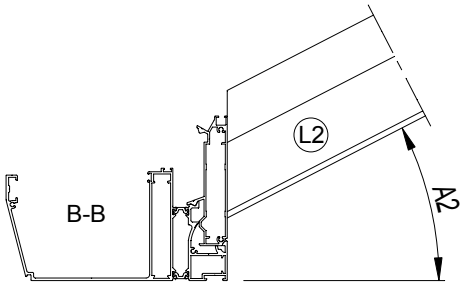

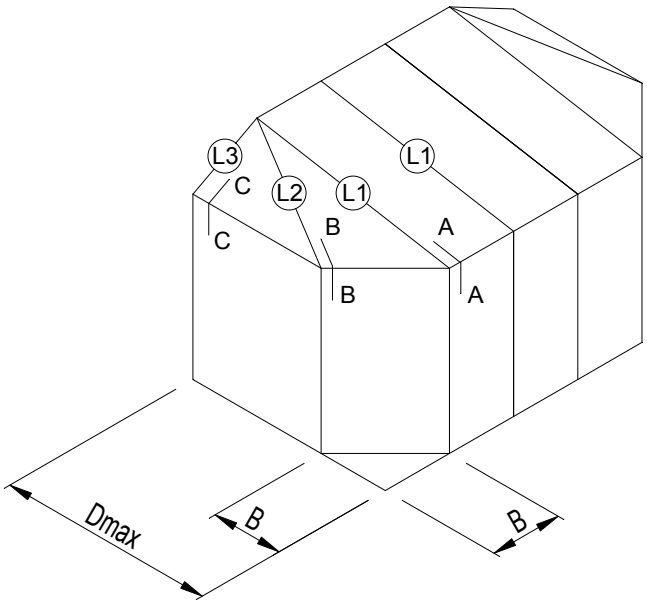

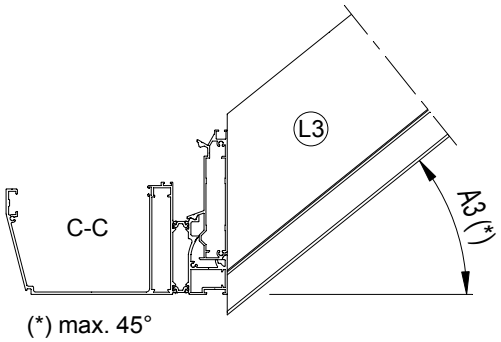

(*) max. 45°

D0070254

F

INBOUW DAKRAAM
ENCASTREMENT TABATIERE
EMBEDDING ATTIC WINDOW
EINBAU DACHFENSTER

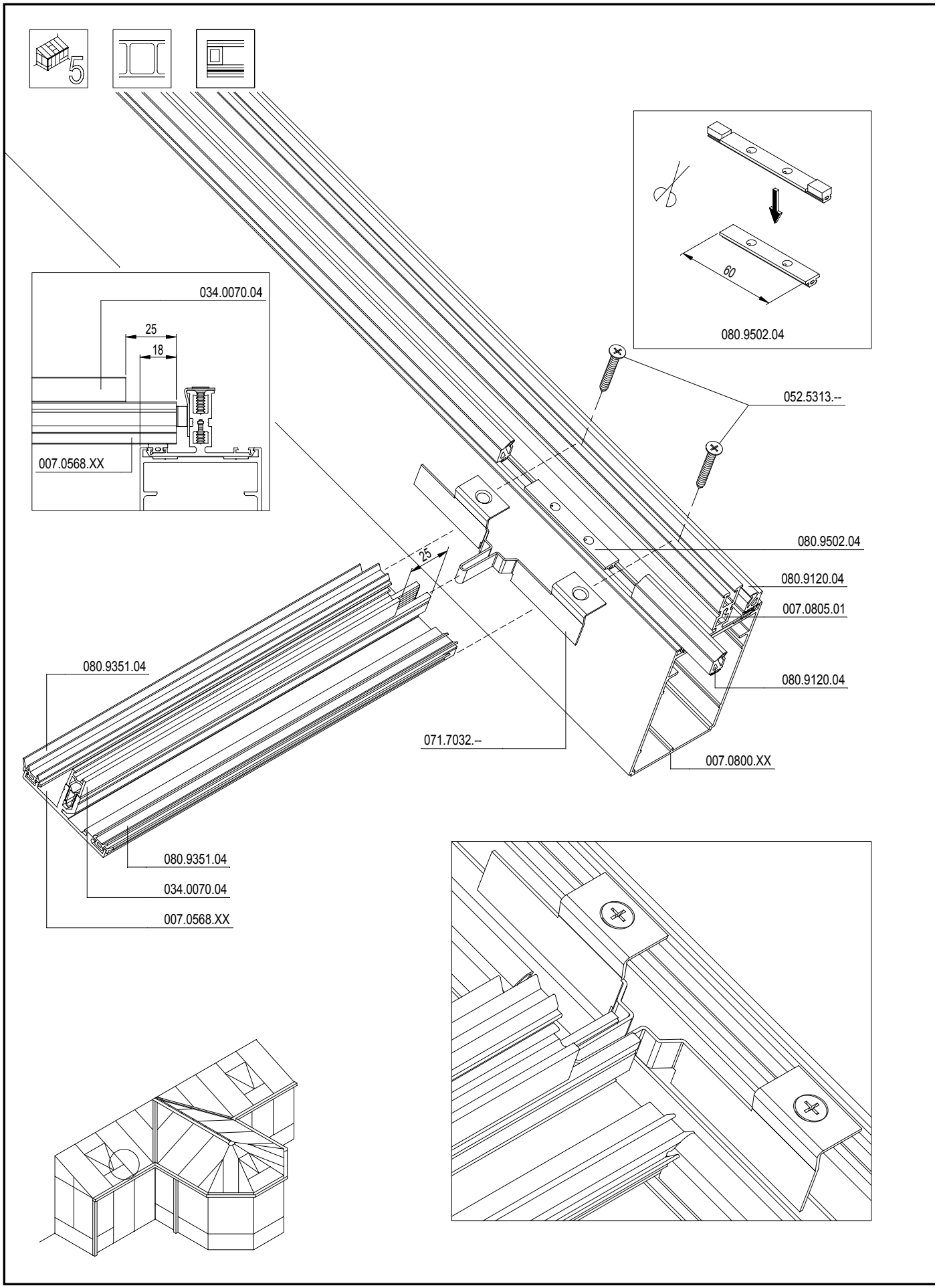

INBOUW DAKRAAM
ENCASTREMENT TABATIERE
EMBEDDING ATTIC WINDOW
EINBAU DACHFENSTER

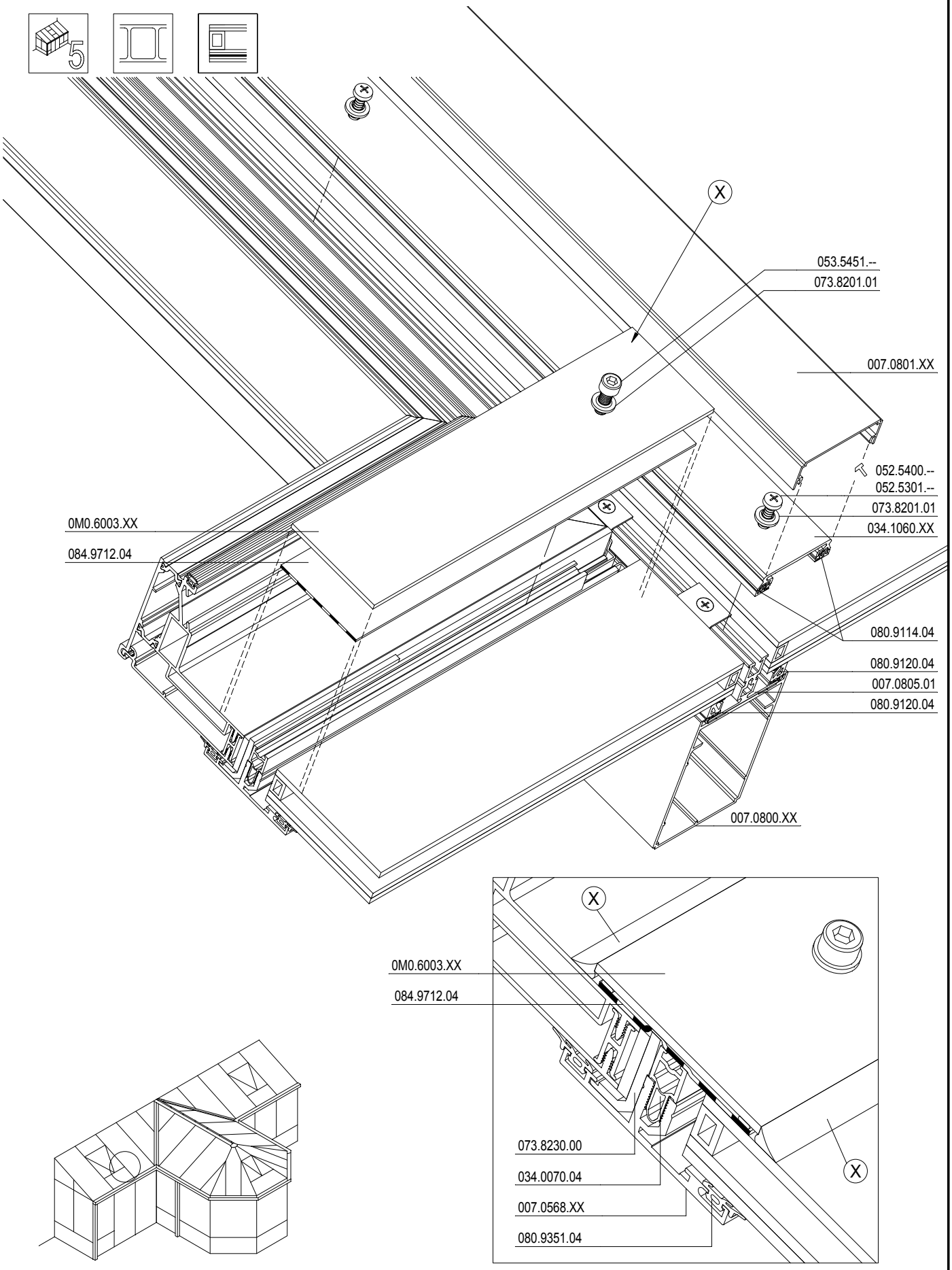

F

D0070192

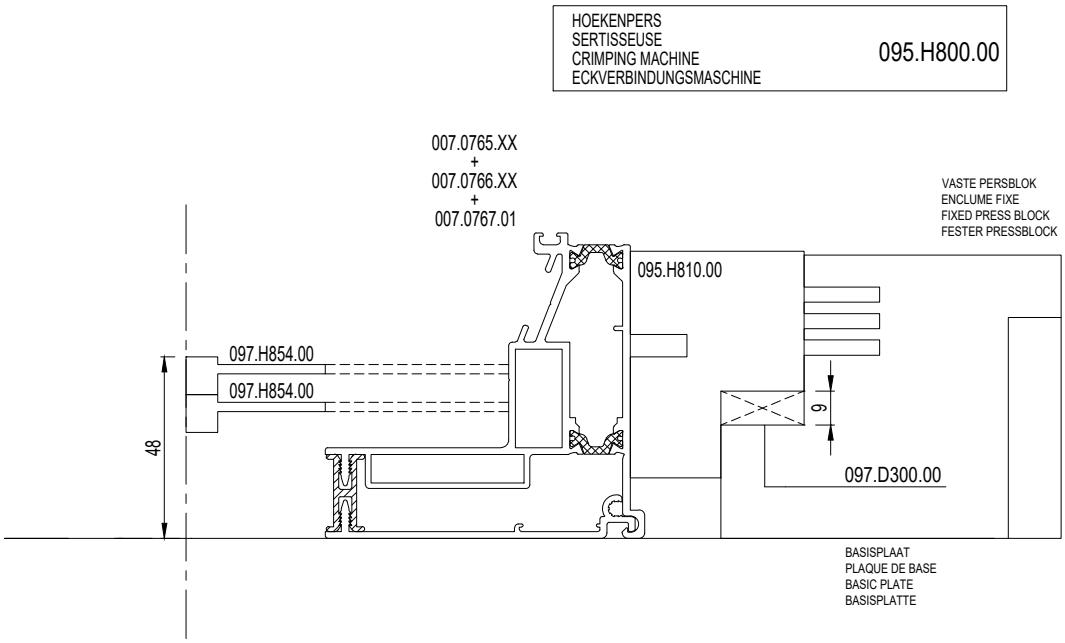
HOEKENPERS
SERTISSEUSE
CRIMPING MACHINE
ECKVERBINDUNGSMASCHINE
095.H800.00
007.0765.XX
+
007.0766.XX
+
007.0767.01
VASTE PERSBLOK
ENCLUME FIXE
FIXED PRESS BLOCK
FESTER PRESSBLOCK
095.H810.00
097.H854.00
097.H854.00
48
9
097.D300.00
BASISPLAAT
PLAQUE DE BASE
BASIC PLATE
BASISPLATTE

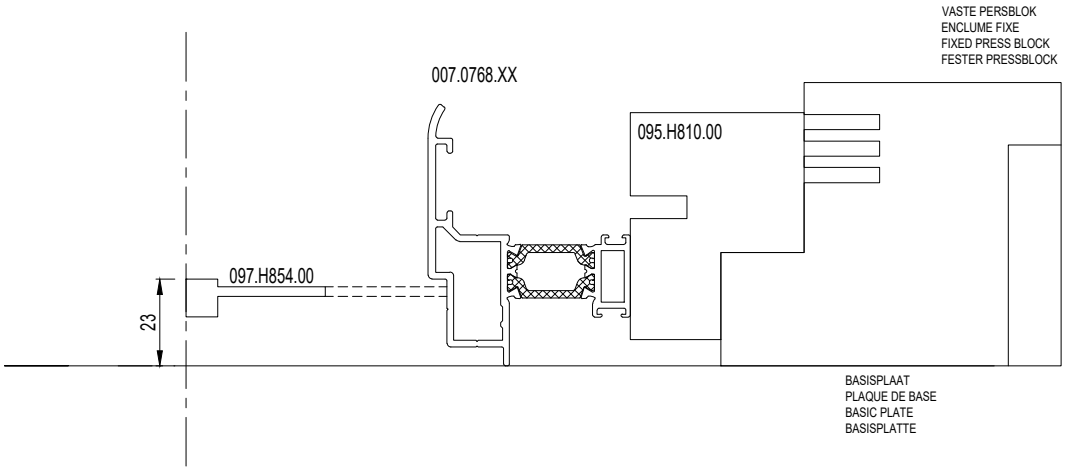
VASTE PERSBLOK
ENCLUME FIXE
FIXED PRESS BLOCK
FESTER PRESSBLOCK
007.0768.XX
095.H810.00
097.H854.00
23
BASISPLAAT
PLAQUE DE BASE
BASIC PLATE
BASISPLATTE

F

D0004401

HOEKENPERS
SERTISSEUSE
CRIMPING MACHINE
ECKVERBINDUNGSMASCHINE
095.B500.00

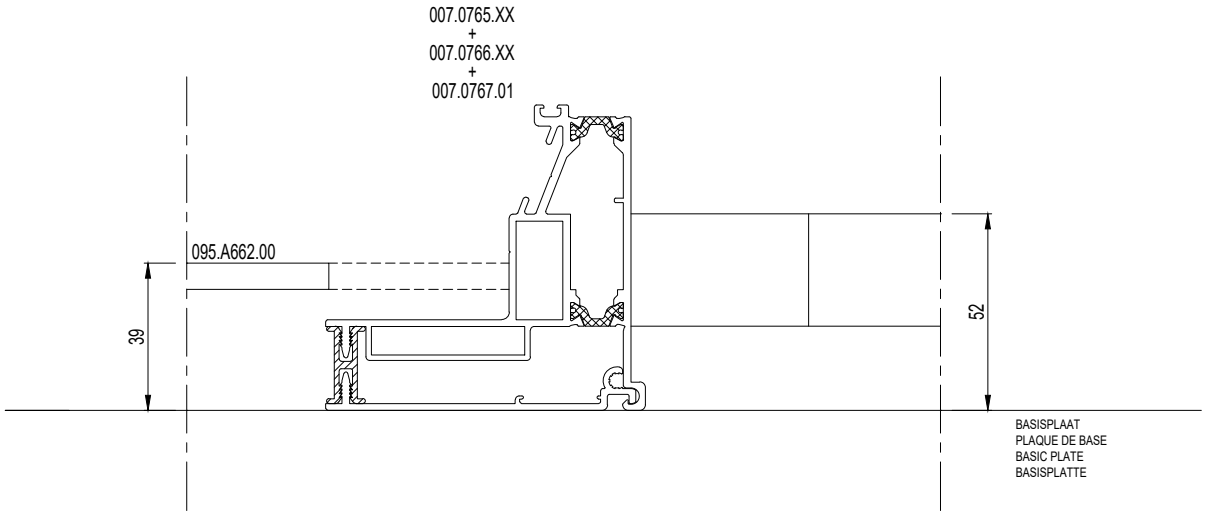

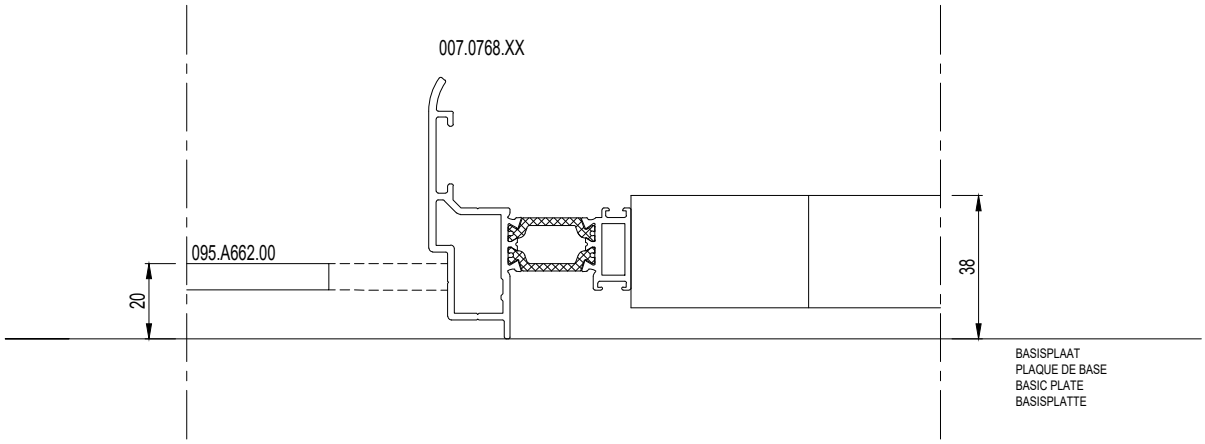

F

D0004401

BUITENKADER DAKRAAM
DORMANT TABATIERE
OUTER FRAME ATTIC WINDOW
BLENDRAHMEN DACHFENSTER

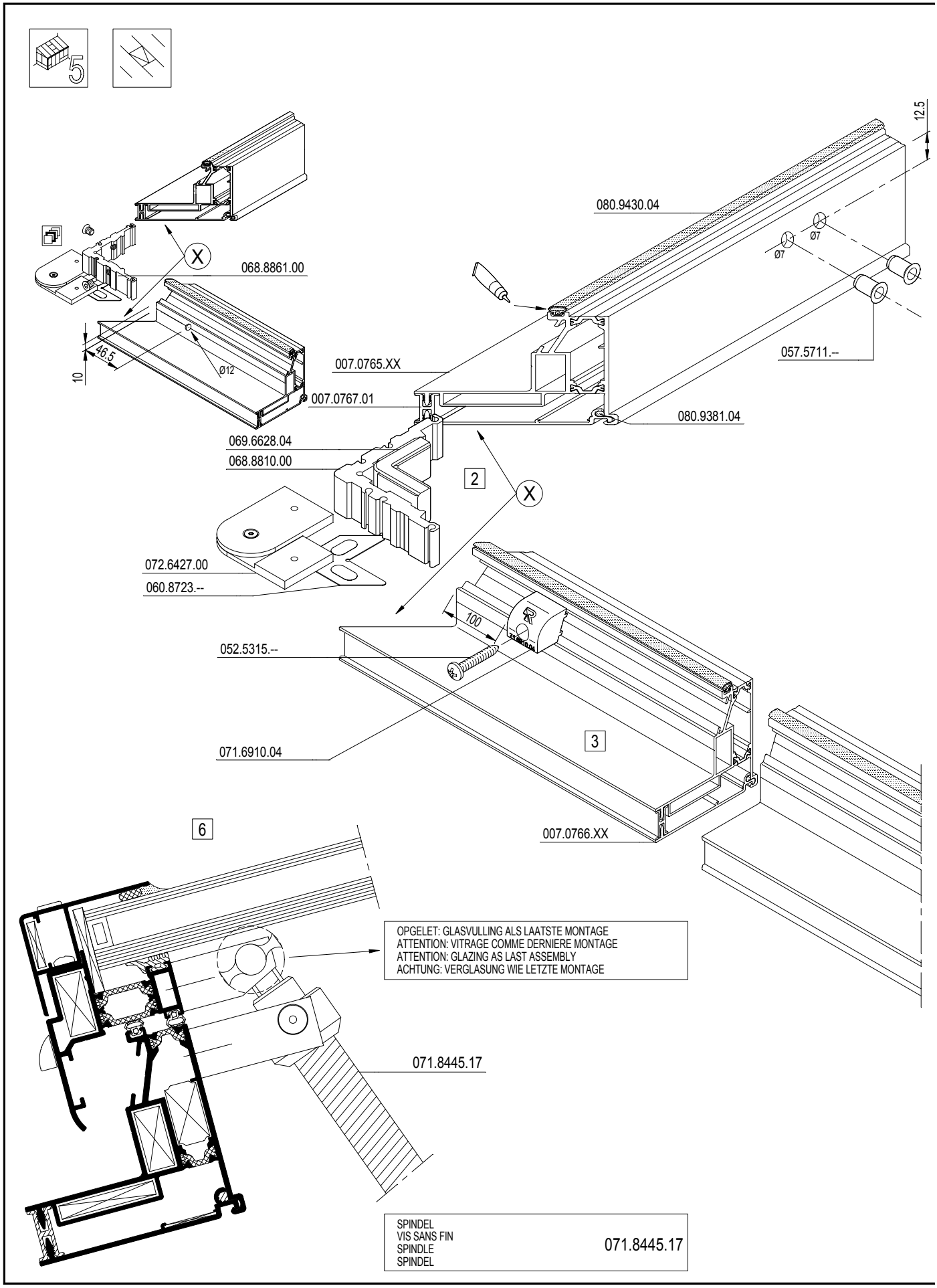

F

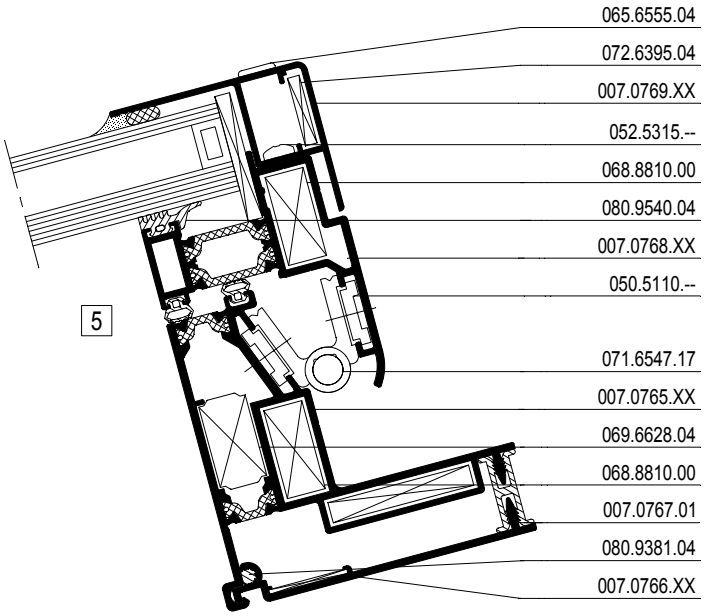

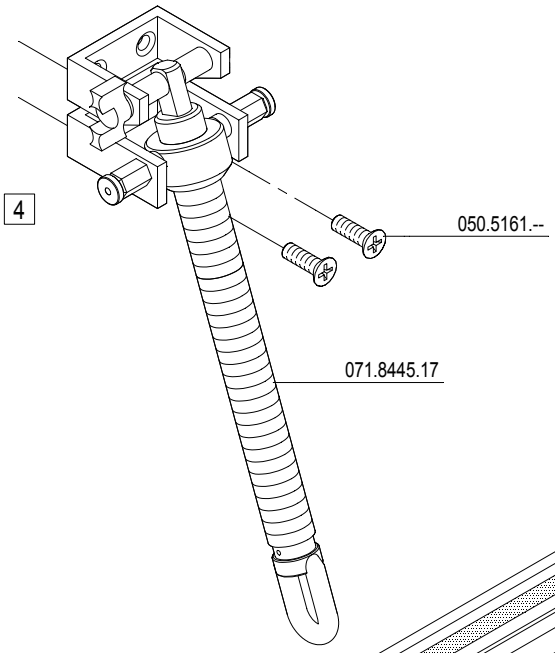

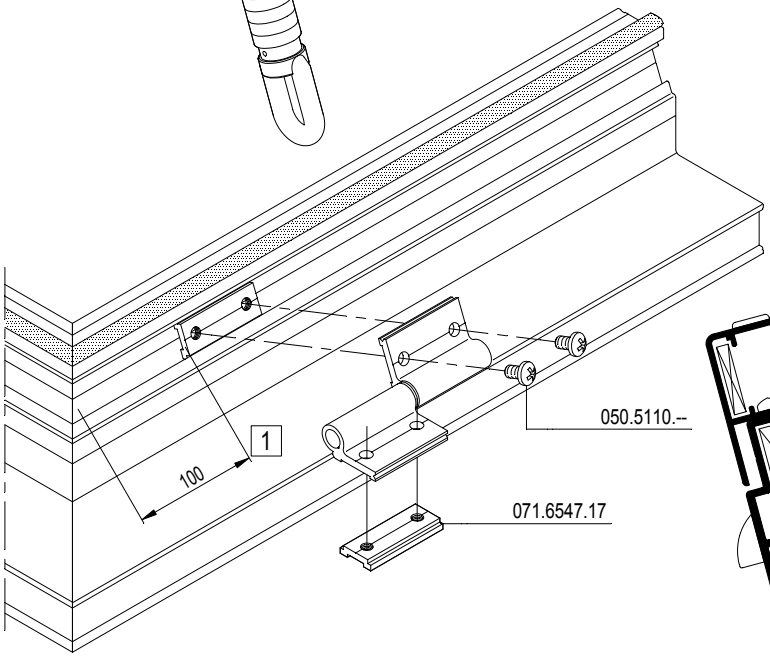

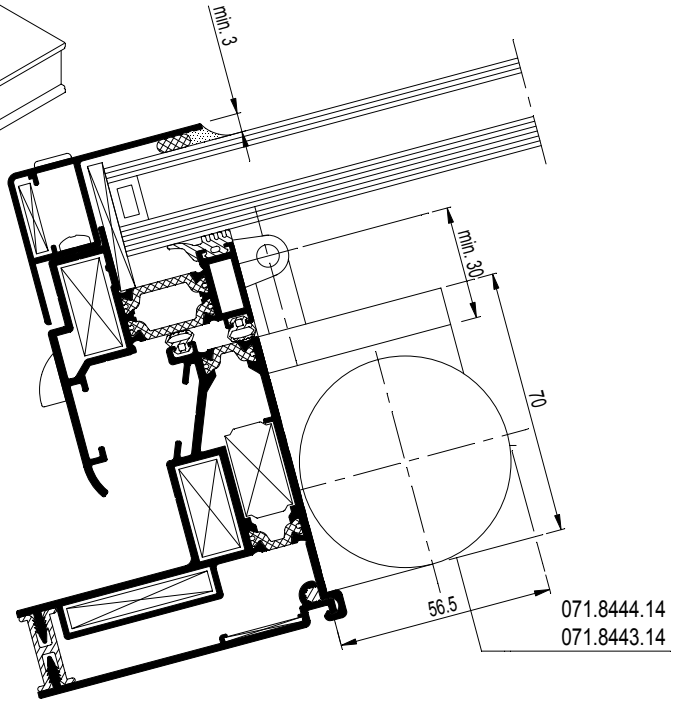

KETTINGMOTOR MOTEUR ELECTRIQUE CHAIN MOTOR KETTENANTRIEB	071.8443.14 of - ou - or - oder 071.8444.14

F

D0070193

D0041292

BUITENKADER DAKRAAM
DORMANT TABATIERE
OUTER FRAME ATTIC WINDOW
BLENDRAHMEN DACHFENSTER

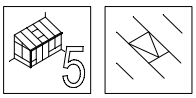

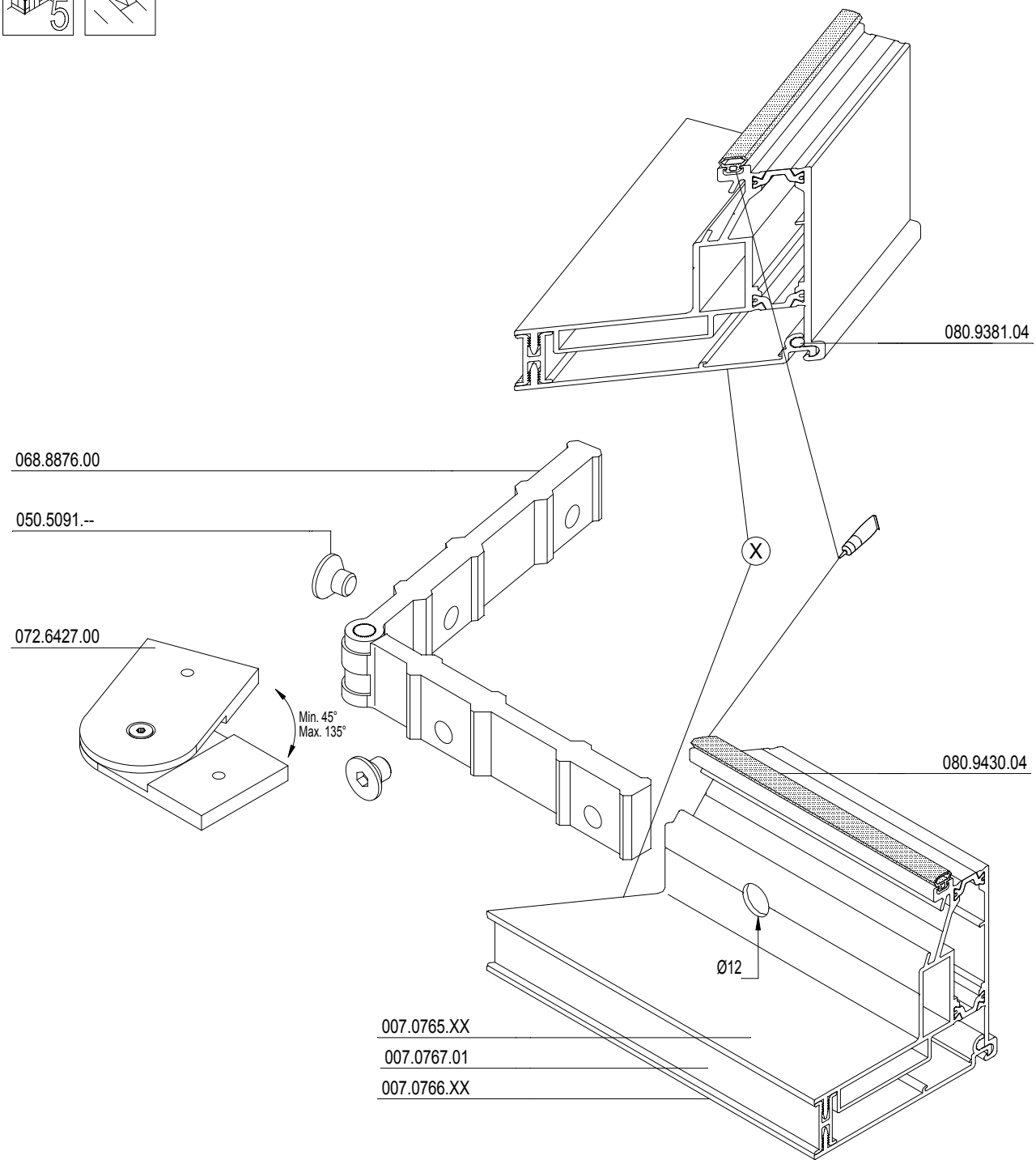

BOORMAL CALIBRE DE PERÇAGE BORING JIG BOHRLEHRE	097.0429.00

F

D0041292

VLEUGEL DAKRAAM
OUVRANT TABATIERE
VENT ATTIC WINDOW
FLUEGEL DACHFENSTER

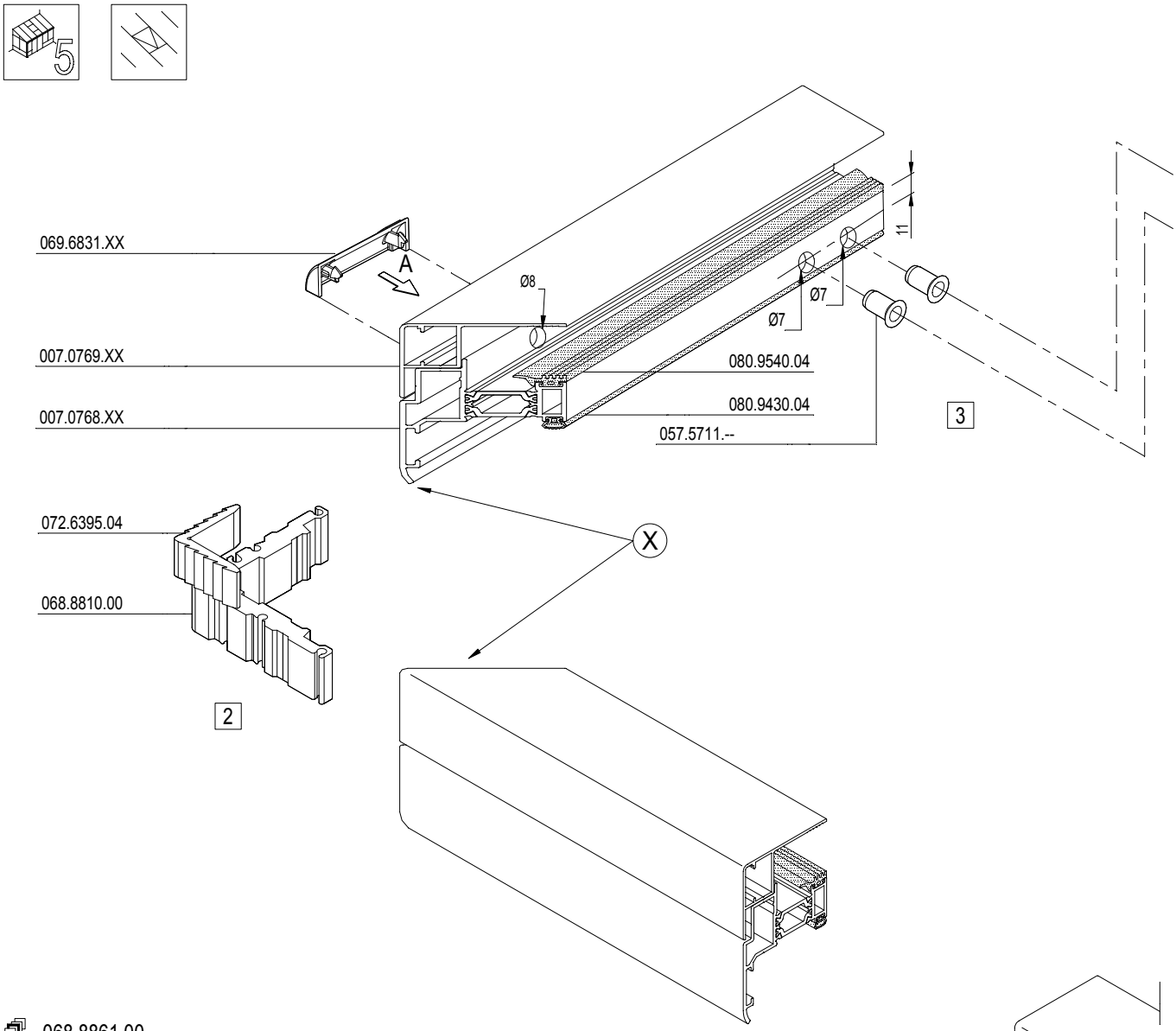

068.8861.00

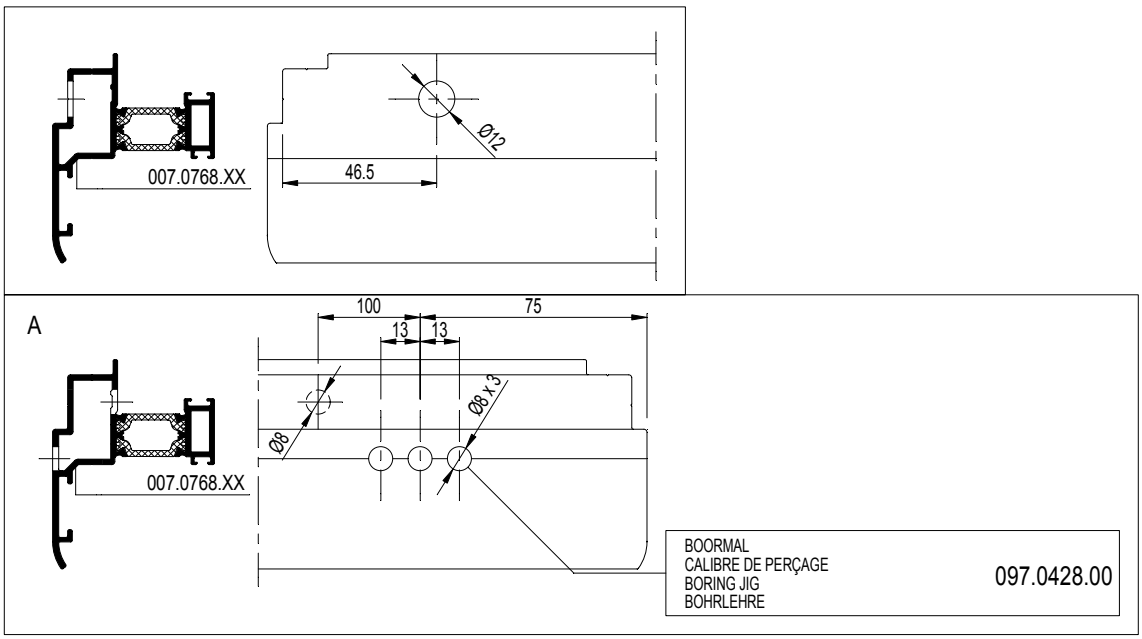

D0070255

F

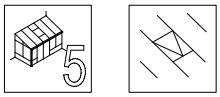

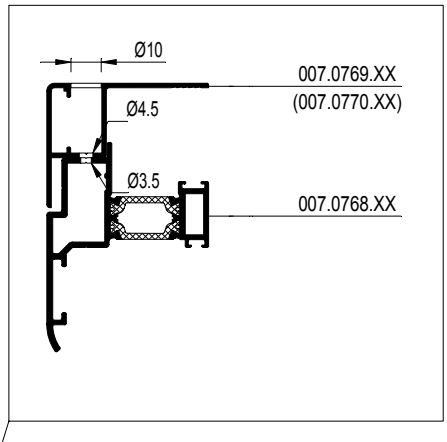

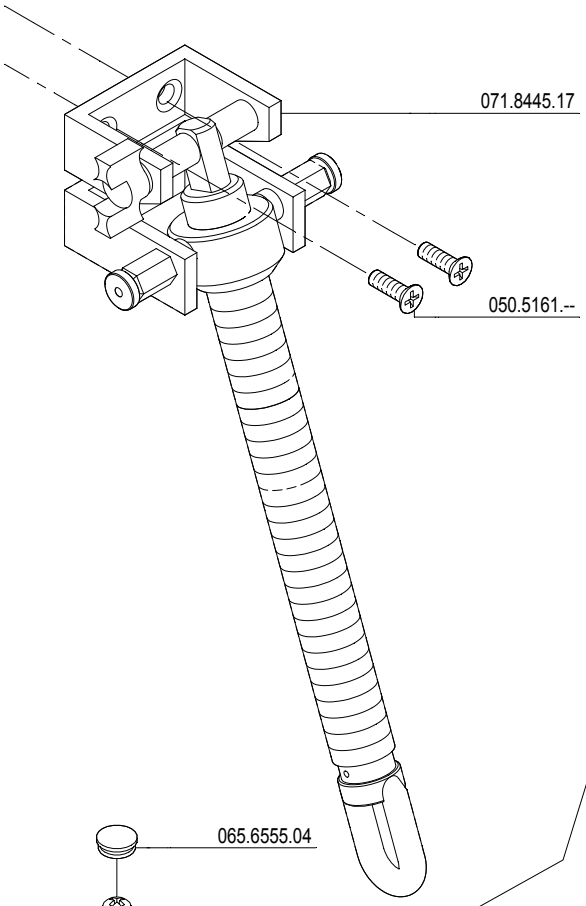

OPGELET: GLASVULLING ALS LAATSTE MONTAGE
ATTENTION: VITRAGE COMME DERNIERE MONTAGE
ATTENTION: GLAZING AS LAST ASSEMBLY
ACHTUNG: VERGLASUNG WIE LETZTE MONTAGE

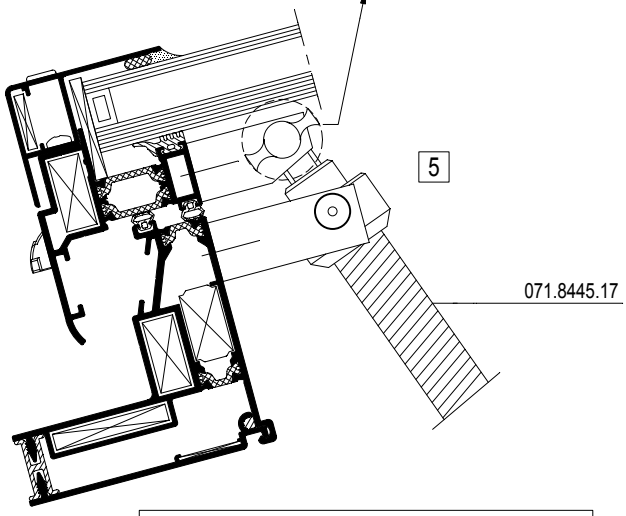

SPINDEL
VIS SANS FIN
SPINDLE
SPINDEL
071.8445.17

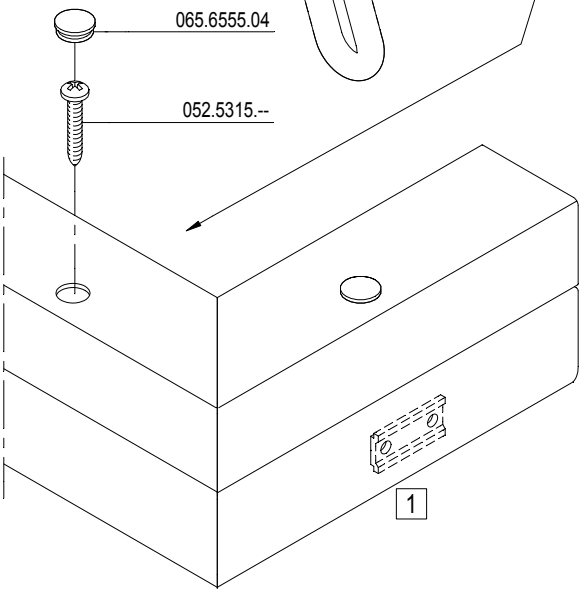

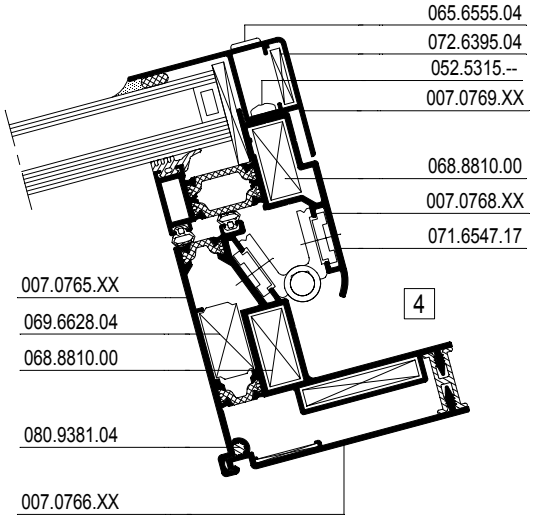

F

D0070255

F

D0004404

VLEUGEL DAKRAAM
OUVRANT TABATIERE
VENT ATTIC WINDOW
FLUEGEL DACHFENSTER

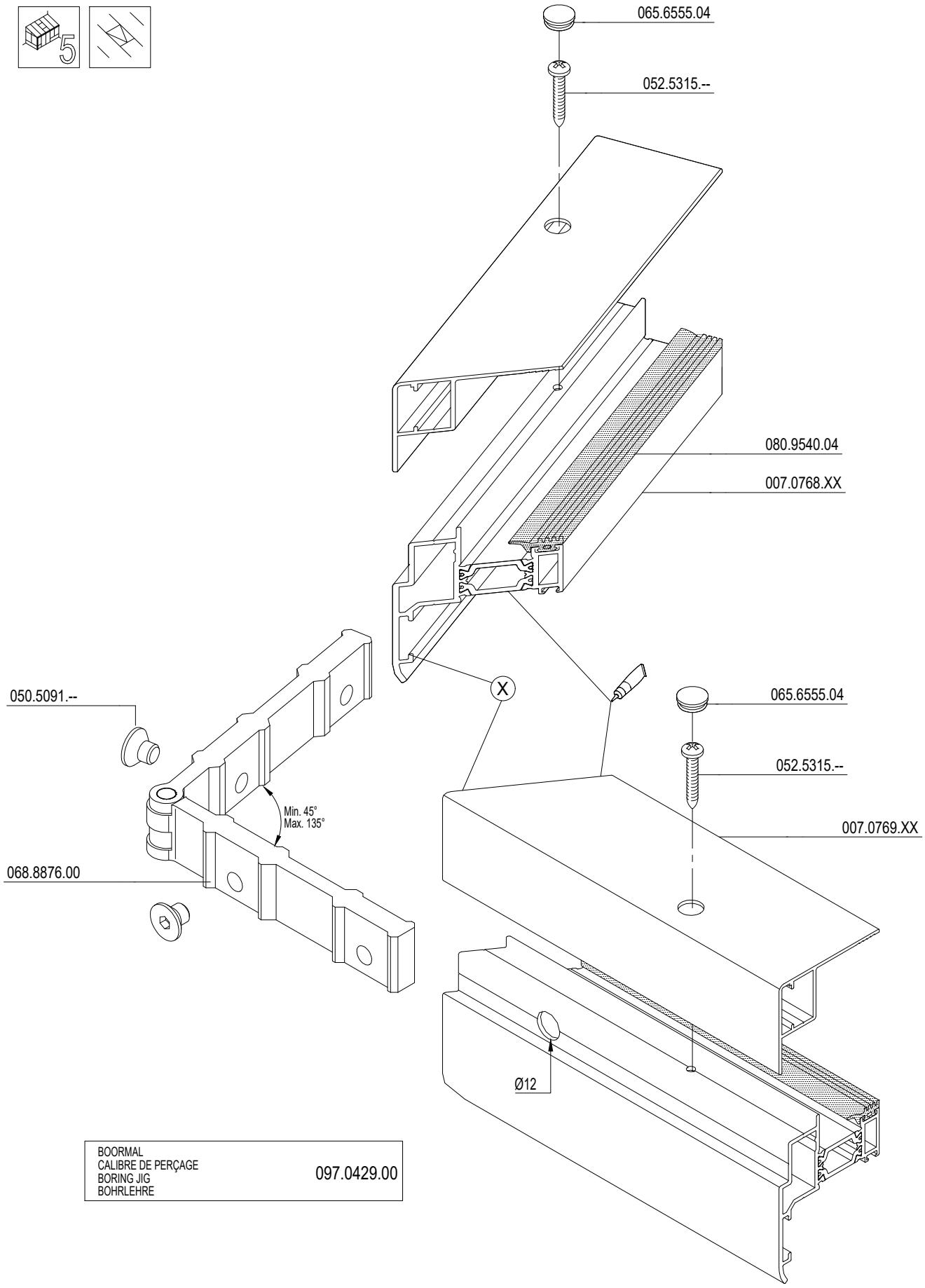

BOORMAL CALIBRE DE PERÇAGE BORING JIG BOHRLEHRE	097.0429.00

F

D0004404

BEKLEDINGS- EN DILATATIEPROFIEL
PROFIL DE REVETEMENT ET DE DILATATION
COVER AND EXPANSION PROFILE
BEKLEIDUNGS- UND AUSDEHNUNGSPROFIL

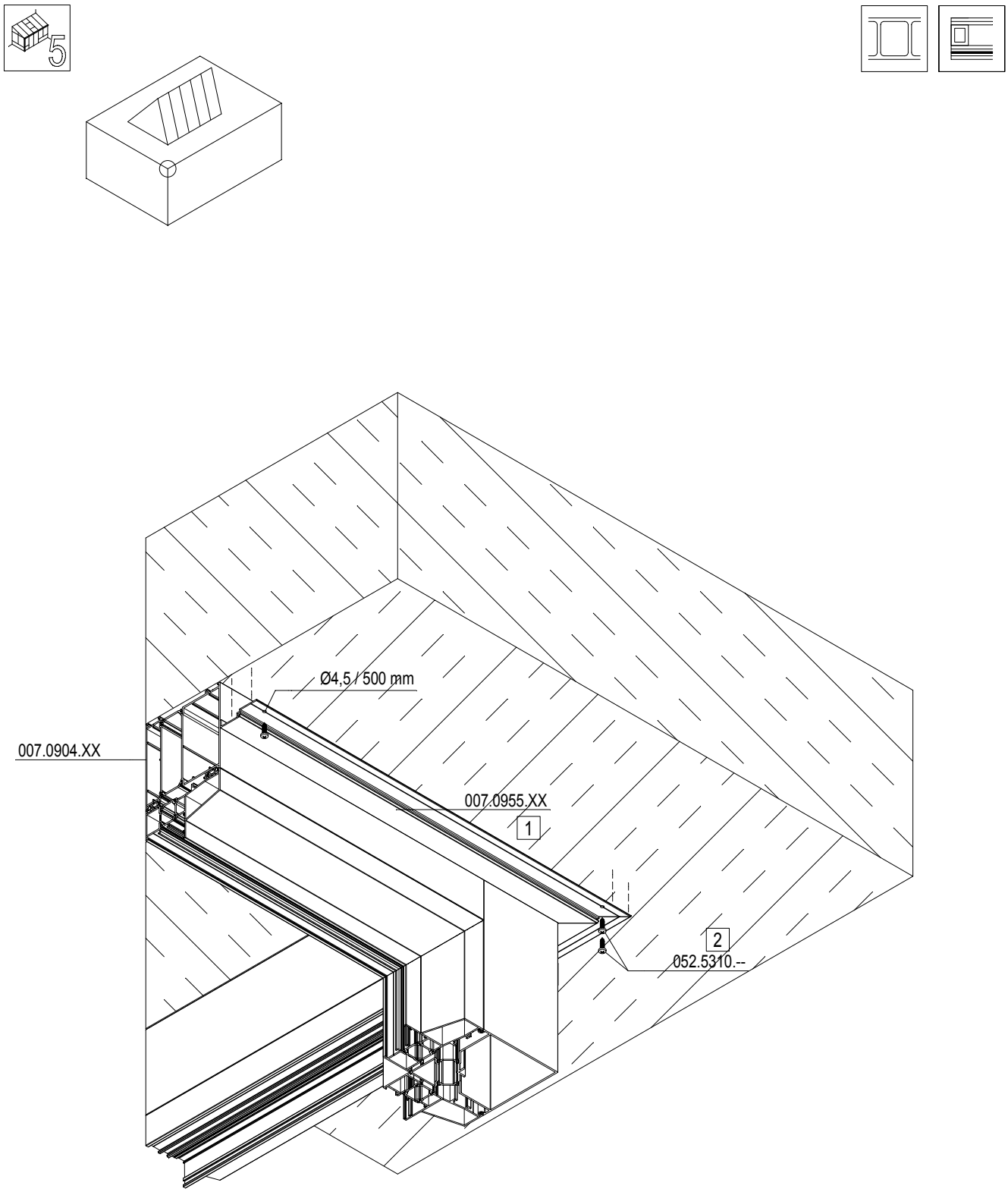

MONTAGEVOLGORDE L 'ORDRE DE MONTAGE THE ORDER OF ASSEMBLY MONTAGEREIHENFOLGE	1	2	3	.

D2001552

BEKLEDINGS- EN DILATATIEPROFIEL
PROFIL DE REVETEMENT ET DE DILATATION
COVER AND EXPANSION PROFILE
BEKLEIDUNGS- UND AUSDEHNUNGSPROFIL

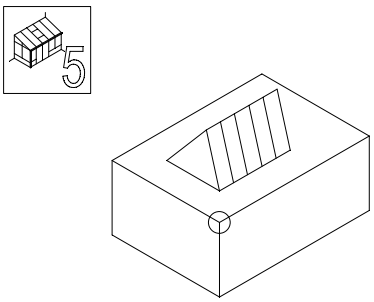

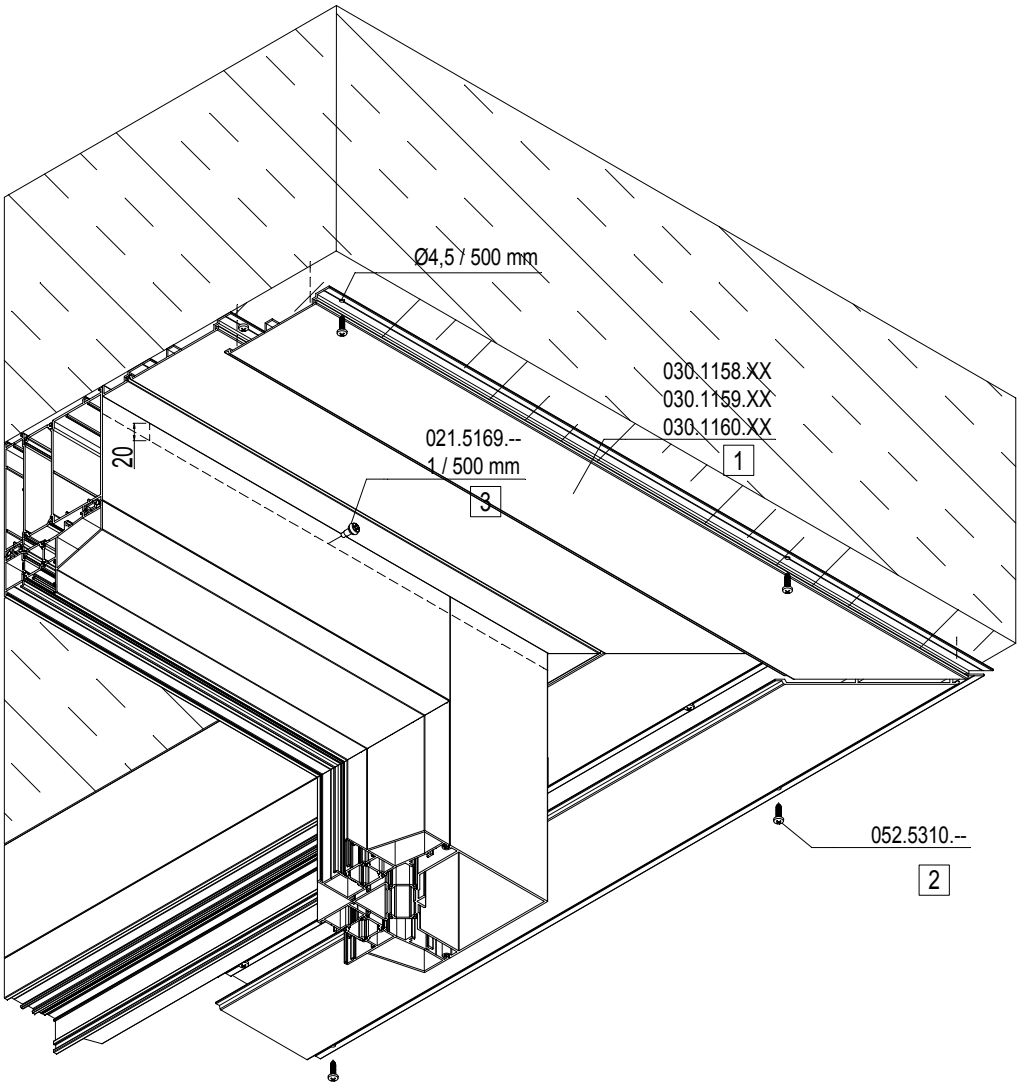

F

D200552

BEKLEDINGS- EN DILATATIEPROFIEL
PROFIL DE REVETEMENT ET DE DILATATION
COVER AND EXPANSION PROFILE
BEKLEIDUNGS- UND AUSDEHNUNGSPROFIL

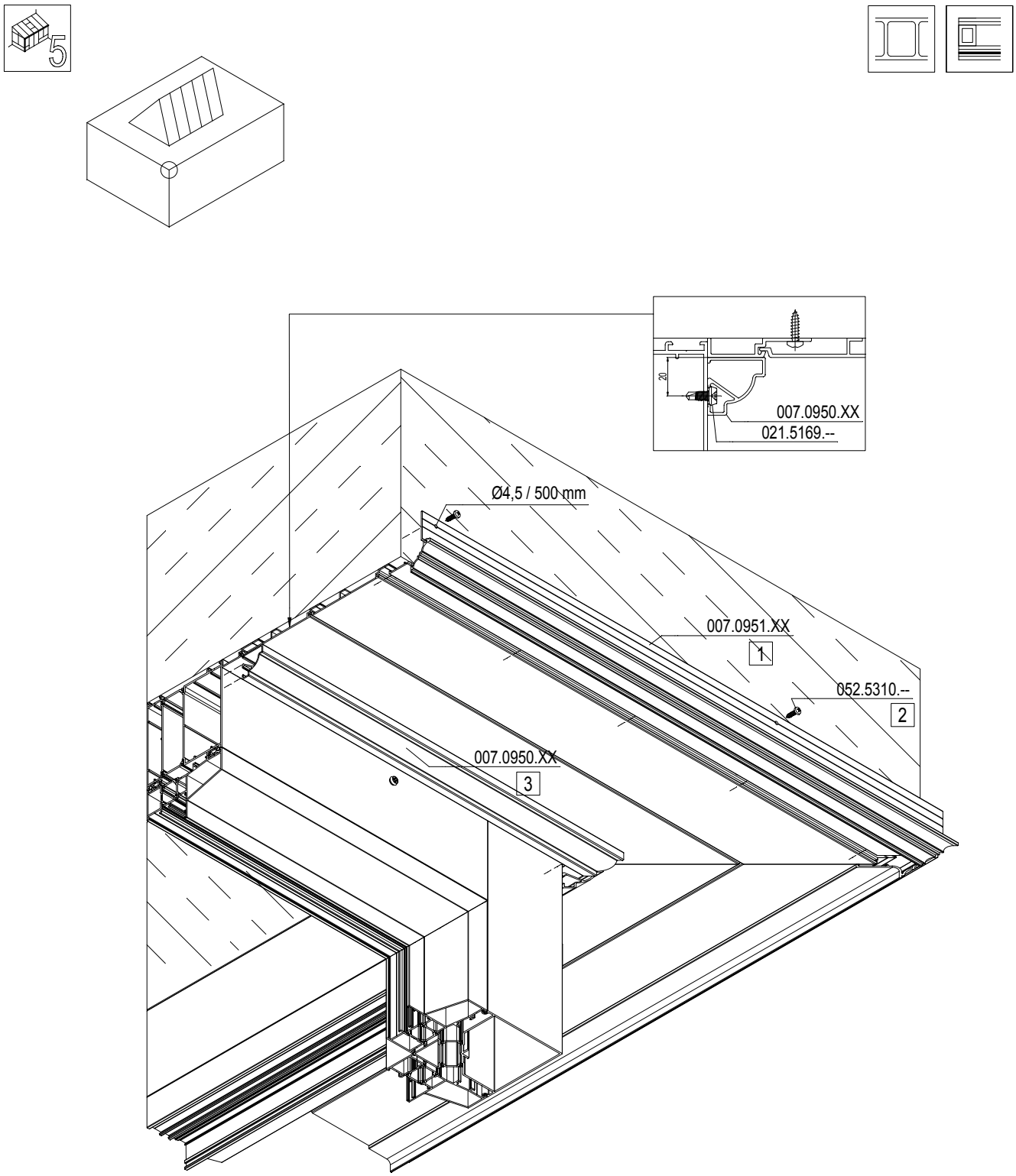

MONTAGEVOLGORDE L 'ORDRE DE MONTAGE THE ORDER OF ASSEMBLY MONTAGEREIHENFOLGE	1	2	3	.

D2001553

BEKLEDINGS- EN DILATATIEPROFIEL
PROFIL DE REVETEMENT ET DE DILATATION
COVER AND EXPANSION PROFILE
BEKLEIDUNGS- UND AUSDEHNUNGSPROFIL

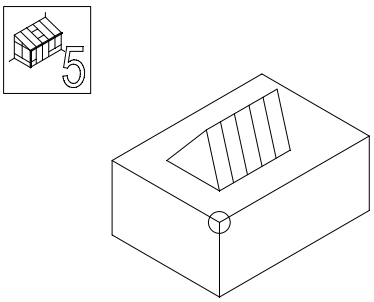

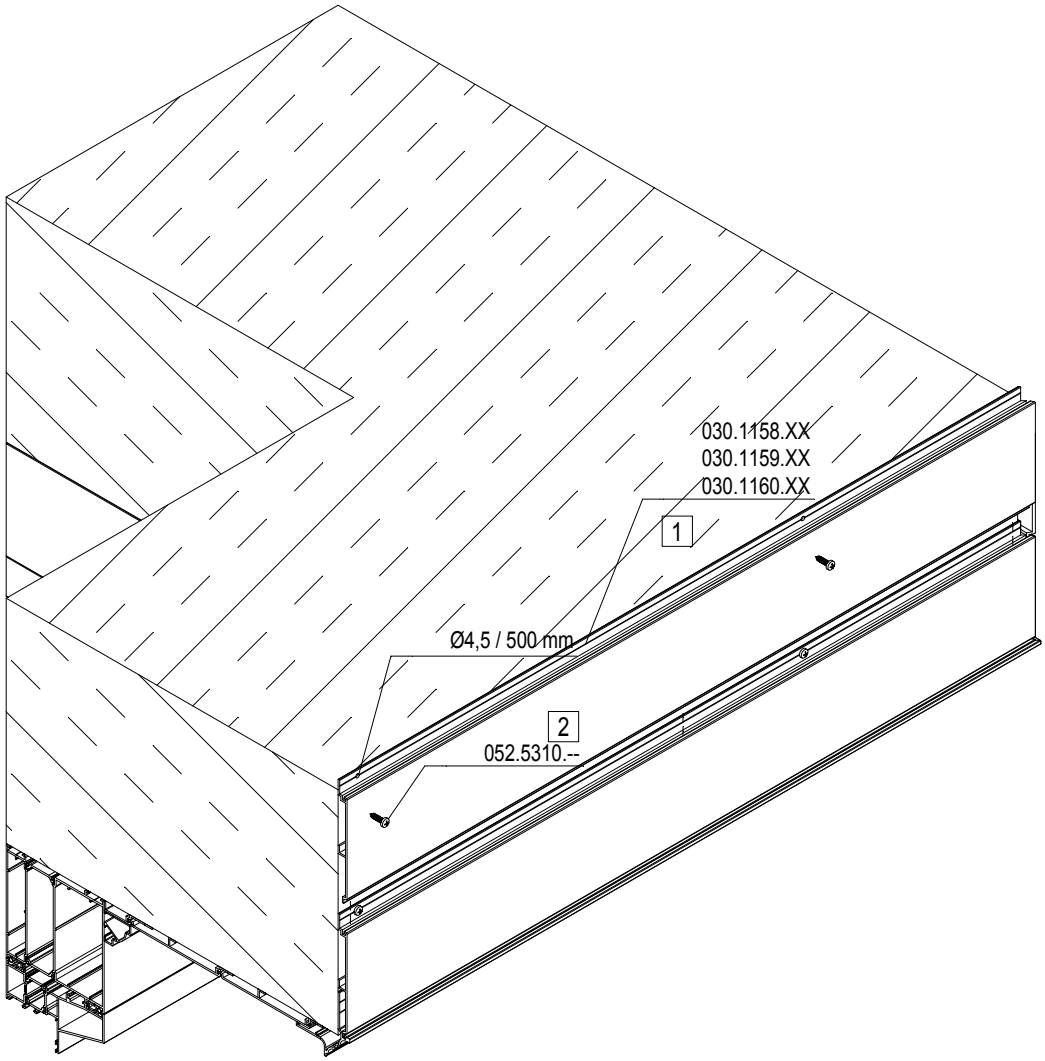

F

D2001553

BEKLEDINGS- EN DILATATIEPROFIEL
PROFIL DE REVETEMENT ET DE DILATATION
COVER AND EXPANSION PROFILE
BEKLEIDUNGS- UND AUSDEHNUNGSPROFIL

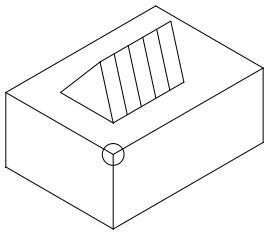

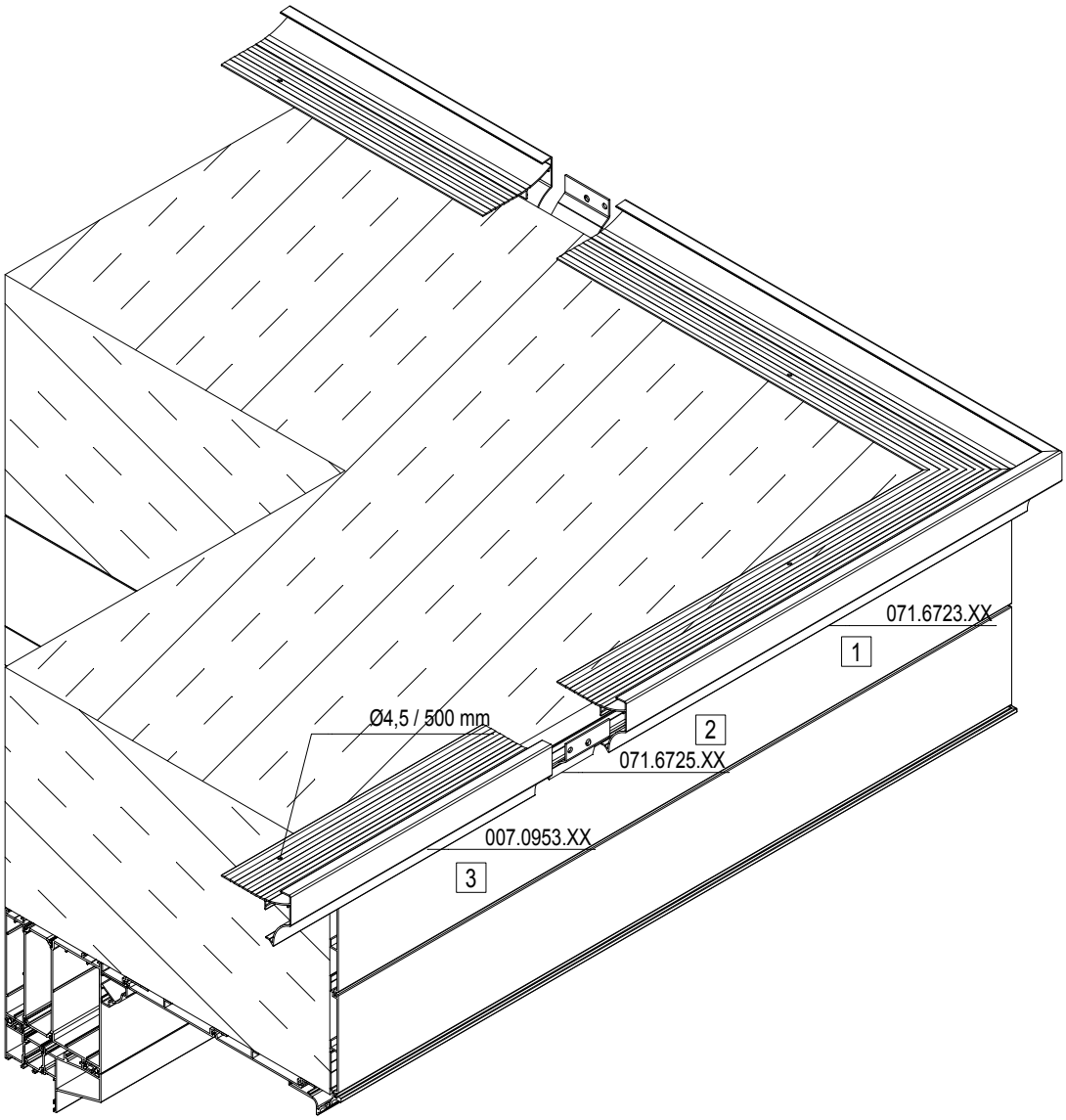

MONTAGEVOLGORDE L 'ORDRE DE MONTAGE THE ORDER OF ASSEMBLY MONTAGEREIHENFOLGE	1	2	3	.

D2001554

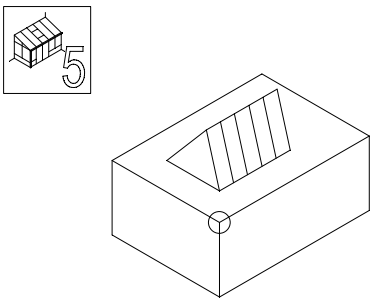

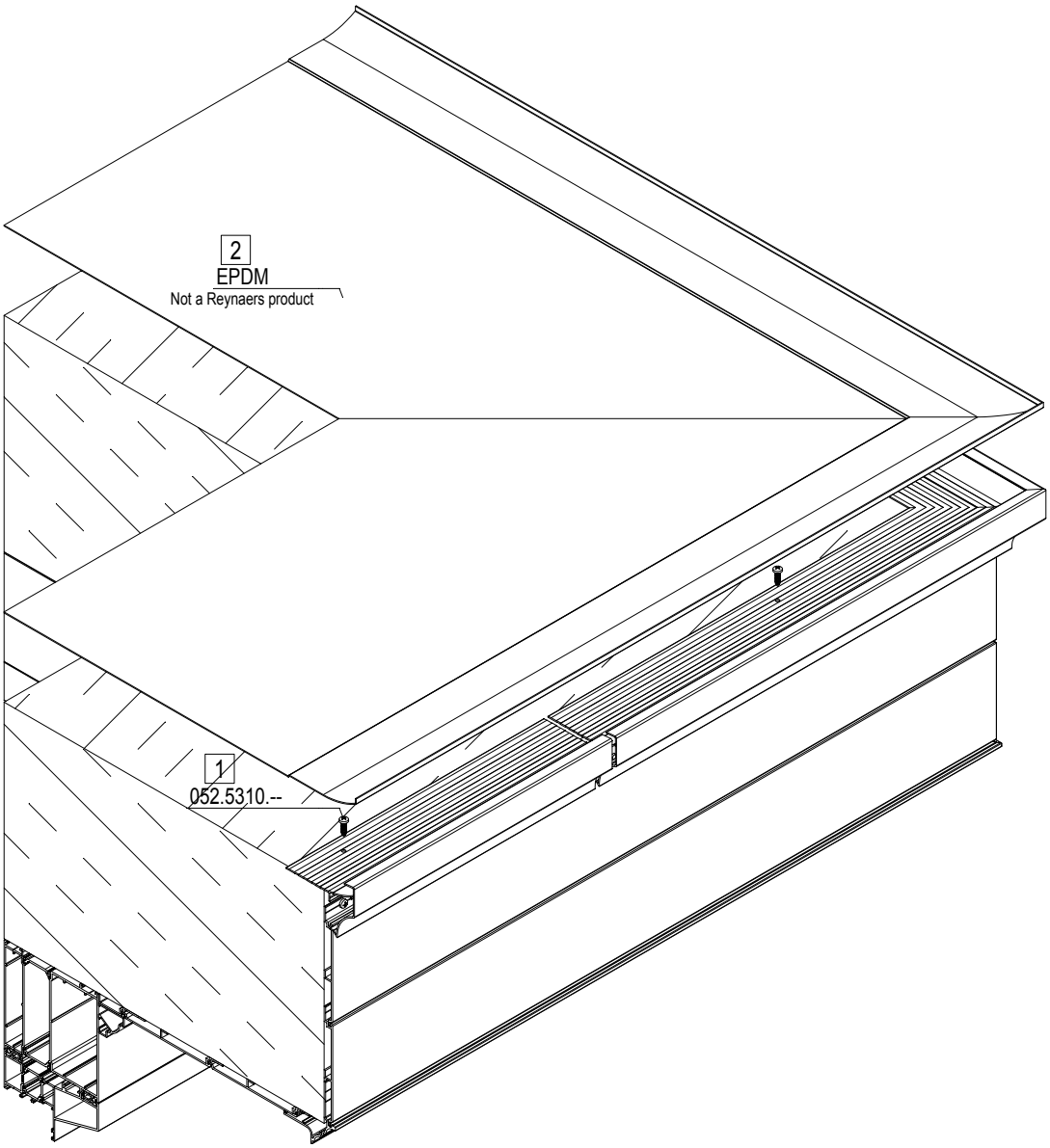

F

D2001554

F

D0070196

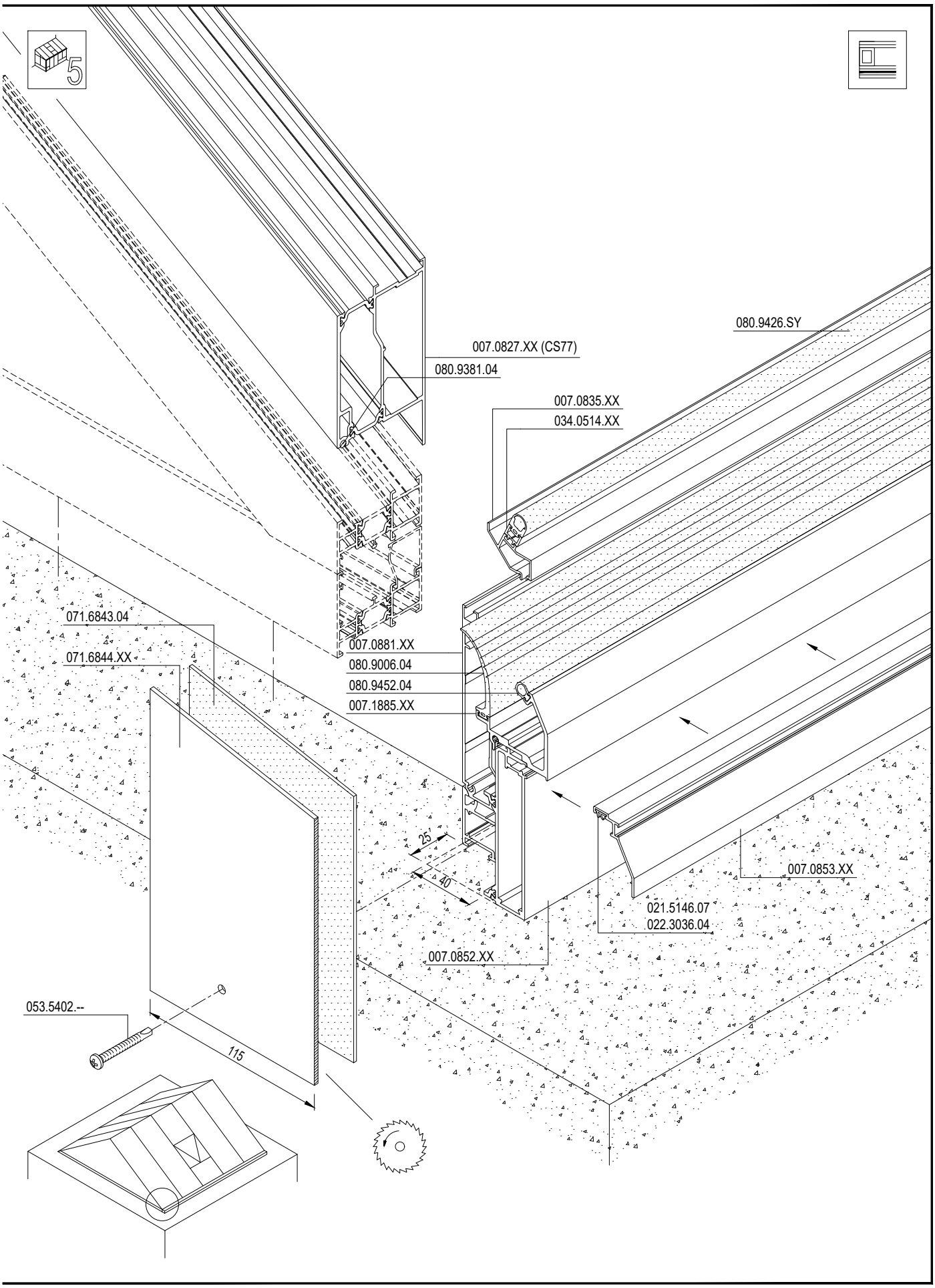
5
080.9426.SY
007.0827.XX (CS77)
080.9381.04
007.0835.XX
034.0514.XX
071.6843.04
071.6844.XX
007.0881.XX
080.9006.04
080.9452.04
007.1885.XX
25
40
007.0853.XX
021.5146.07
022.3036.04
007.0852.XX
053.5402.--
115
D0070196

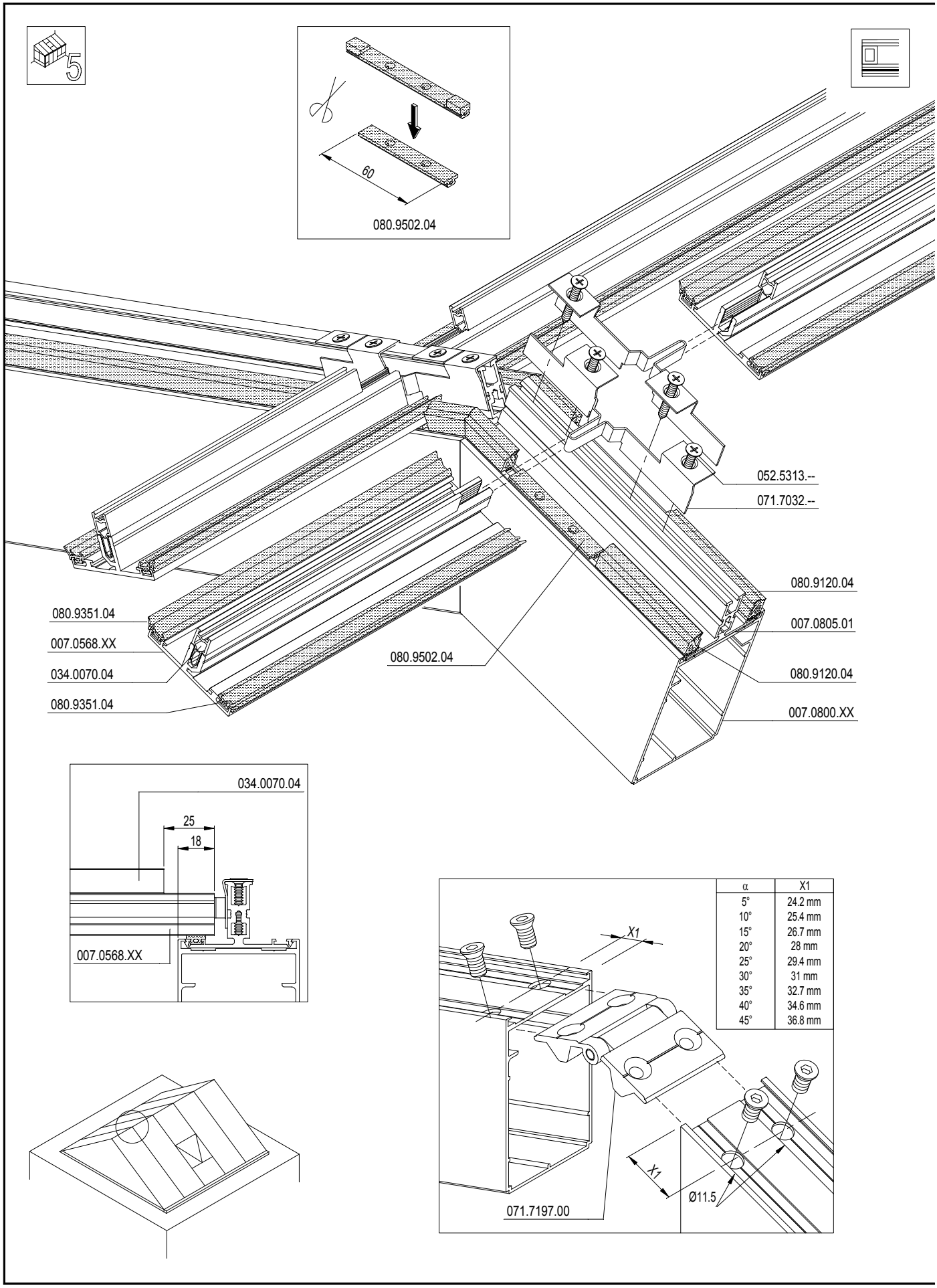

α	X1
5°	24.2 mm
10°	25.4 mm
15°	26.7 mm
20°	28 mm
25°	29.4 mm
30°	31 mm
35°	32.7 mm
40°	34.6 mm
45°	36.8 mm

F

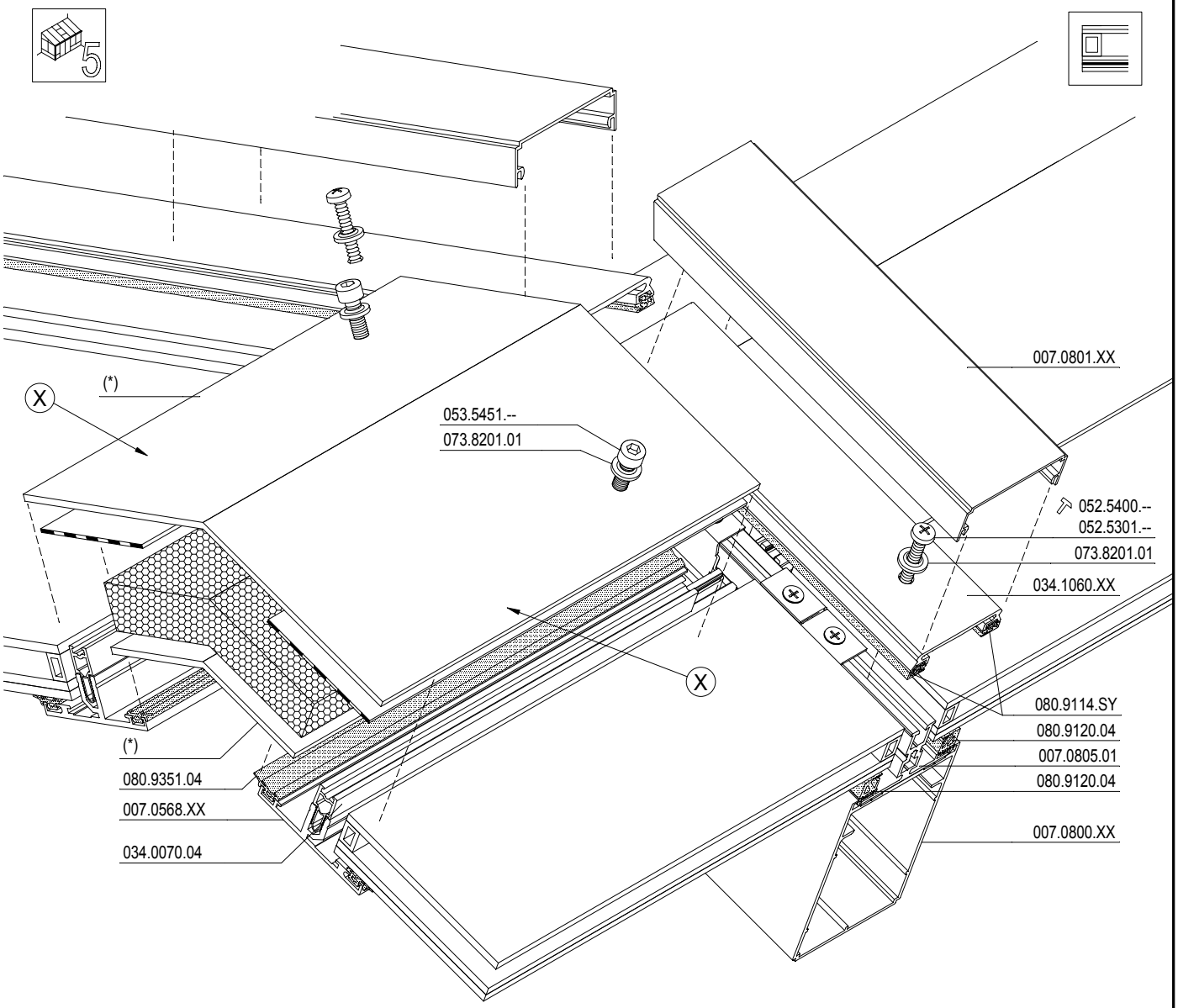
5
X
(*)
053.5451.--
073.8201.01
007.0801.XX
052.5400.--
052.5301.--
073.8201.01
034.1060.XX
X
080.9114.SY
080.9120.04
007.0805.01
080.9120.04
007.0800.XX
(*)
080.9351.04
007.0568.XX
034.0070.04

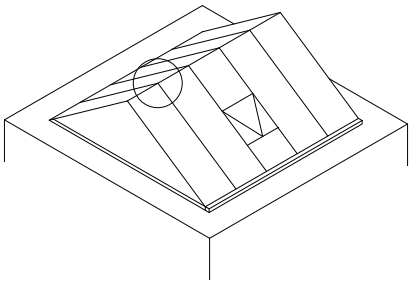

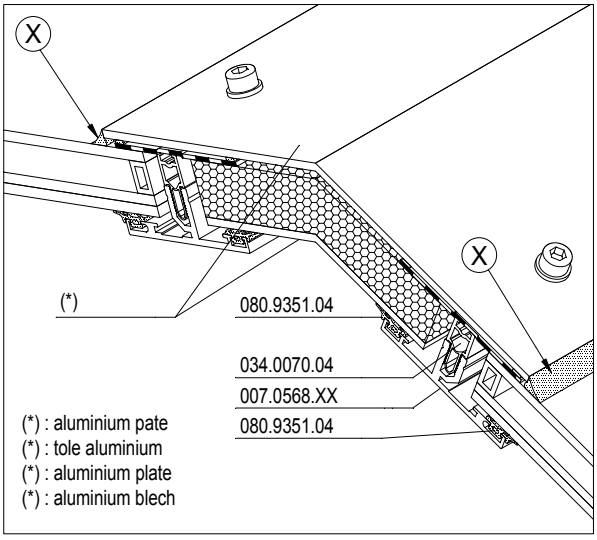
X
X
(*)
080.9351.04
034.0070.04
007.0568.XX
080.9351.04
(*) : aluminium pate
(*) : tole aluminium
(*) : aluminium plate
(*) : aluminium blech

F

D0070256

MONTAGE BEVESTIGINGSSET
MONTAGE SET DE FIXATION
ASSEMBLY FIXATION SET
MONTAGE BEFESTIGUNGSSATZ

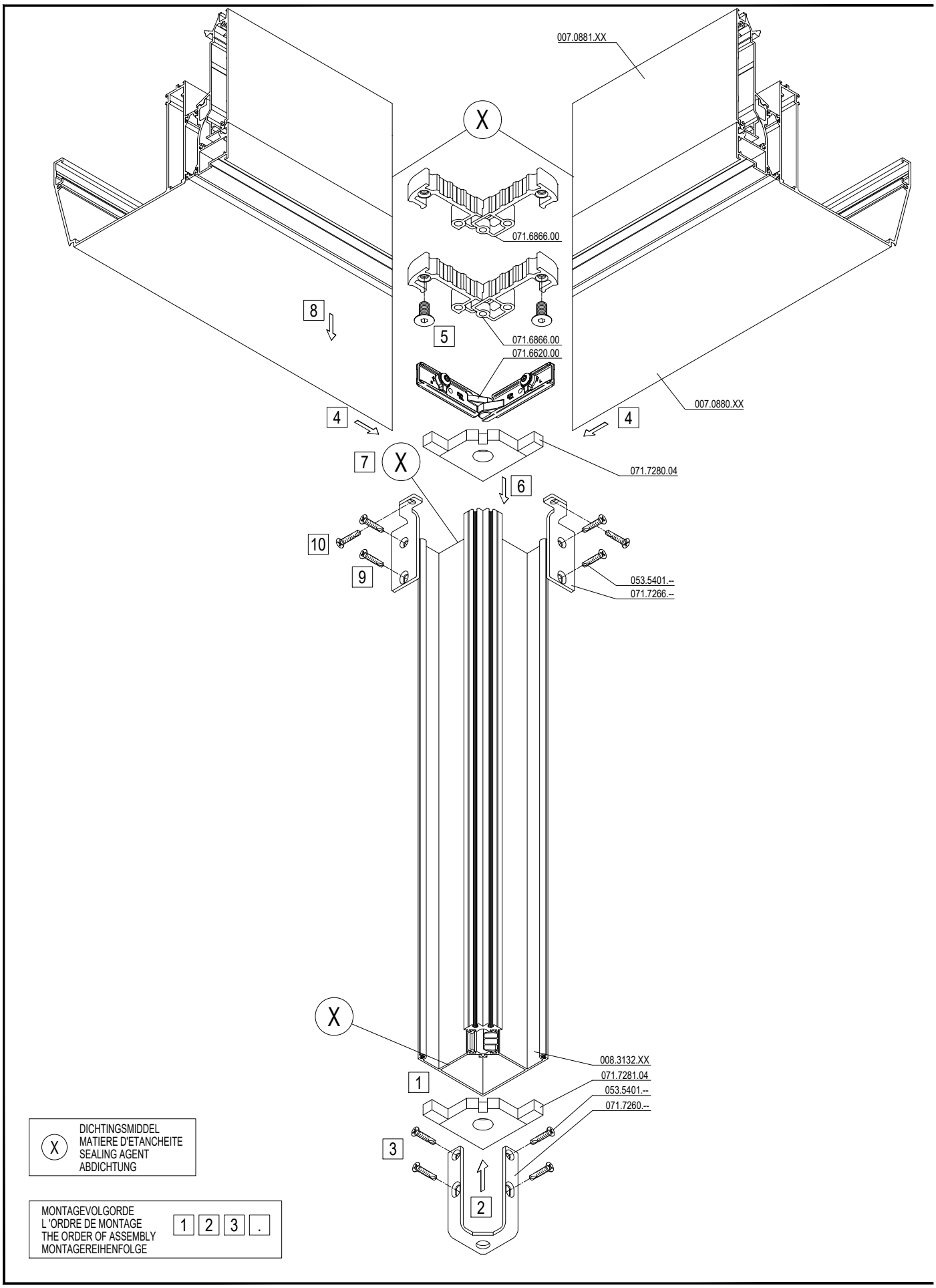

F

MONTAGE BEVESTIGINGSSET
MONTAGE SET DE FIXATION
ASSEMBLY FIXATION SET
MONTAGE BEFESTIGUNGSSATZ

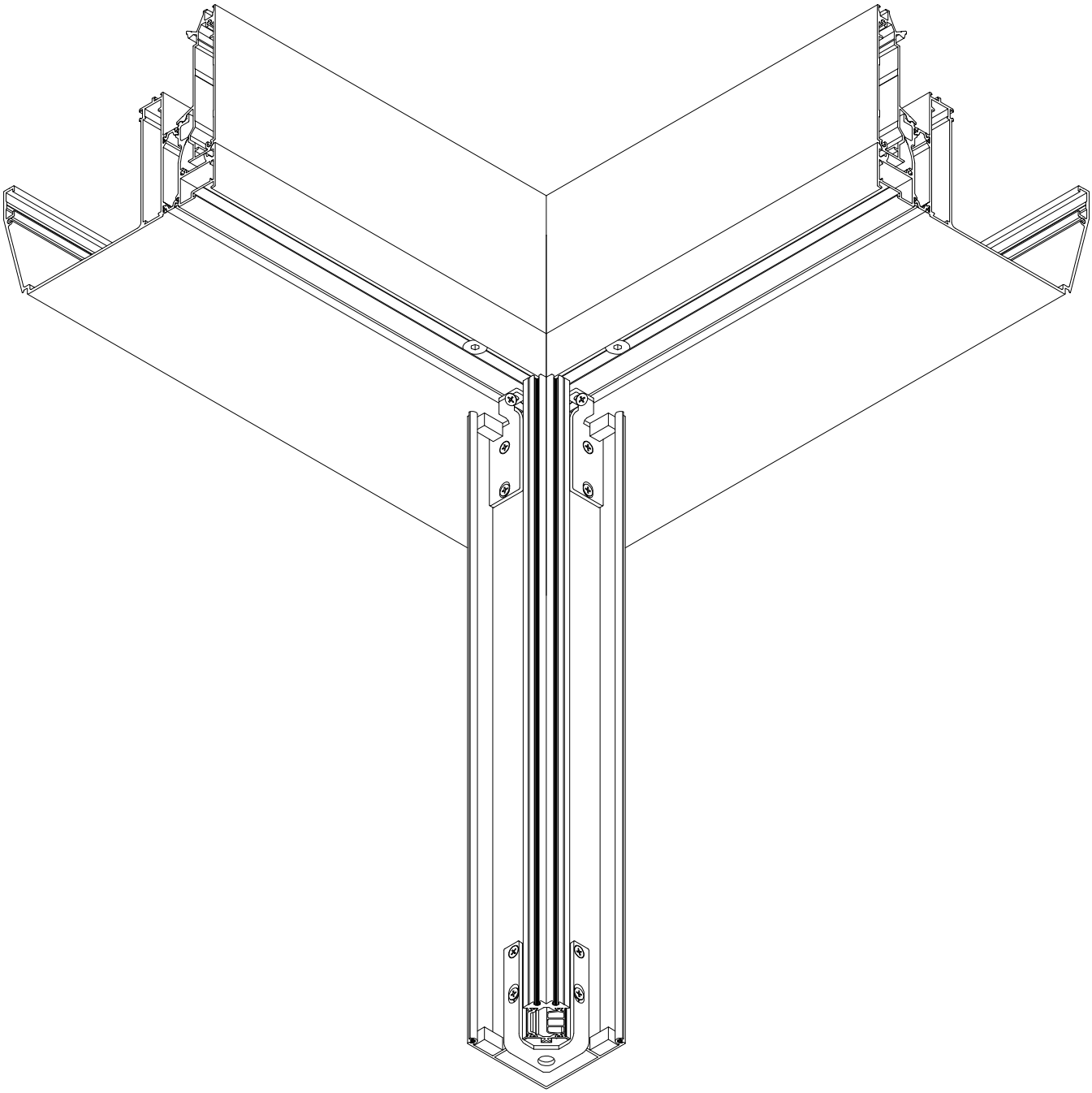

F

D3002350

MONTAGE BEVESTIGINGSSET
MONTAGE SET DE FIXATION
ASSEMBLY FIXATION SET
MONTAGE BEFESTIGUNGSSATZ

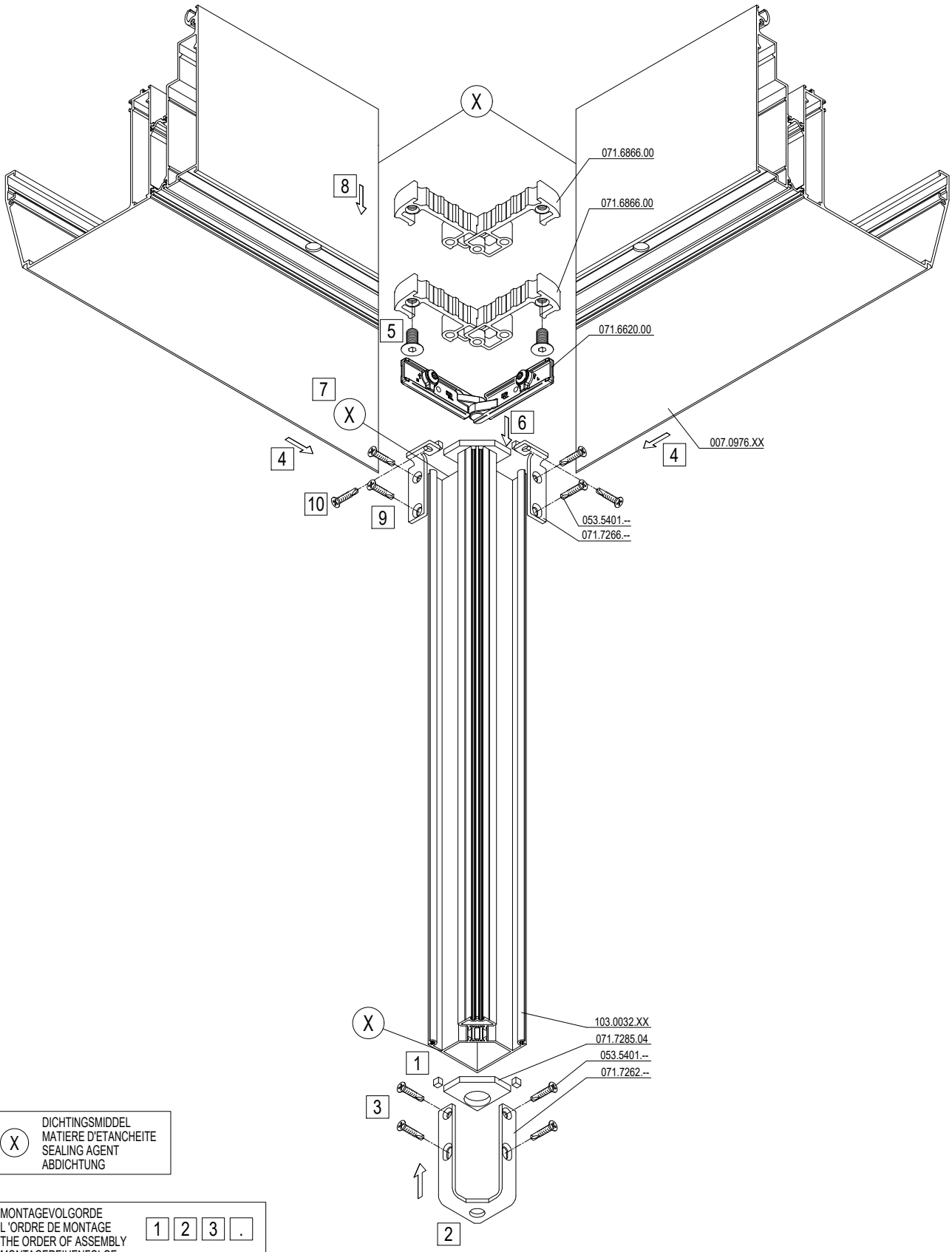

X DICHTINGSMIDDEL
MATIERE D'ETANCHEITE
SEALING AGENT
ABDICHTUNG

MONTAGEVOLGORDE
L 'ORDRE DE MONTAGE
THE ORDER OF ASSEMBLY
MONTAGEREIHENFOLGE
1 2 3 .

D3002358

F

MONTAGE BEVESTIGINGSSET
MONTAGE SET DE FIXATION
ASSEMBLY FIXATION SET
MONTAGE BEFESTIGUNGSSATZ

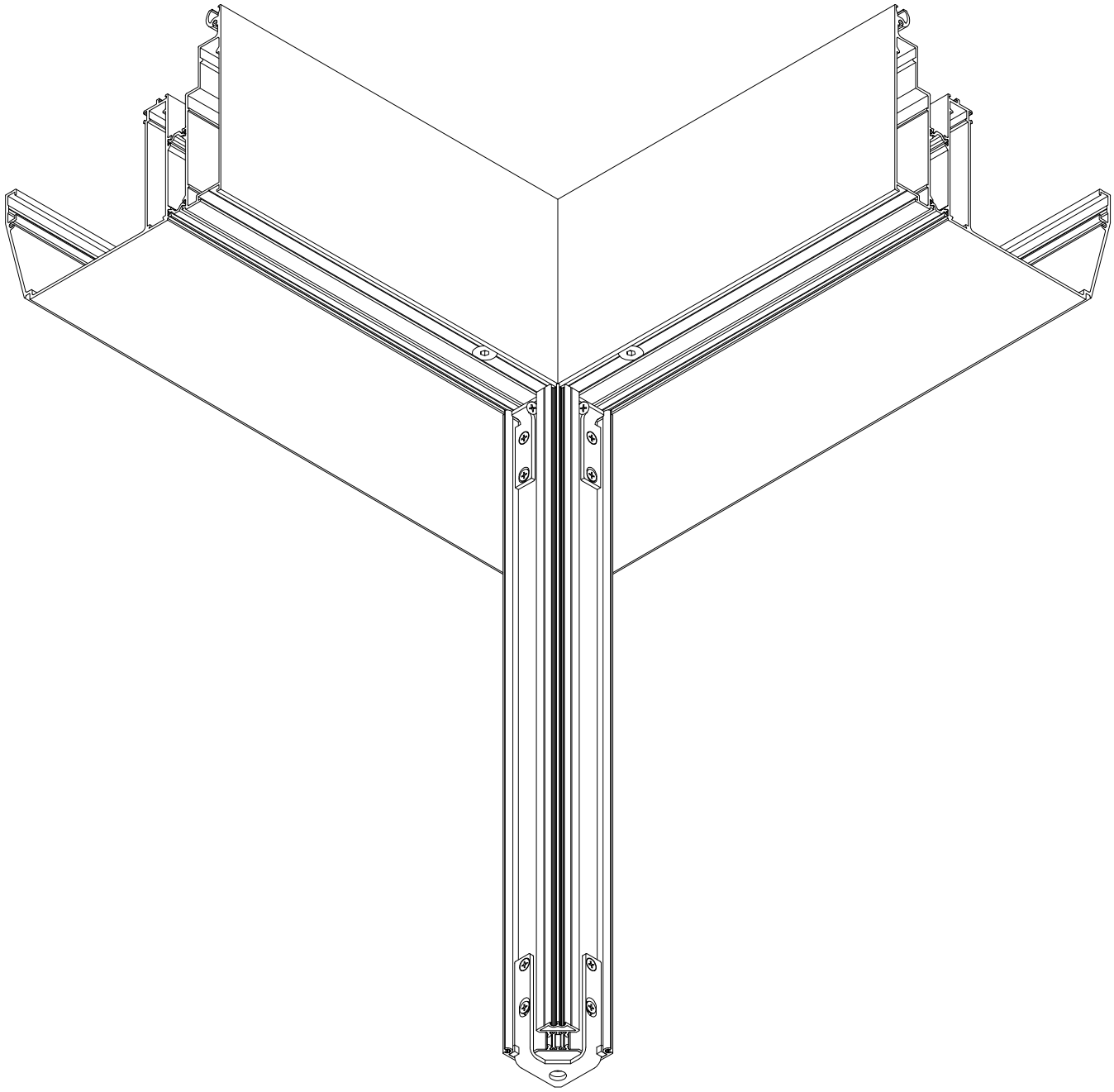

F

D3002358

MONTAGE BEVESTIGINGSSET
MONTAGE SET DE FIXATION
ASSEMBLY FIXATION SET
MONTAGE BEFESTIGUNGSSATZ

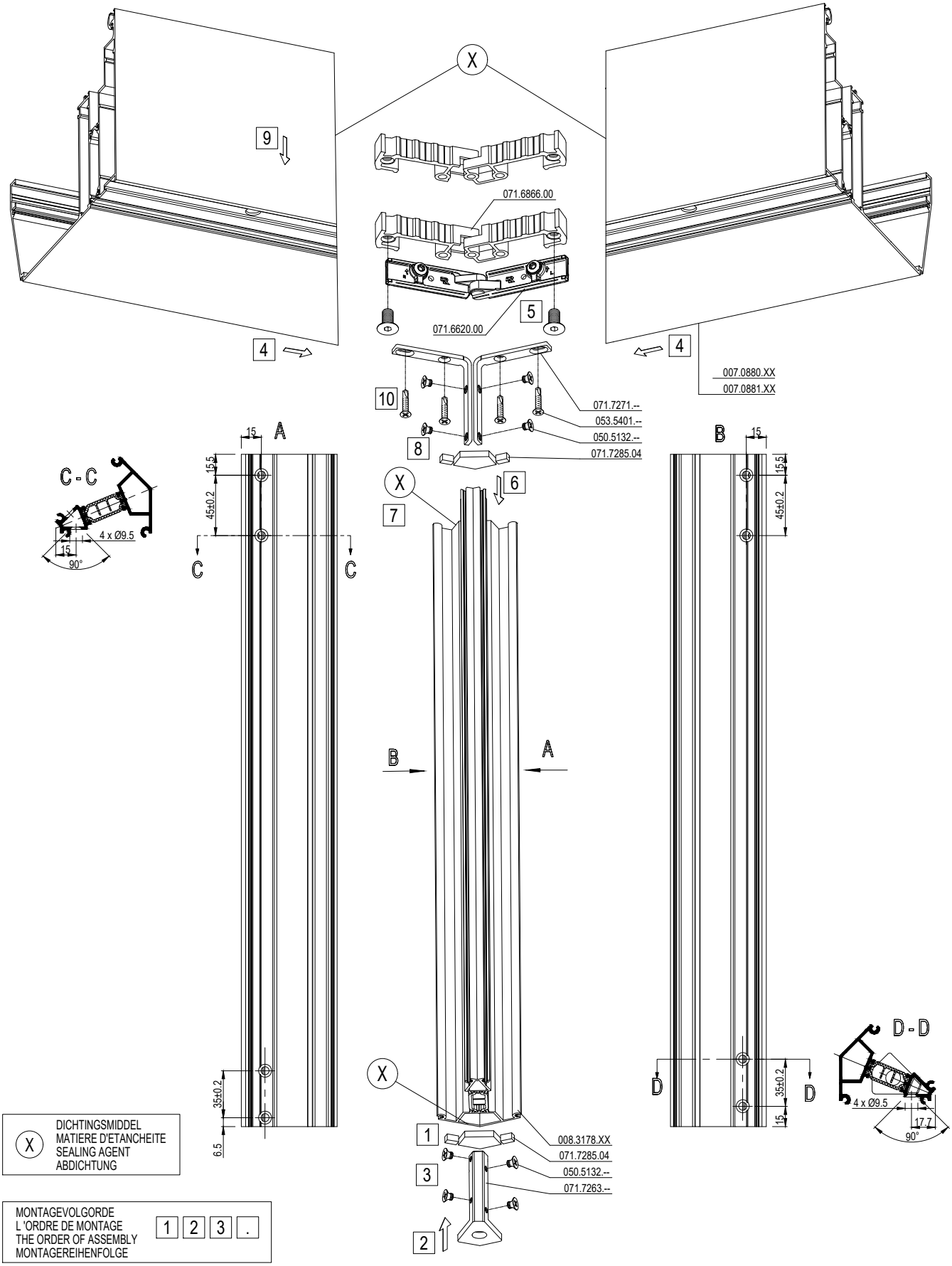

F

MONTAGE BEVESTIGINGSSET
MONTAGE SET DE FIXATION
ASSEMBLY FIXATION SET
MONTAGE BEFESTIGUNGSSATZ

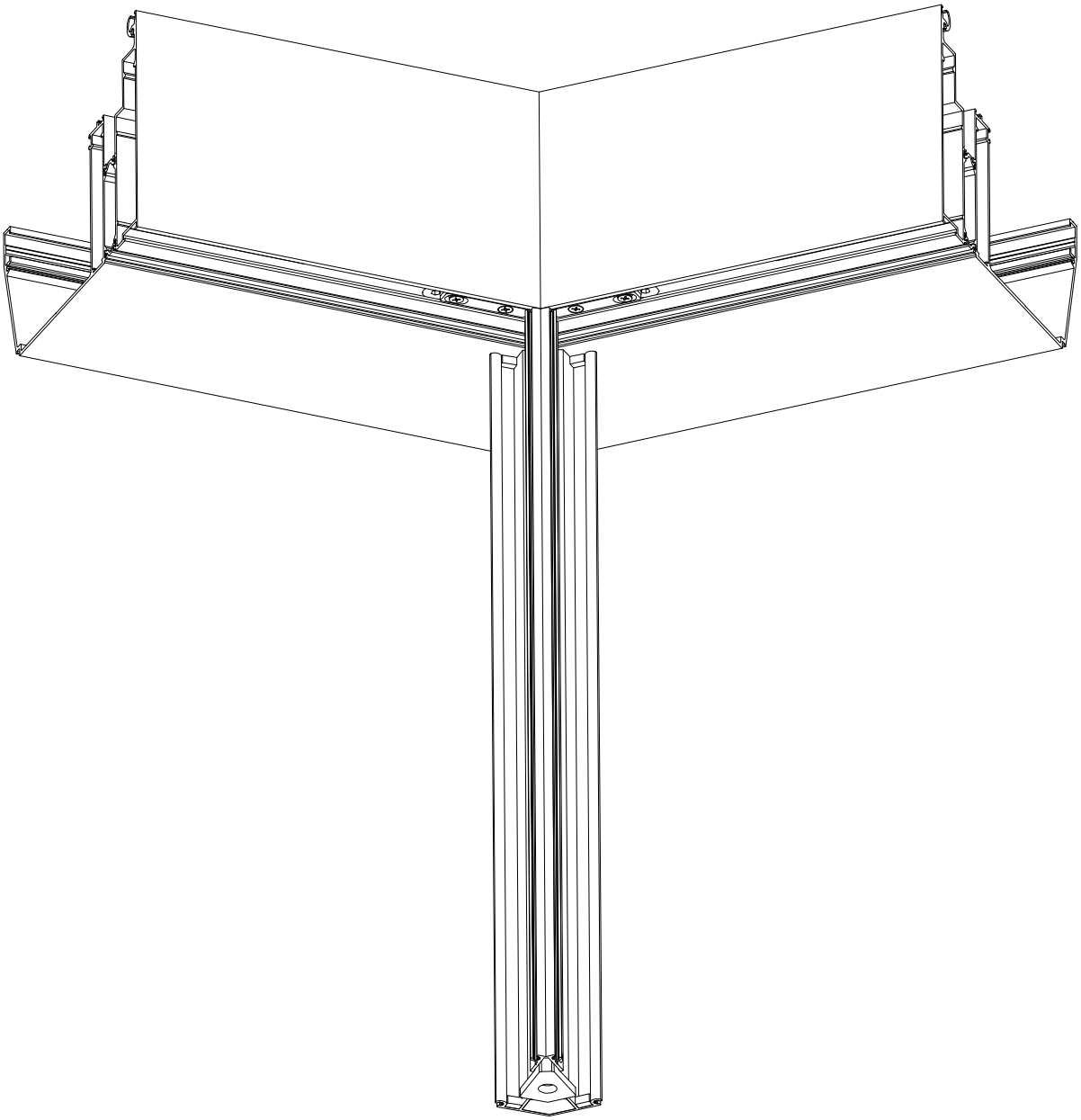

D3002360

F

MONTAGE BEVESTIGINGSSET
MONTAGE SET DE FIXATION
ASSEMBLY FIXATION SET
MONTAGE BEFESTIGUNGSSATZ

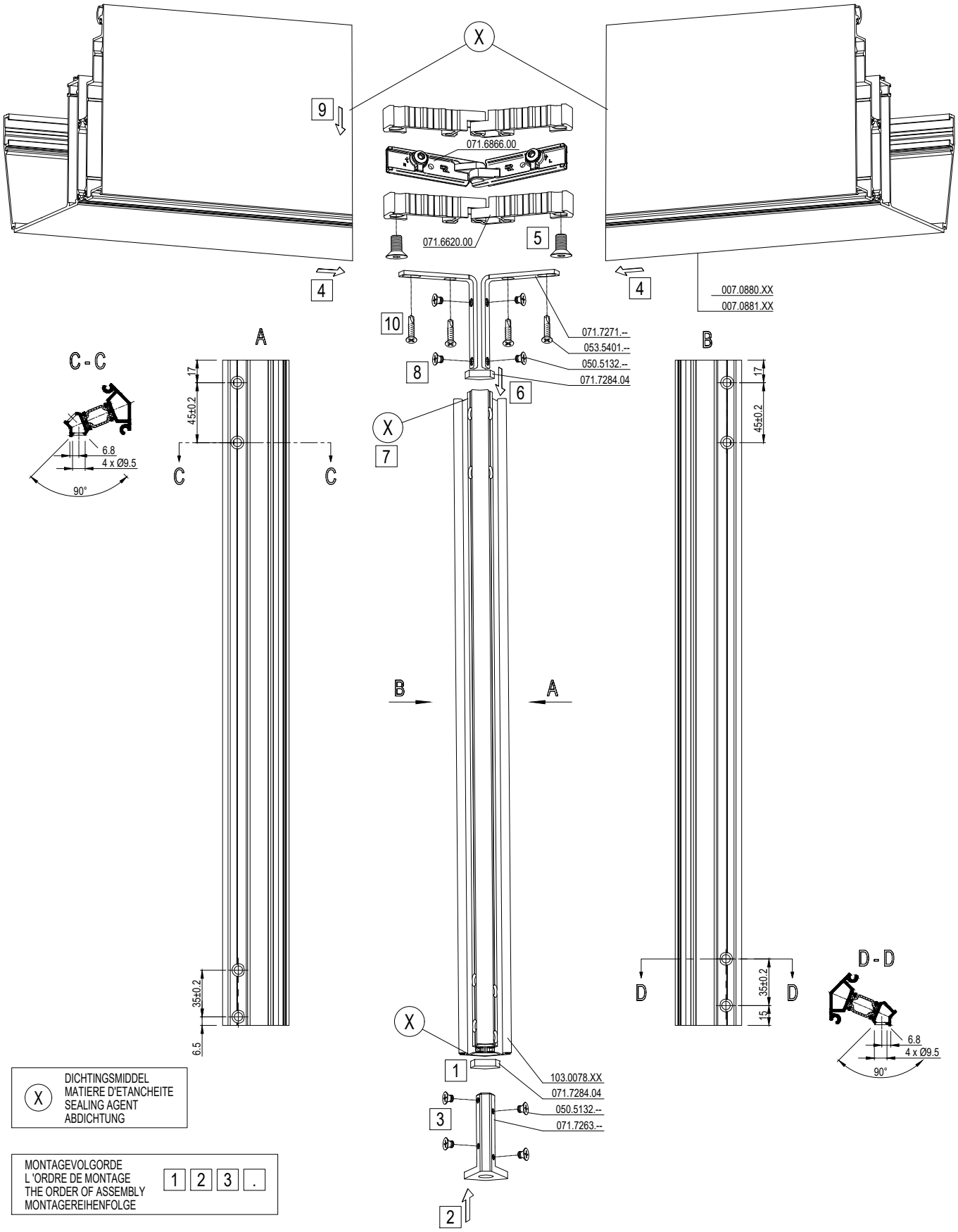

X DICHTINGSMIDDEL
MATIERE D'ETANCHEITE
SEALING AGENT
ABDICHTUNG

MONTAGEVOLGORDE
L 'ORDRE DE MONTAGE
THE ORDER OF ASSEMBLY
MONTAGEREIHENFOLGE
1 2 3 .

D3002364

F

MONTAGE BEVESTIGINGSSET
MONTAGE SET DE FIXATION
ASSEMBLY FIXATION SET
MONTAGE BEFESTIGUNGSSATZ

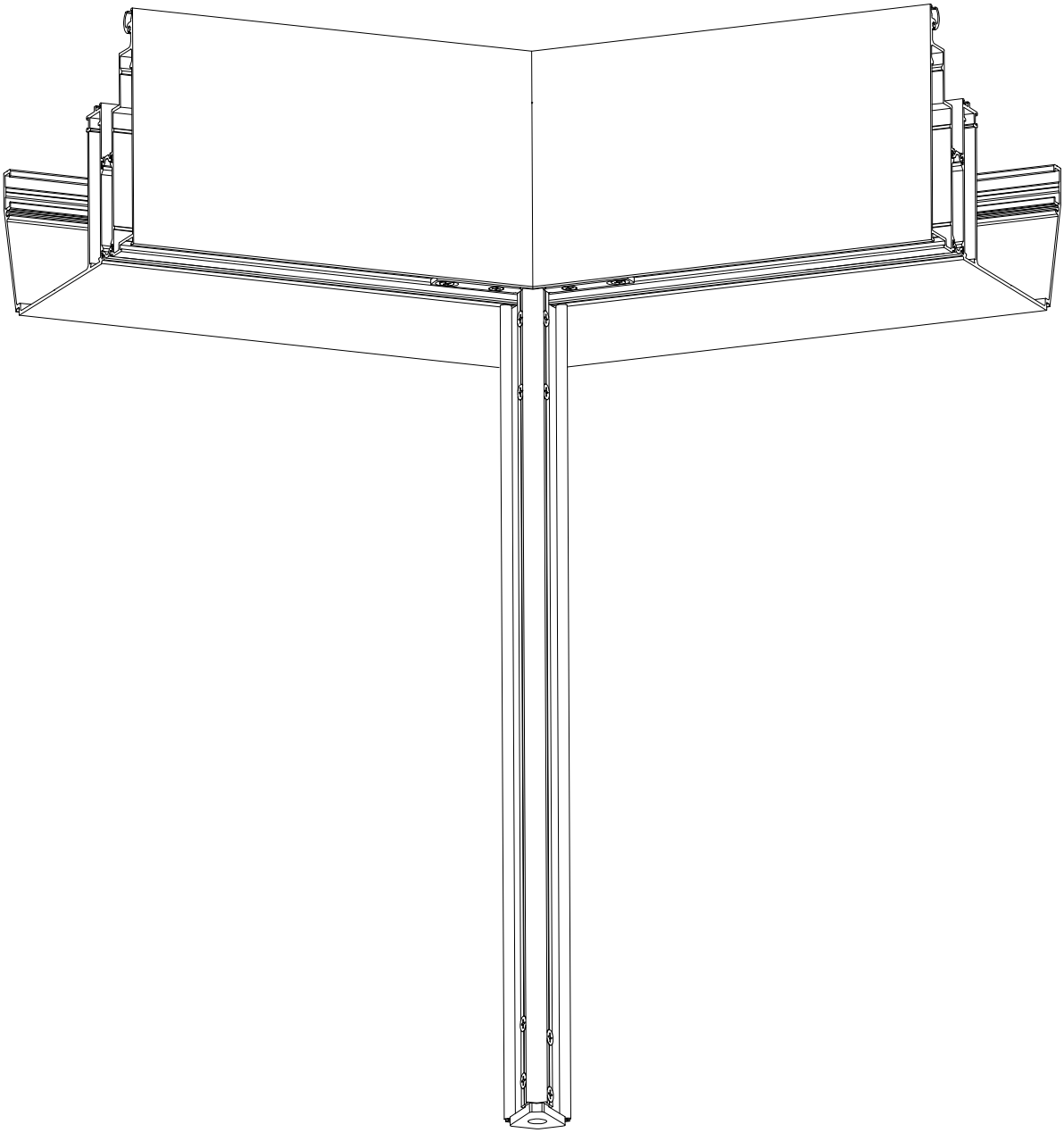

F

D3002364

F

G

Reynaers Aluminium

Toebehoren
Accessoires
Accessories
Zubehör

Art. N°		
021.5146.07	43E.G.048	D0070108
021.5532.07	43E.G.018	D0041363
022.3036.04	43E.G.049	D0041391
060.8723.–	43E.G.031	D0041374
065.6555.04	43E.G.050	D0041392
068.6039.00	43E.G.030	D0041372
068.8810.00	43E.G.030	D0041372
068.8861.00	43E.G.030	D0041372
068.8861.ZS	43E.G.030	D0041372
068.8876.00	43E.G.029	D0041373
069.6628.04	43E.G.031	D0041374
069.6831.XX	43E.G.050	D0041392
071.5440.SY	43E.G.050	D0041392
071.6345.PA	43E.G.039	D0041382
071.6346.PA	43E.G.039	D0041382
071.6347.PA	43E.G.039	D0041382
071.6348.PA	43E.G.039	D0041382
071.6349.PA	43E.G.040	D0041383
071.6350.PA	43E.G.040	D0041383
071.6547.17	43E.G.032	D0041375
071.6554.SY	43E.G.050	D0041392
071.6620.00	43E.G.023	D0041368
071.6622.00	43E.G.023	D0041368
071.6720.XX	43E.G.022_01.003	D2001518
071.6721.XX	43E.G.022_01.003	D2001518
071.6722.XX	43E.G.022_01.004	D2001519
071.6723.XX	43E.G.022_01.004	D2001519
071.6724.XX	43E.G.022_01.003	D2001518
071.6725.XX	43E.G.022_01.004	D2001519
071.6735.00	43E.G.027	D0041370
071.6737.00	43E.G.027	D0041370
071.6739.00	43E.G.027	D0041370
071.6744.XX	43E.G.013	D0041359
071.6750.00	43E.G.023	D0041368
071.6758.04	43E.G.012	D0041358
071.6759.XX	43E.G.012	D0041358
071.6761.04	43E.G.013	D0041359
071.6764.04	43E.G.011	D0041357
071.6765.XX	43E.G.011	D0041357
071.6775.XX	43E.G.008	D0041354
071.6784.00	43E.G.019	D0041364
071.6785.00	43E.G.021	D0070093
071.6798.00	43E.G.019	D0041364
071.6798.ZS	43E.G.019	D0041364
071.6799.00	43E.G.019	D0041364
071.6799.ZS	43E.G.019	D0041364
071.6816.–	43E.G.017	D0041361
071.6819.–	43E.G.017	D0041361
071.6820.PA	43E.G.028	D0041371
071.6825.PA	43E.G.028	D0041371
071.6830.PA	43E.G.028	D0041371
071.6843.04	43E.G.010	D0041356
071.6844.XX	43E.G.010	D0041356
071.6846.04	43E.G.011	D0041357
071.6847.XX	43E.G.011	D0041357
071.6851.XX	43E.G.034	D0041377
071.6854.PA	43E.G.034	D0041377
071.6856.XX	43E.G.035	D0041378
071.6859.PA	43E.G.035	D0041378
071.6861.XX	43E.G.036	D0041379
071.6864.PA	43E.G.036	D0041379
071.6866.00	43E.G.023	D0041368
071.6870.XX	43E.G.007	D0069426
071.6871.XX	43E.G.007	D0069426
071.6872.XX	43E.G.007	D0069426
071.6880.XX	43E.G.008	D0041354
071.6898.XX	43E.G.008	D0041354
071.6899.XX	43E.G.008	D0041354
071.6900.07	43E.G.018	D0041363
071.6906.07	43E.G.018	D0041363

Art. N°		
071.6909.00	43E.G.021	D0070093
071.6910.04	43E.G.033	D0041376
071.6912.XX	43E.G.016	D0041360
071.6970.XX	43E.G.007	D0069426
071.6972.XX	43E.G.007	D0069426
071.6976.XX	43E.G.016	D0041360
071.6980.XX	43E.G.037	D0041380
071.6983.PA	43E.G.037	D0041380
071.6990.XX	43E.G.038	D0041381
071.6992.PA	43E.G.038	D0041381
071.7018.XX	43E.G.014	D0070375
071.7019.XX	43E.G.010	D0041356
071.7020.XX	43E.G.015	D0070257
071.7021.04	43E.G.015	D0070257
071.7025.04	43E.G.010	D0041356
071.7032.–	43E.G.020	D0070087
071.7033.00	43E.G.020	D0070087
071.7100.00	43E.G.024	D0069512
071.7101.00	43E.G.024	D0069512
071.7102.00	43E.G.025	D0041369
071.7103.00	43E.G.025	D0041369
071.7104.00	43E.G.025	D0041369
071.7105.00	43E.G.025	D0041369
071.7143.04	43E.G.014	D0070375
071.7145.XX	43E.G.014	D0070375
071.7149.04	43E.G.014	D0070375
071.7151.XX	43E.G.014	D0070375
071.7152.XX	43E.G.022_01.002	D2001591
071.7153.XX	43E.G.022_01.002	D2001591
071.7154.XX	43E.G.022_01.002	D2001591
071.7155.XX	43E.G.022_01.002	D2001591
071.7190.00	43E.G.020	D0070087
071.7195.00	43E.G.020	D0070087
071.7197.00	43E.G.022	D0070094
071.7205.00	43E.G.021	D0070093
071.7210.00	43E.G.022	D0070094
071.7211.00	43E.G.021	D0070093
071.7215.00	43E.G.022	D0070094
071.7252.XX	43E.G.022_01.001	D2001592
071.7254.XX	43E.G.022_01.001	D2001592
071.7262.–	43E.G.071_02.001	D3002365
071.7263.–	43E.G.071_02.001	D3002365
071.7266.–	43E.G.071_02.002	D3002367
071.7267.–	43E.G.071_02.002	D3002367
071.7270.–	43E.G.071_02.002	D3002367
071.7271.–	43E.G.071_02.002	D3002367
071.7281.04	43E.G.071_02.001	D3002365
071.7282.04	43E.G.071_02.001	D3002365
071.7284.04	43E.G.071_02.001	D3002365
071.7285.04	43E.G.071_02.001	D3002365
071.8443.14	43E.G.032	D0041375
071.8444.14	43E.G.032	D0041375
071.8445.17	43E.G.033	D0041376
071.8446.–	43E.G.033	D0041376
072.6395.04	43E.G.031	D0041374
072.6425.00	43E.G.023	D0041368
072.6427.00	43E.G.032	D0041375
073.8230.00	43E.G.009	D0041355
080.9005.SY	43E.G.045	D0041389
080.9006.04	43E.G.045	D0041389
080.9008.04	43E.G.045	D0041389
080.9009.04	43E.G.045	D0041389
080.9010.04	43E.G.048	D0070108
080.9114.47	43E.G.044	D0041386
080.9116.04	43E.G.044	D0041386
080.9118.04	43E.G.044	D0041386
080.9120.04	43E.G.044	D0041386
080.9328.04	43E.G.046	D0041388
080.9351.04	43E.G.041	D0041384
080.9381.04	43E.G.048	D0070108

TOEBEHORENLIJST
LISTE DES ACCESSOIRES
LIST OF ACCESSORIES
LISTE VON ZUBEHOER

Art. N°			Art. N°		
080.9426.SY	43E.G.046	D0041388			
080.9429.04	43E.G.046	D0041388			
080.9430.04	43E.G.046	D0041388			
080.9452.04	43E.G.047	D0070115			
080.9502.04	43E.G.041	D0041384			
080.9505.SY	43E.G.048	D0070108			
080.9509.SY	43E.G.043	D0070103			
080.9514.SY	43E.G.043	D0070103			
080.9515.04	43E.G.043	D0070103			
080.9540.04	43E.G.042	D0041385			
080.9542.04	43E.G.042	D0041385			
080.9543.04	43E.G.042	D0041385			
080.9544.04	43E.G.042	D0041385			
080.9554.SY	43E.G.041	D0041384			
080.9555.SY	43E.G.041	D0041384			
080.9560.SY	43E.G.041	D0041384			
081.9026.07	43E.G.047	D0070115			
084.9080.–	43E.G.052	D0041394			
084.9086.–	43E.G.052	D0041394			
084.9107.–	43E.G.053	D0069478			
084.9108.04	43E.G.052	D0041394			
084.9115.04	43E.G.057	D0041398			
084.9380.04	43E.G.057	D0041398			
084.9480.–	43E.G.057	D0041398			
084.9711.04	43E.G.051	D0041393			
084.9712.04	43E.G.051	D0041393			
084.9713.04	43E.G.051	D0041393			
086.9150.–	43E.G.054	D0041395			
086.9175.–	43E.G.054	D0041395			
086.9208.SY	43E.G.055	D0041396			
086.9210.–	43E.G.054	D0041395			
086.9211.–	43E.G.054	D0041395			
086.9212.–	43E.G.054	D0041395			
086.9213.–	43E.G.055	D0041396			
086.9225.–	43E.G.055	D0041396			
086.9551.–	43E.G.055	D0041396			
086.9600.XX	43E.G.056	D0041397			
087.9752.01	43E.G.049	D0041391			
087.9754.01	43E.G.049	D0041391			

MACHINELIJST
LISTE DES MACHINES
LIST OF MACHINERY
LISTE VON MASCHINEN

Art. N°			Art. N°		
086.9191.–	43E.G.071	D0041414			
090.5615.–	43E.G.070	D0041413			
097.0231.00	43E.G.068	D0041411			
097.0428.00	43E.G.068	D0041411			
097.0429.00	43E.G.070	D0041413			
097.0521.00	43E.G.066	D0041409			
097.0522.00	43E.G.066	D0041409			
097.0523.00	43E.G.067	D0041410			
097.0524.00	43E.G.067	D0041410			

021.5146.07 (43E.G.048)

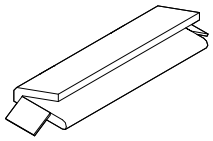

021.5532.07 (43E.G.018)

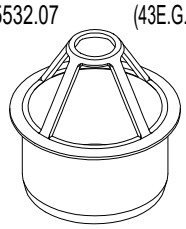

022.3036.04 (43E.G.049)

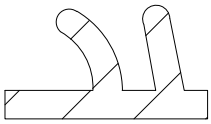

060.8723.-- (43E.G.031)

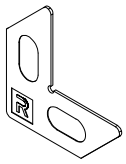

065.6555.04 (43E.G.050)

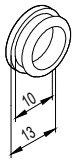

068.6039.00 (43E.G.030)

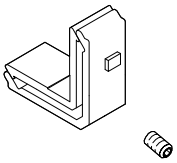

068.8810.00 (43E.G.030)

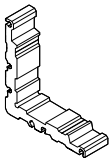

068.8861.00 (43E.G.030)

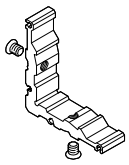

068.8876.00 (43E.G.029)

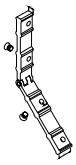

069.6628.04 (43E.G.031)

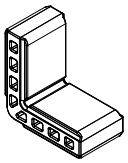

069.6831.XX (43E.G.050)

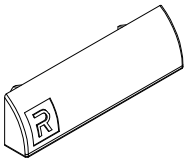

071.5440.SY (43E.G.050)

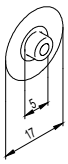

071.6547.17 (43E.G.032)

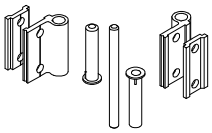

071.6554.SY (43E.G.050)

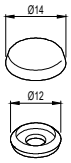

071.6620.00 (43E.G.023)

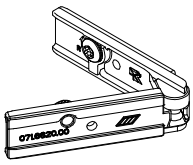

071.6622.00 (43E.G.023)

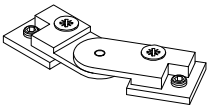

071.6720.XX (43E.G.022_01.003)

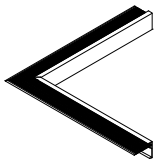

071.6721.XX (43E.G.022_01.003)

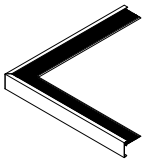

071.6722.XX (43E.G.022_01.004)

071.6723.XX (43E.G.022_01.004)

071.6724.XX (43E.G.022_01.003)

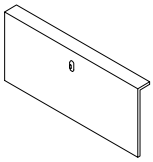

071.6725.XX (43E.G.022_01.004)

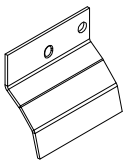

071.6735.00 (43E.G.027)

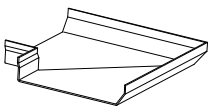

071.6737.00 (43E.G.027)

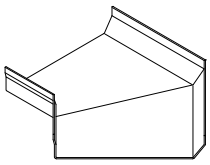

071.6739.00 (43E.G.027)

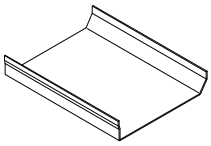

071.6744.XX (43E.G.013)

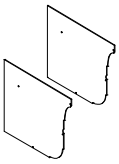

071.6750.00 (43E.G.023)

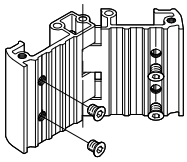

D0070345

G

OVERZICHT
APERCU
OVERVIEW
UEBERSICHT

071.6758.04 (43E.G.012)

071.6759.XX (43E.G.012)

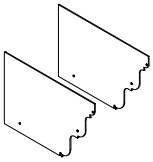

071.6761.04 (43E.G.013)

071.6764.04 (43E.G.011)

071.6765.XX (43E.G.011)

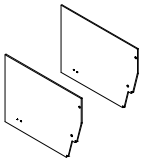

071.6775.XX (43E.G.008)

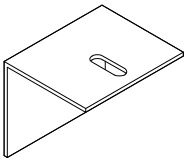

071.6784.00 (43E.G.019)

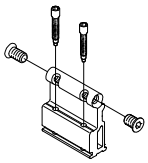

071.6785.00 (43E.G.021)

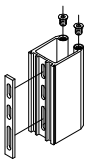

071.6798.00 (43E.G.019)

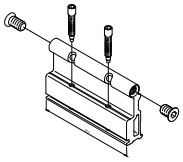

071.6799.00 (43E.G.019)

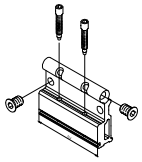

071.6816.-- (43E.G.017)

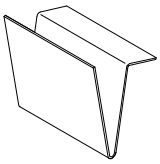

071.6819.-- (43E.G.017)

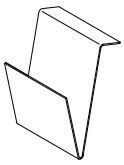

071.6820.PA (43E.G.028)

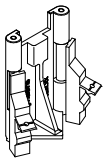

071.6825.PA (43E.G.028)

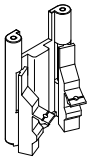

071.6830.PA (43E.G.028)

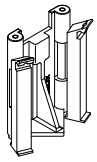

071.6843.04 (43E.G.010)

071.6844.XX (43E.G.010)

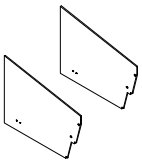

071.6846.04 (43E.G.011)

071.6847.XX (43E.G.011)

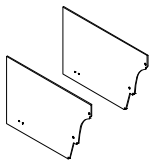

071.6851.XX (43E.G.034)

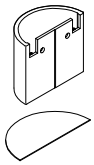

071.6854.PA (43E.G.034)

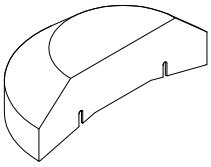

071.6856.XX (43E.G.035)

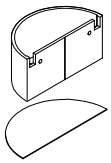

071.6859.PA (43E.G.035)

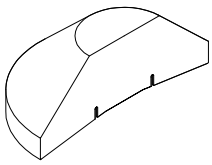

071.6861.XX (43E.G.036)

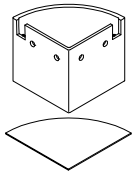

071.6864.PA (43E.G.036)

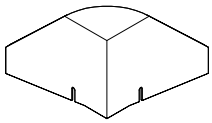

071.6866.00 (43E.G.023)

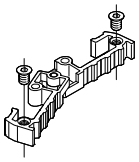

071.6870.XX (43E.G.007)

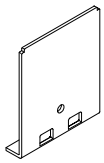

071.6871.XX (43E.G.007)

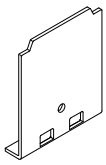

071.6872.XX (43E.G.007)

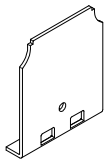

071.6876.00 (43E.G.026)

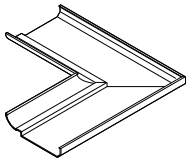

071.6877.00 (43E.G.026)

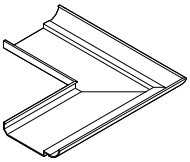

071.6878.00 (43E.G.026)

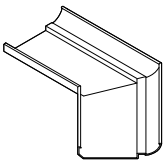

071.6879.00 (43E.G.026)

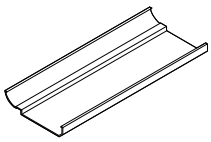

D0070346

071.6880.XX (43E.G.008)

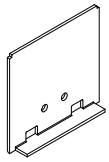

071.6898.XX (43E.G.008)

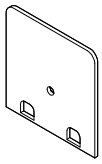

071.6899.XX (43E.G.008)

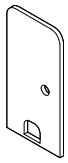

071.6900.07 (43E.G.018)

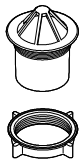

071.6906.07 (43E.G.018)

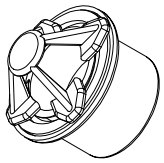

071.6909.00 (43E.G.021)

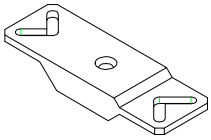

071.6910.04 (43E.G.033)

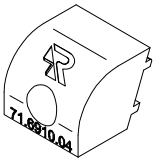

071.6912.XX (43E.G.016)

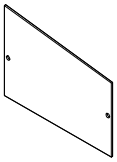

071.6970.XX (43E.G.007)

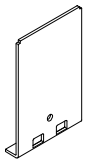

071.6972.XX (43E.G.007)

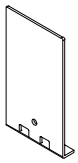

071.6976.XX (43E.G.016)

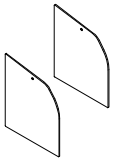

071.6980.XX (43E.G.037)

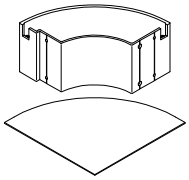

071.6983.PA (43E.G.037)

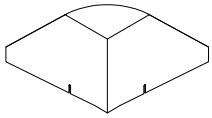

071.6990.XX (43E.G.038)

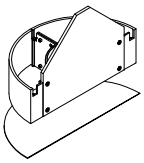

071.6992.PA (43E.G.038)

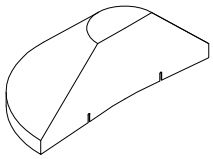

071.7018.XX (43E.G.014)

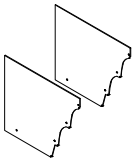

071.7019.XX (43E.G.010)

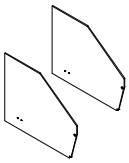

071.7020.XX (43E.G.015)

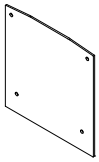

071.7021.04 (43E.G.015)

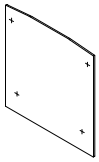

071.7025.04 (43E.G.010)

071.7032.-- (43E.G.020)

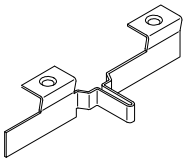

071.7033.00 (43E.G.020)

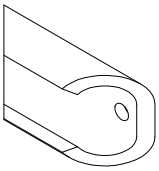

071.7100.00 (43E.G.024)

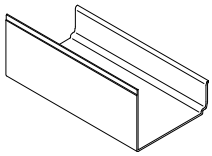

071.7101.00 (43E.G.024)

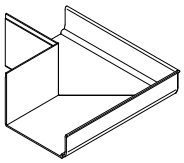

071.7102.00 (43E.G.025)

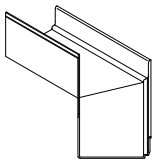

071.7103.00 (43E.G.025)

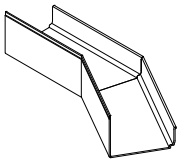

071.7104.00 (43E.G.025)

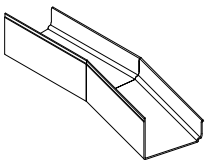

071.7105.00 (43E.G.025)

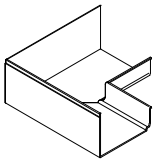

071.7143.04 (43E.G.014)

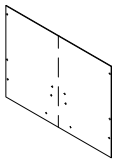

071.7145.XX (43E.G.014)

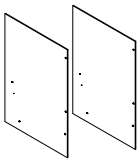

071.7152.XX (43E.G.022_01.002)

071.7153.XX (43E.G.022_01.002)

071.7154.XX (43E.G.022_01.002)

D0070347

CR 120

OVERZICHT
APERCU
OVERVIEW
UEBERSICHT

071.7155.XX (43E.G.022_01.002)

071.7190.00 (43E.G.020)

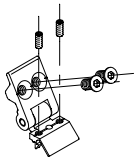

071.7195.00 (43E.G.020)

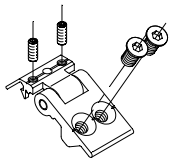

071.7197.00 (43E.G.022)

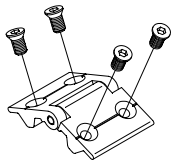

071.7205.00 (43E.G.021)

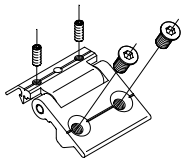

071.7210.00 (43E.G.022)

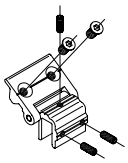

071.7211.00 (43E.G.021)

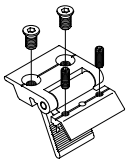

071.7215.00 (43E.G.022)

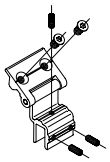

071.7252.XX (43E.G.022_01.001)

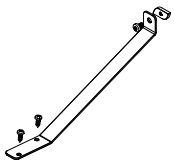

071.7254.XX (43E.G.022_01.001)

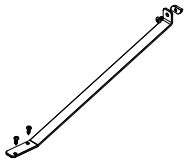

071.8443.14 (43E.G.032)

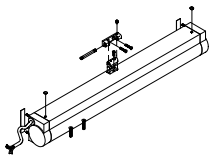

071.8444.14 (43E.G.032)

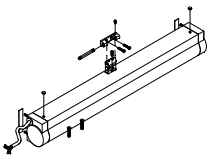

071.8445.17 (43E.G.033)

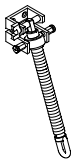

071.8446.-- (43E.G.033)

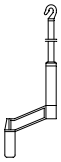

072.6395.04 (43E.G.031)

072.6425.00 (43E.G.023)

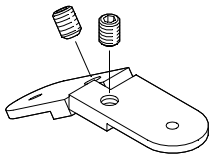

072.6427.00 (43E.G.032)

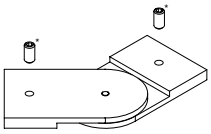

073.8230.00 (43E.G.009)

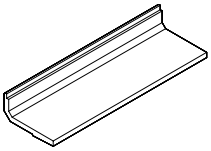

080.9005.SY (43E.G.045)

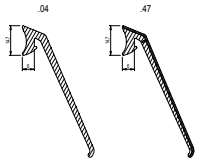

080.9006.04 (43E.G.045)

080.9008.04 (43E.G.045)

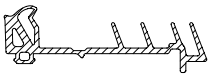

080.9009.04 (43E.G.045)

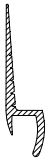

080.9010.04 (43E.G.048)

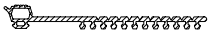

080.9114.SY (43E.G.044)

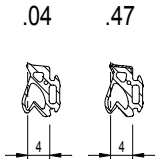

080.9116.04 (43E.G.044)

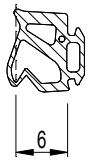

080.9118.04 (43E.G.044)

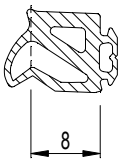

080.9120.04 (43E.G.044)

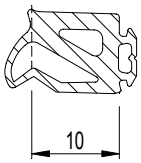

080.9328.04 (43E.G.046)

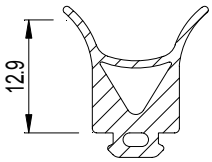

080.9351.04 (43E.G.041)

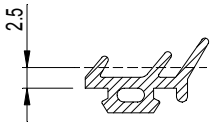

080.9381.04 (43E.G.048)

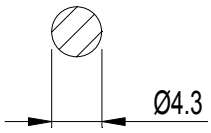

080.9426.SY (43E.G.046)

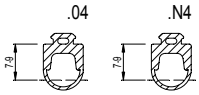

.N4 = NOT SILICONISED

080.9429.04 (43E.G.046)

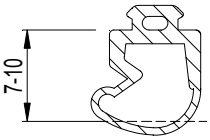

080.9430.04 (43E.G.046)

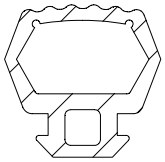

080.9452.04 (43E.G.047)

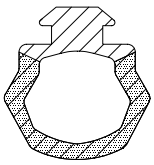

080.9502.04 (43E.G.041)

D0070348

G

080.9505.SY (43E.G.048)

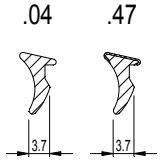

080.9509.SY (43E.G.043)

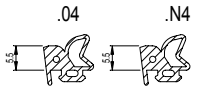

.N4 = NOT SILICONISED

080.9514.SY (43E.G.043)

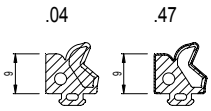

080.9515.04 (43E.G.043)

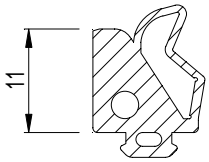

080.9540.04 (43E.G.042)

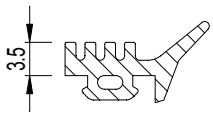

080.9542.04 (43E.G.042)

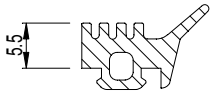

080.9543.04 (43E.G.042)

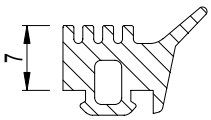

080.9544.04 (43E.G.042)

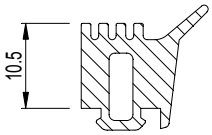

080.9554.SY (43E.G.041)

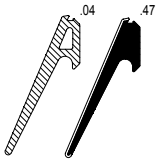

080.9555.SY (43E.G.041)

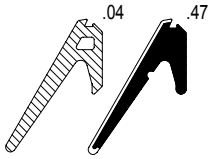

080.9560.SY (43E.G.041)

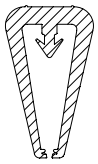

084.9711.04 (43E.G.051)

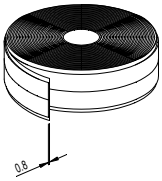

084.9712.04 (43E.G.051)

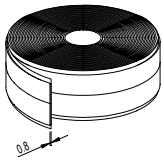

084.9713.04 (43E.G.051)

081.9026.07 (43E.G.047)

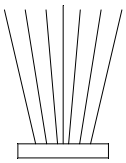

084.9080.-- (43E.G.052)

084.9086.-- (43E.G.052)

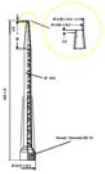

084.9107.-- (43E.G.053)

084.9108.04 (43E.G.052)

084.9115.04 (43E.G.057)

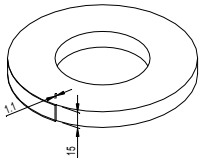

084.9380.-- (43E.G.057)

084.9480.-- (43E.G.057)

086.9150.-- (43E.G.054)

086.9175.-- (43E.G.054)

086.9191.-- (43E.G.071)

086.9208.SY (43E.G.055)

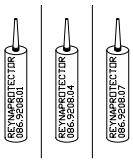

086.9210.-- (43E.G.054)

086.9211.-- (43E.G.054)

086.9212.-- (43E.G.054)

086.9213.-- (43E.G.055)

086.9225.-- (43E.G.055)

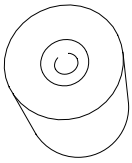

086.9551.-- (43E.G.055)

086.9600.XX (43E.G.056)

087.9752.01 (43E.G.049)

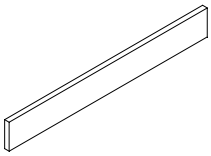

087.9754.01 (43E.G.049)

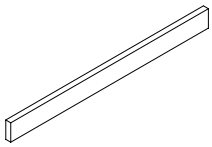

D0070349

090.5615.-- (43E.G.070)

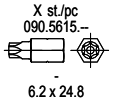

097.0231.00 (43E.G.068)

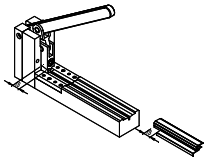

097.0428.00 (43E.G.068)

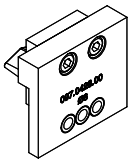

097.0429.00 (43E.G.070)

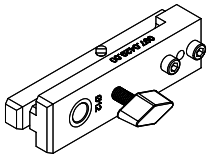

097.0521.00 (43E.G.066)

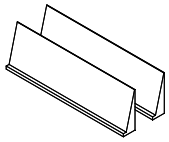

097.0522.00 (43E.G.066)

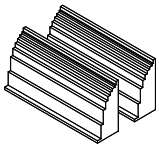

097.0523.00 (43E.G.067)

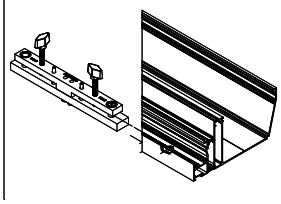

097.0524.00 (43E.G.067)

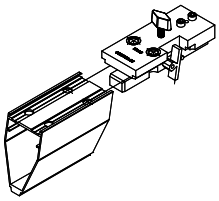

D0070508

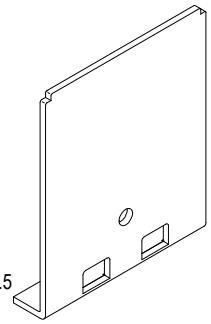 H=72.5 B=12 D=60	071.6870.XX STOOTPLAAT ARRET VITRAGE TOITURE GLASS PANEL STOP ENDSTUECK VERGLASUNG	CR 120 007.0804.01 007.0805.01 007.0806.01 007.0807.01		1 st./pc 052.5315.-- DIN 7981 4.2 x 25
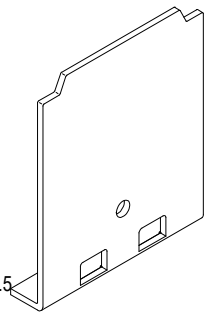 H=72.5 B=12 D=60	071.6871.XX STOOTPLAAT ARRET VITRAGE TOITURE GLASS PANEL STOP ENDSTUECK VERGLASUNG	CR 120 007.0804.01 007.0805.01 007.0806.01 007.0807.01		1 st./pc 052.5315.-- DIN 7981 4.2 x 25
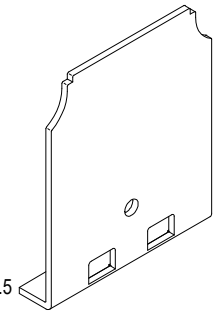 H=72.5 B=12 D=60	071.6872.XX STOOTPLAAT ARRET VITRAGE TOITURE GLASS PANEL STOP ENDSTUECK VERGLASUNG	CR 120 007.0804.01 007.0805.01 007.0806.01 007.0807.01		1 st./pc 052.5315.-- DIN 7981 4.2 x 25
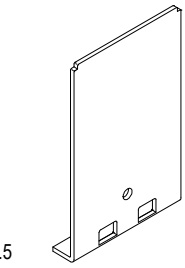 H=95.5 B=12 D=60	071.6970.XX STOOTPLAAT ARRET VITRAGE TOITURE GLASS PANEL STOP ENDSTUECK VERGLASUNG	CR 120 007.0804.01 007.0805.01 007.0806.01 007.0807.01		1 st./pc 052.5315.-- DIN 7981 4.2 x 25
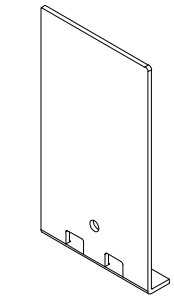 110 12 60	071.6972.XX STOOTPLAAT ARRET VITRAGE TOITURE GLASS PANEL STOP ENDSTUECK VERGLASUNG	CR 120		1 st./pc 052.5315.-- DIN 7981 4.2 x 25

D0069426

STOOTPLAAT
ARRET VITRAGE TOITURE
GLASS PANEL STOP
ENDSTUECK VERGLASUNG

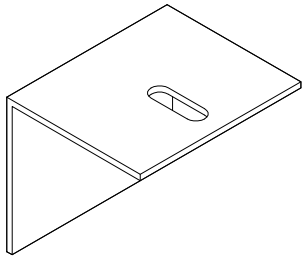 H=50 B=50 D=60	071.6775.XX STOOTHOEK BEGLAZING ARRET DE VITRAGE TOITURE GLASSPANEL STOP ABSCHLUSSKLOTZE VERGLASUNG	CR 120 021.4533.XX 021.4534.XX PR 200 TR 200 CINTRO		
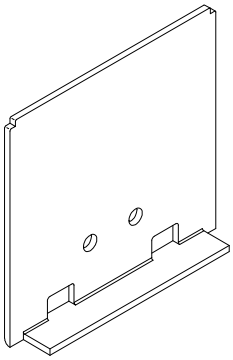 H=72.5 B=12 D=77	071.6880.XX STOOTPLAAT ARRET VITRAGE TOITURE GLASS PANEL STOP ENDSTUECK VERGLASUNG	CR 120 007.0806.01 007.0807.01 007.0832.XX		2 st./pc 052.5315.-- DIN 7981 4.2 x 25
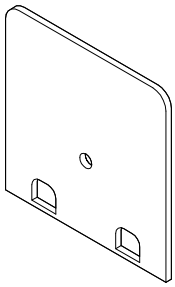 H=60 B=60 D=2	071.6898.XX STOOTPLAAT ARRET VITRAGE TOITURE GLASS PANEL STOP ENDSTUECK VERGLASUNG	CR 120 007.0573.XX PR 200 TR 200		1 st./pc 052.5310.-- DIN 7981 4.2 x 16
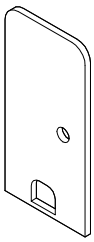 H=60 B=30 D=2	071.6899.XX STOOTPLAAT ARRET VITRAGE TOITURE GLASS PANEL STOP ENDSTUECK VERGLASUNG	CR 120 007.1571.XX TR 200 PR 200		1 st./pc 052.5310.-- DIN 7981 4.2 x 16

D0041354

CR 120

GLASSTEUN
SUPPORT CALE DE VITRAGE
GLASS SUPPORT
GLASAUFLAGEPROFIL

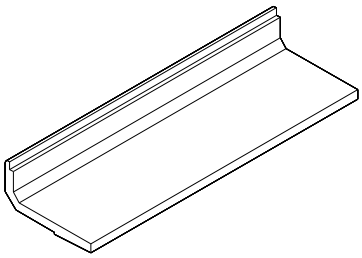

H=15
B=32
D=100

073.8230.00

GLASSTEUN
14/32MM

SUPPORT CALE DE VITRAGE
14/32MM

GLASS SUPPORT
14/32MM

GLASAUFLAGEPROFIL
14/32MM

CR 120
007.0568.XX
034.0668.XX

CW 60
PR 200
TR 200

CW 50

D0041355

G

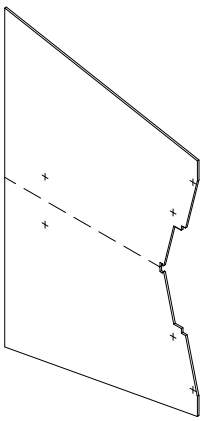 H=366 B=240 D=2	071.6843.04 AFDICHTING ZIJKANT GOOT FERMETURE LATERALE GOUTTIERE END PIECE GUTTER ENDKAPPE DACHRINNE	CR 120 071.6844.XX		
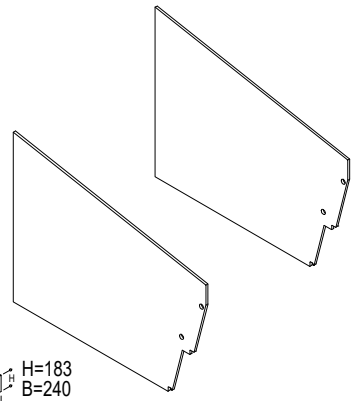 H=183 B=240 D=2.5	071.6844.XX AFDICHTING ZIJKANT GOOT FERMETURE LATERALE GOUTTIERE END PIECE GUTTER ENDKAPPE DACHRINNE	CR 120 007.0876.XX 007.0878.XX 007.0879.04 007.0880.XX 007.0882.XX 0I7.0880.XX TR 200 BOREALE		4 st./pc 052.5310.-- DIN 7981 4.2 x 16 2 st./pc 053.5402.-- DIN 7504N 4.2 x 38
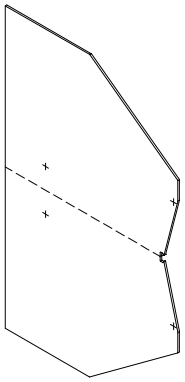 H=348 B=215 D=2	071.7025.04 AFDICHTING ZIJKANT GOOT FERMETURE LATERALE GOUTTIERE END PIECE GUTTER ENDKAPPE DACHRINNE	CR 120 071.7019.XX		
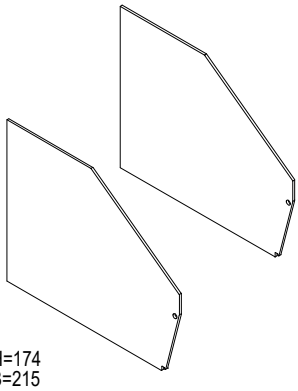 H=174 B=215 D=2.5	071.7019.XX AFDICHTING ZIJKANT GOOT FERMETURE LATERALE GOUTTIERE END PIECE GUTTER ENDKAPPE DACHRINNE	CR 120 007.0876.XX 007.0878.XX 007.0879.04 007.0880.XX 0I7.0880.XX TR 200 BOREALE		2 st./pc 052.5310.-- DIN 7981 4.2 x 16 2 st./pc 053.5402.-- DIN 7504N 4.2 x 38

D0041356

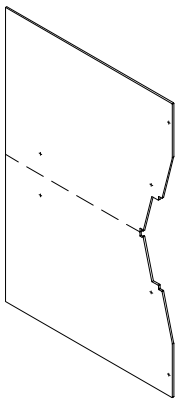 H=366 B=240 D=2	071.6764.04 AFDICHTING ZIJKANT GOOT FERMETURE LATERALE GOUTTIERE END PIECE GUTTER ENDKAPPE DACHRINNE	CR 120 071.6765.XX		
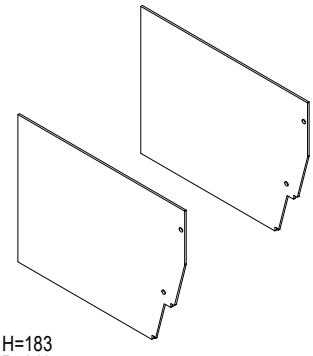 H=183 B=240 D=2.5	071.6765.XX AFDICHTING ZIJKANT GOOT FERMETURE LATERALE GOUTTIERE END PIECE GUTTER ENDKAPPE DACHRINNE	CR 120 007.0876.XX 007.0878.XX 007.0879.04 007.0880.XX 007.0896.XX 0I7.0880.XX		4 st./pc 052.5310.-- DIN 7981 4.2 x 16 2 st./pc 053.5402.-- DIN 7504N 4.2 x 38
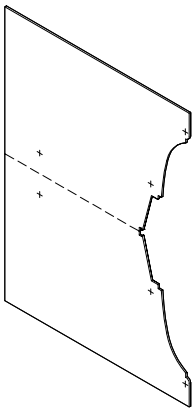 H=366 B=265 D=2	071.6846.04 AFDICHTING ZIJKANT GOOT FERMETURE LATERALE GOUTTIERE END PIECE GUTTER ENDKAPPE DACHRINNE	CR 120 071.6847.XX		
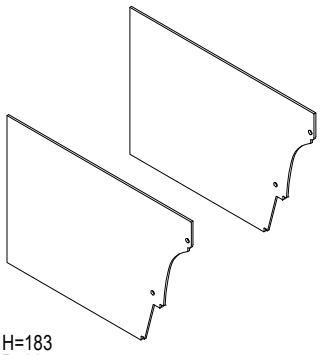 H=183 B=265 D=2.5	071.6847.XX AFDICHTING ZIJKANT GOOT FERMETURE LATERALE GOUTTIERE END PIECE GUTTER ENDKAPPE DACHRINNE	CR 120 007.0876.XX 007.0878.XX 007.0879.04 007.0880.XX 007.0883.XX 0I7.0880.XX TR 200 BOREALE		4 st./pc 052.5310.-- DIN 7981 4.2 x 16 2 st./pc 053.5402.-- DIN 7504N 4.2 x 38

D0041357

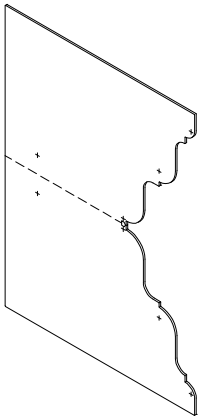 H=406 B=295.2 D=2	071.6758.04 AFDICHTING ZIJKANT GOOT FERMETURE LATERALE GOUTTIERE END PIECE GUTTER ENDKAPPE DACHRINNE	CR 120 071.6759.XX		
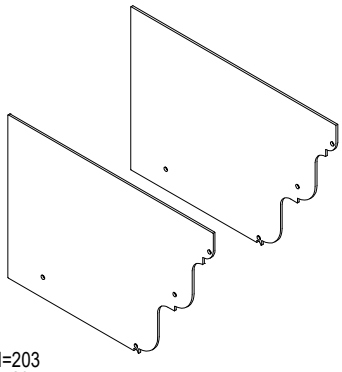 H=203 B=295 D=2.5	071.6759.XX AFDICHTING ZIJKANT GOOT FERMETURE LATERALE GOUTTIERE END PIECE GUTTER ENDKAPPE DACHRINNE	CR 120 007.0869.XX 007.0879.04 0I7.0880.XX		6 st./pc 052.5310.-- DIN 7981 4.2 x 16 2 st./pc 053.5402.-- DIN 7504N 4.2 x 38

D0041358

AFDICHTING ZIJKANT GOOT
FERMETURE LATERALE GOUTTIERE
END PIECE GUTTER
ENDKAPPE DACHRINNE

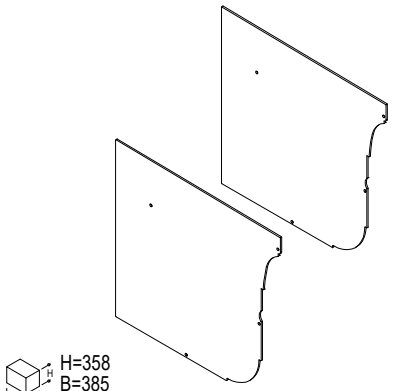 H=358 B=385 D=3	071.6744.XX AFDICHTING ZIJKANT GOOT + ROLLUIK FERMETURE LATERAL GOUTTIERE + VOLET ROULANT END PIECE GUTTER + ROLLER SHUTTER ENDKAPPE DACHRINNE + ROLLADEN	CR 120 007.0872.XX 007.0873.XX 007.0874.XX 007.0875.XX 007.0883.XX TR 200 BOREALE		8 st./pc 052.5310.-- DIN 7981 4.2 x 16
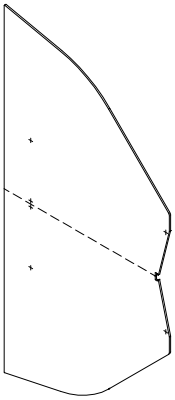 H=496 B=257.2 D=2	071.6761.04 AFDICHTING ZIJKANT GOOT FERMETURE LATERALE GOUTTIERE END PIECE GUTTER ENDKAPPE DACHRINNE	CR 120		

D0041359

G

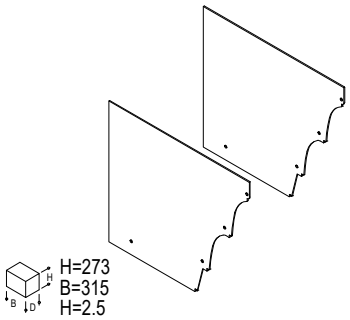 H=273 B=315 H=2.5	071.7018.XX AFDICHTING ZIJKANT GOOT FERMETURE LATERALE GOUTTIERE END PIECE GUTTER ENDKAPPE DACHRINNE	TR 200 007.0883.XX BOREALE 007.0883.XX CR 120 007.0880.XX 007.0883.XX			
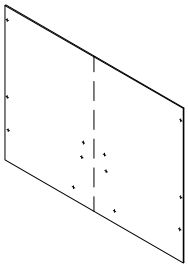	071.7143.04 AFDICHTING ZIJKANT GOOT FERMETURE LATERALE GOUTTIERE END PIECE GUTTER ENDKAPPE DACHRINNE	TR 200 CR 120			
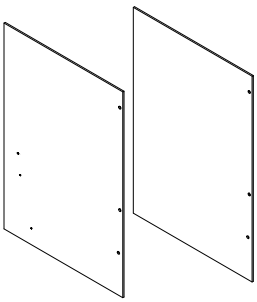	071.7145.XX AFDICHTING ZIJKANT GOOT FERMETURE LATERALE GOUTTIERE END PIECE GUTTER ENDKAPPE DACHRINNE	TR 200 CR 120			

D0070375

AFDICHTING ZIJKANT GOOT
FERMETURE LATERALE GOUTTIERE
END PIECE GUTTER
ENDKAPPE DACHRINNE

Reynaers Aluminium

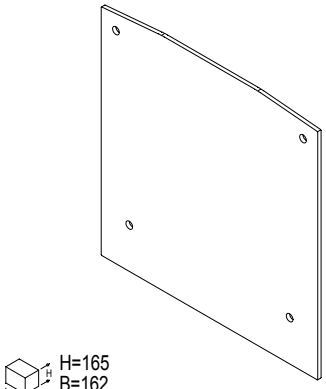

H=165
B=162
D=2.5

071.7020.XX

AFDICHTING LIGGER
FLASQUE D'ETANCHEITE CHEVRON
CLOSER RAFTER
ABDICHTUNG SPARREN

CR 120
007.1851.XX

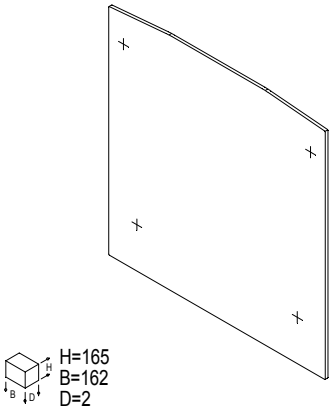

H=165
B=162
D=2

071.7021.04

AFDICHTING LIGGER
FLASQUE D'ETANCHEITE CHEVRON
CLOSER RAFTER
ABDICHTUNG SPARREN

CR 120
071.7020.XX

D0070257

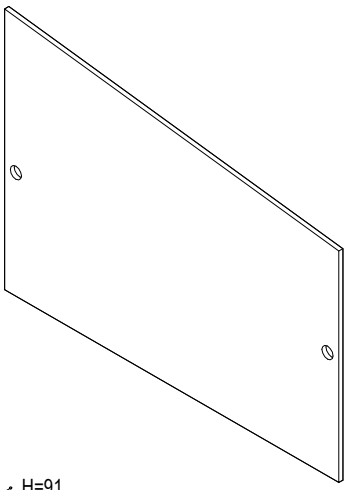 H=91 B=125 D=1.5	071.6912.XX AFDICHTING ZIJKANT GOOT FERMETURE LATERALE GOUTTIERE END PIECE GUTTER ENDKAPPE DACHRINNE	CR 120 021.4580.XX TR 200		2 st./pc 052.5310.-- DIN 7981 4.2 x 16
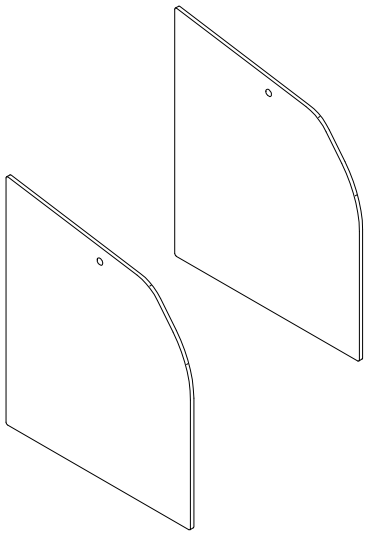	071.6976.XX AFDICHTING ZIJKANT MUURPROFIEL FERMETURE LATERALE COTE PROFILE MURAL END PIECE SIDE WALL PROFILE ENDKAPPE SEITE MAUERPROFIL	CR 120 007.1820.XX 007.1821.XX		2 st./pc 052.5310.-- DIN 7981 4.2 x 16

D0041360

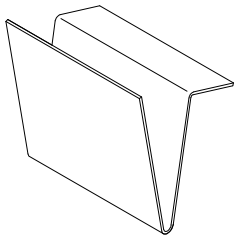 B=50	071.6816.-- KLEMSTUK 16MM CLIP 16MM CLIP 16MM BEFESTIGUNGSKLOTZ 16MM	CR 120 007.0804.01 007.0805.01 007.0806.01 007.0807.01		
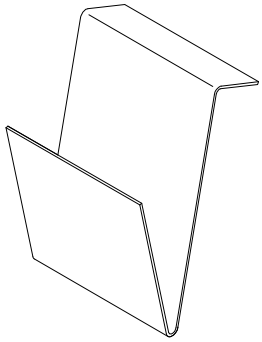 B=50	071.6819.-- KLEMSTUK 32MM CLIP 32MM CLIP 32MM BEFESTIGUNGSKLOTZ 32MM	CR 120 007.0804.01 007.0805.01 007.0806.01 007.0807.01		

D0041361

UITLOOP DAKGOOT
CREPINE GOUTTIERE
CONNECTION PIECE GUTTER DRAINPIPE
REGENABFUEHRABSCHLUSS DACHRINNE

Reynaers Aluminium

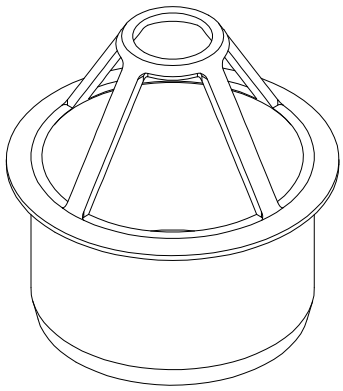

H=90
Ø80

021.5532.07

UITLOOP DAKGOOT 80MM
CREPINE GOUTTIERE 80MM
CONNECTION PIECE GUTTER DRAINPIPE 80MM
REGENABFUEHRABSCHLUSS DACHRINNE 80MM

CR 120
007.0862.XX
007.0872.XX
007.0876.XX
007.0880.XX
021.4580.XX

BOREALE
TR 200

PR 100

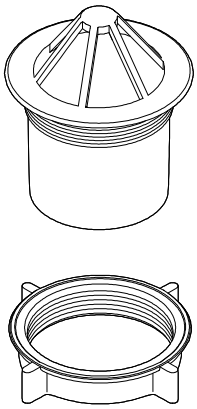

H=100
Ø80-100

071.6900.07

UITLOOP DAKGOOT
CREPINE GOUTTIERE
CONNECTION PIECE GUTTER DRAINPIPE
REGENABFUEHRABSCHLUSS DACHRINNE

CR 120
007.0862.XX
007.0872.XX
007.0876.XX
007.0880.XX
021.4580.XX

BOREALE
CW 50
CW 60
TR 200

PR 100

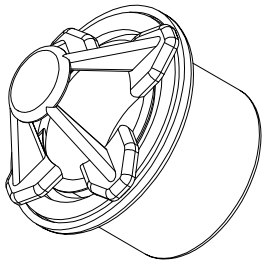

H= 60.5
Ø= 50-65

071.6906.07

UITLOOP DAKGOOT Ø50MM
CREPINE GOUTTIERE Ø50MM
CONNECTION PIECE GUTTER DRAINPIPE Ø50MM
REGENABFUEHRABSCHLUSS DACHRINNE Ø50MM

BOREALE
CR 120
CW 50
CW 60
HFP 147
HFP 179
PR 100
TR 200

D0041363

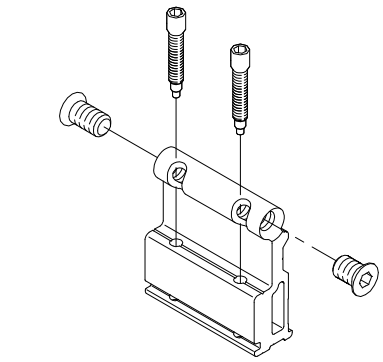 H=55.25 B=51 D=17.9	071.6784.00 T-VERBINDER JONCTION-T T-BRACKET T-VERBINDER	CR 120 007.0862.XX 007.0875.XX 007.0876.XX 007.0880.XX 007.0905.XX 0I7.0880.XX BOREALE TR 200 TR 200-1.0		2 st./pc 050.5094.-- - M8 x 15 2 st./pc 051.5253.-- M5 x 35
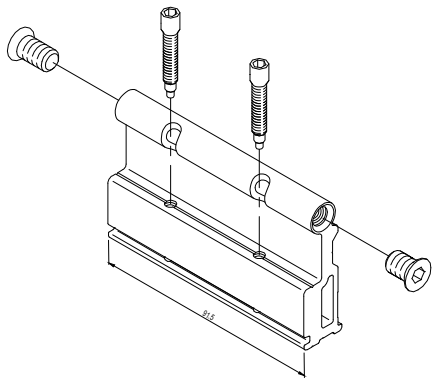 H=55.25 B=91.5 D=17.9	071.6798.00 T-VERBINDER JONCTION-T T-BRACKET T-VERBINDER	CR 120 007.0862.XX 007.0871.XX 007.0875.XX 007.0876.XX 007.0880.XX 007.0971.XX 0I7.0880.XX BOREALE TR 200		2 st./pc 050.5094.-- - M8 x 15 2 st./pc 051.5253.-- M5 x 35
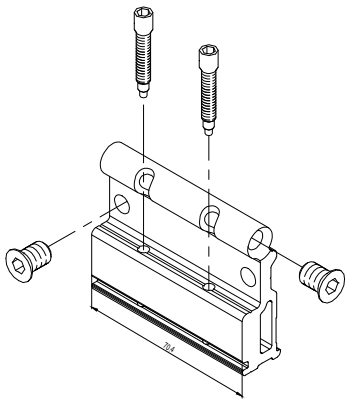 H=55.25 B=70.4 D=17.9	071.6799.00 T-VERBINDER JONCTION-T T-BRACKET T-VERBINDER	CR 120 007.0862.XX 007.0875.XX 007.0876.XX 007.0880.XX 007.1870.XX 0I7.0880.XX BOREALE TR 200		2 st./pc 050.5094.-- - M8 x 15 2 st./pc 051.5253.-- M5 x 35

D0041364

BEVESTIGING DRAGER
FIXATION CHEVRON
FIXATION RAFTER
BEFESTIGUNG DACHSPARREN

Reynaers Aluminium

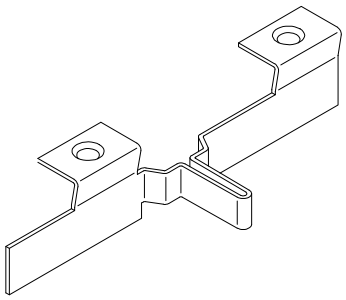 H=25 B=42 D=123	071.7032.-- T-VERBINDER JONCTION-T T-BRACKET T-VERBINDER	CW 60 034.0668.XX TR 200 007.0568.XX CR 120 007.0568.XX 007.0804.01 007.0805.01 007.0806.01 007.0807.01 034.0668.XX		2 st./pc 052.5313.-- DIN 7982 4.2 x 32
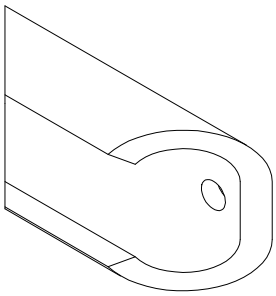 H=26 B=50 D=15	071.7033.00 T-VERBINDER JONCTION-T T-BRACKET T-VERBINDER	CR 120 007.0800.XX 007.0803.XX		1 st./pc 050.5060.-- DIN 965 M6 x 16 2 st./pc 052.5310.-- DIN 7981 4.2 x 16
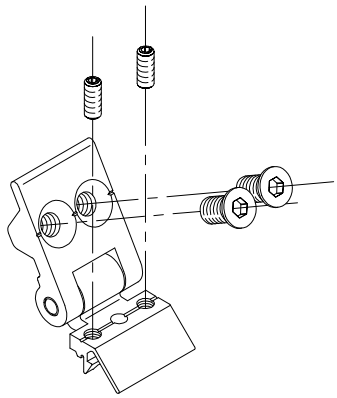 D=31.5	071.7190.00 BEVESTIGING DRAGER FIXATION CHEVRON FIXATION RAFTER BEFESTIGUNG DACHSPARREN	CR 120 007.0832.XX		2 st./pc 051.5277.-- DIN 913 M5 x 16 2 st./pc 050.5094.-- - M8 x 15
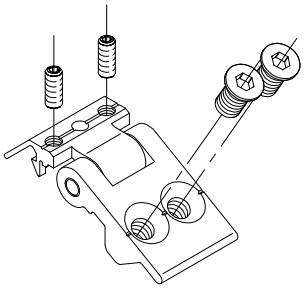 D=31.5	071.7195.00 BEVESTIGING DRAGER FIXATION CHEVRON FIXATION RAFTER BEFESTIGUNG DACHSPARREN	CR 120 007.0832.XX		2 st./pc 051.5277.-- DIN 913 M5 x 16 2 st./pc 050.5094.-- - M8 x 15

D0070087

G

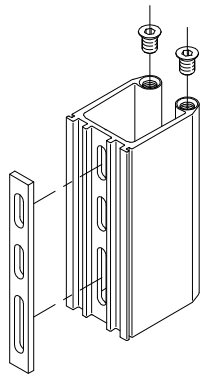 H=122 B=45.4 D=60.3	071.6785.00 T-VERBINDER JONCTION-T T-BRACKET T-VERBINDER	CR 120 007.0850.XX		2 st./pc 050.5094.-- - M8 x 15
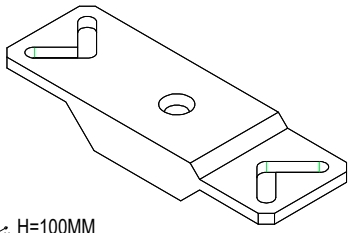 H=100MM B=33MM D=14MM	071.6909.00 BEVESTIGING DRAGER FIXATION CHEVRON FIXATION RAFTER BEFESTIGUNG DACHSPARREN	CR 120 007.1808.XX		1 st./pc 050.5094.-- - M8 x 15
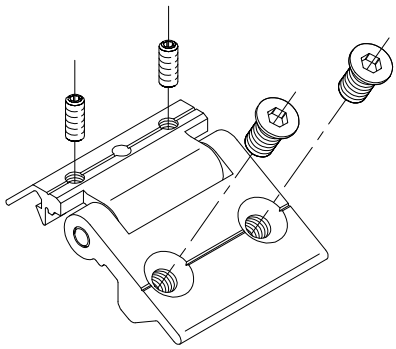 D=55	071.7205.00 BEVESTIGING DRAGER FIXATION CHEVRON FIXATION RAFTER BEFESTIGUNG DACHSPARREN	CR 120 007.0800.XX 007.0802.XX 007.0803.XX 007.0813.XX 007.0892.XX		2 st./pc 050.5094.-- - M8 x 15 2 st./pc 051.5277.-- DIN 913 M6 x 16
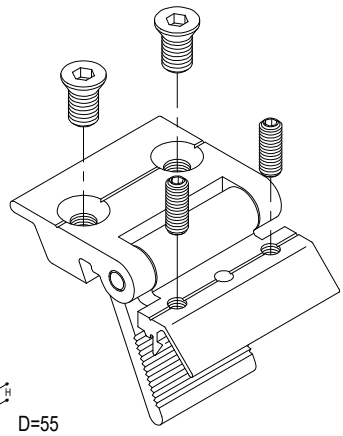 D=55	071.7211.00 BEVESTIGING DRAGER FIXATION CHEVRON FIXATION RAFTER BEFESTIGUNG DACHSPARREN	CR 120 007.0800.XX 007.0802.XX 007.0803.XX 007.0813.XX 007.0881.XX		2 st./pc 050.5094.-- - M8 x 15 2 st./pc 051.5277.-- DIN 913 M6 x 16

D0070093

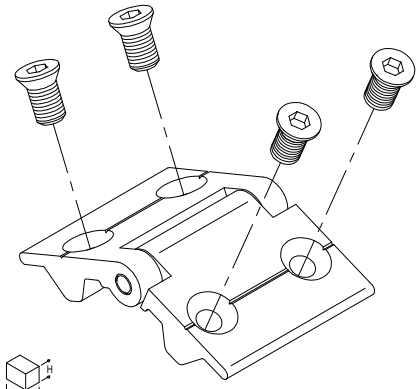 D=55	071.7197.00 BEVESTIGING DRAGER FIXATION CHEVRON FIXATION RAFTER BEFESTIGUNG DACHSPARREN	CR 120 007.0800.XX 007.0802.XX 007.0803.XX 007.0813.XX		4 st./pc 050.5094.-- - M8 x 15
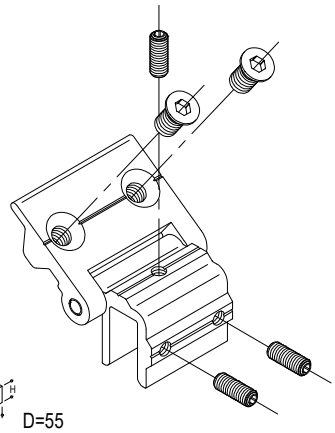 D=55	071.7210.00 BEVESTIGING DRAGER FIXATION CHEVRON FIXATION RAFTER BEFESTIGUNG DACHSPARREN	CR 120 007.0800.XX 007.0802.XX 007.0803.XX 007.0813.XX		3 st./pc 051.5277.-- DIN 913 M5 x 16 2 st./pc 050.5094.-- - M8 x 15
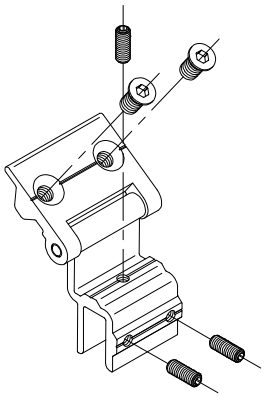 D=55	071.7215.00 BEVESTIGING DRAGER FIXATION CHEVRON FIXATION RAFTER BEFESTIGUNG DACHSPARREN	CR 120 007.0800.XX 007.0802.XX 007.0803.XX 007.0813.XX		3 st./pc 051.5277.-- DIN 913 M5 x 16 2 st./pc 050.5094.-- - M8 x 15

D0070094

BEVESTIGINGSSET
SET DE FIXATION
FIXATION SET
BEFESTIGUNGSSATZ

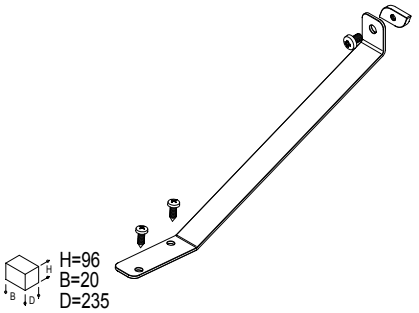 H=96 B=20 D=235	071.7252.XX BEVESTIGINGSSET SET DE FIXATION FIXATION SET BEFESTIGUNGSSATZ	CR 120		st./pc 050.5117.-- 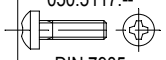 DIN 7985 M5 x 8 2 st./pc 052.5317.-- 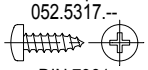 DIN 7981 4.2 x 13
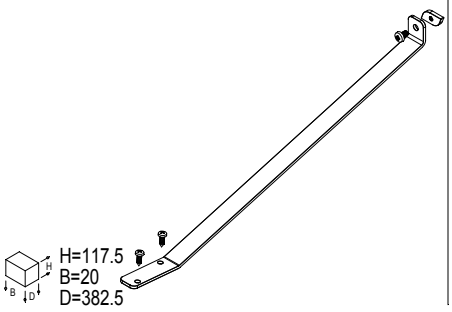 H=117.5 B=20 D=382.5	071.7254.XX BEVESTIGINGSSET SET DE FIXATION FIXATION SET BEFESTIGUNGSSATZ	CR 120		st./pc 050.5117.-- 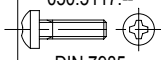 DIN 7985 M5 x 8 2 st./pc 052.5317.-- 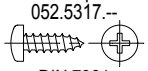 DIN 7981 4.2 x 13

D2001592

G

AFDEKKAP
CAPUCHON
FACE CAP
ABDECKKAPPE

 H=550 B=15 D=15	071.7152.XX AFDEKKAP 90° CAPUCHON 90° FACE CAP 90° ABDECKKAPPE 90°	TR 200 CR 120			
 H=276 B=19 D=2	071.7153.XX AFDEKPLAAT 90° TOLE DE RECOUVREMENT 90° COVER PLATE 90° ABDECKPLATTE 90°	TR 200 CR 120			
 H=550 B=15 D=15	071.7154.XX AFDEKKAP 135° CAPUCHON 135° FACE CAP 135° ABDECKKAPPE 135°	TR 200 CR 120			
 H=217.5 B=26 D=2	071.7155.XX AFDEKPLAAT 135° TOLE DE RECOUVREMENT 135° COVER PLATE 135° ABDECKPLATTE 135°	TR 200 CR 120			

D2001591

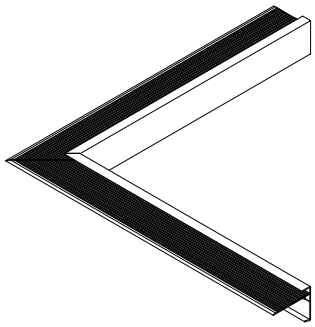	071.6720.XX BINNENHOEK 90° COIN INTERIEUR 90° INNER CORNER 90° INNENECKE 90°	CR 120		
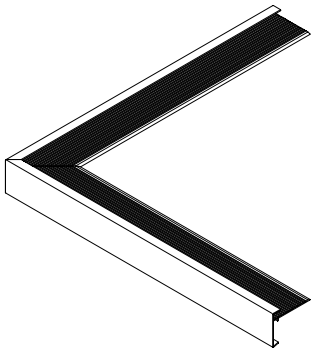	071.6721.XX BUITENHOEK 90° COIN EXTERIEUR 90° OUTER CORNER 90° AUSSENWINKEL 90°	CR 120		
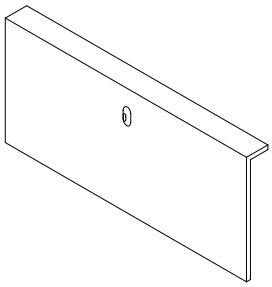	071.6724.XX VERBINDINGSSTUK VOOR AFDEKPROFIEL PIECE DE RACCORDEMENT POUR PROF. DE RECOUVR. CONNECTION PIECE FOR COVERING PROFILE VERBINDUNGSSTUECK FUER ABDECKPROFIL	CR 120 071.6720.XX 071.6721.XX		

D2001518

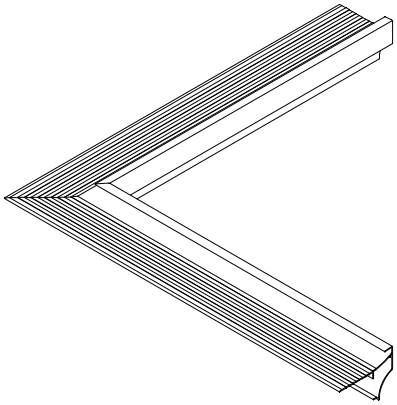	071.6722.XX BINNENHOEK 90° COIN INTERIEUR 90° INNER CORNER 90° INNENECKE 90°	CR 120		
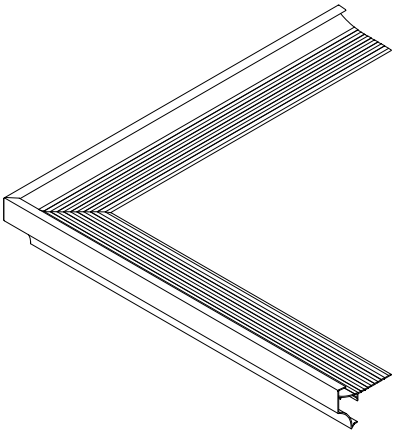	071.6723.XX BUITENHOEK 90° COIN EXTERIEUR 90° OUTER CORNER 90° AUSSENWINKEL 90°	CR 120		
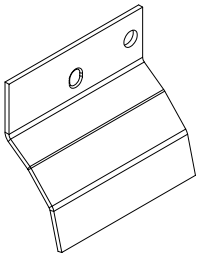	071.6725.XX VERBINDINGSSTUK VOOR AFDEKPROFIEL PIECE DE RACCORDEMENT POUR PROF. DE RECOUVR. CONNECTION PIECE FOR COVERING PROFILE VERBINDUNGSSTUECK FUER ABDECKPROFIL	CR 120 071.6722.XX 071.6723.XX		

D2001519

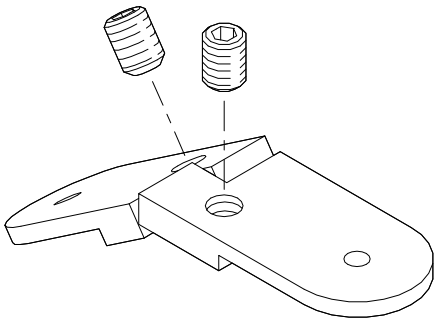	072.6425.00 HOEKVERBINDING VERSTELBAAR EQUERRE REGLABLE CORNER CLEAT ADJUSTABLE ECKWINKEL VERSTELLBAR	CR 120 007.0823.XX 007.0824.XX 007.0861.XX 007.0862.XX 007.0869.XX 007.0872.XX 007.0876.XX 007.0878.XX 007.0880.XX 007.0882.XX 007.0883.XX 007.0896.XX	007.1822.XX BOREALE TR 200 RB 10	
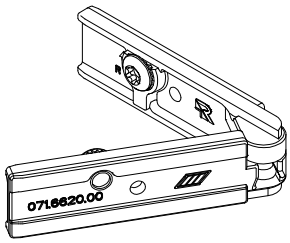	071.6620.00 HOEKVERBINDING VERSTELBAAR EQUERRE REGLABLE CORNER CLEAT ADJUSTABLE ECKWINKEL VERSTELLBAR	CR 120 007.0823.XX 007.0824.XX 007.0861.XX 007.0862.XX 007.0869.XX 007.0872.XX 007.0876.XX 007.0878.XX 007.0880.XX 007.0882.XX 007.0883.XX 007.0896.XX	007.1822.XX BOREALE TR 200 PR 100	
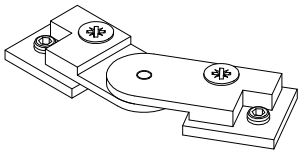 H=5 B=75 D=24	071.6622.00 HOEKVERBINDING VERSTELBAAR EQUERRE REGLABLE CORNER CLEAT ADJUSTABLE ECKWINKEL VERSTELLBAR	CR 120 007.0823.XX 007.0824.XX 007.1822.XX		2 st./pc 050.5130.-- DIN 965 M5 x 10
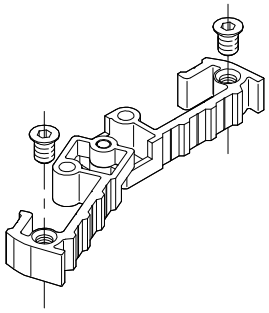	071.6866.00 SCHROEFHOEK VERSTELBAAR EQUERRE A VISSER REGLABLE SCREW CORNER CLEAT ADJUSTABLE SCHRAUBECKWINKEL VERSTELLBAR	CR 120 007.0852.XX 007.0875.XX 007.0876.XX 007.0880.XX 007.1822.XX 0I7.0880.XX BOREALE TR 200		2 st./pc 050.5094.-- - M8 x 15

D0041368

G

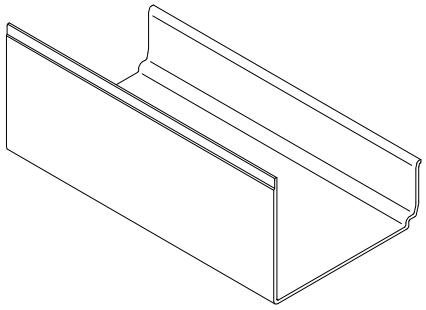

H=82
B=200
D=110

071.7100.00

KOPPELSTUK
PIECE DE RACCORDEMENT
CONNECTION PIECE
KUPPLUNGSSTUECK

CR 120
007.0862.XX
007.0876.XX
007.0878.XX
007.0880.XX

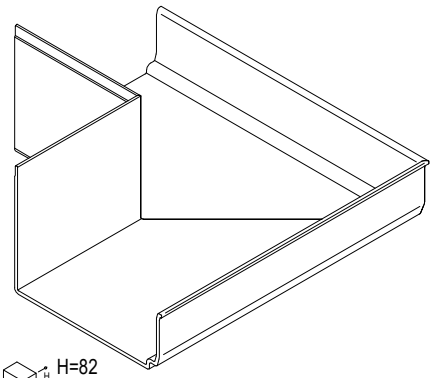

H=82
B=200
B=200

071.7101.00

KOPPELSTUK BUITENHOEK 90°
PIECE DE RACCORDEMENT COIN EXTERIEUR 90°
CONNECTION PIECE OUTER CORNER 90°
KUPPLUNGSSTUECK AUSSENWINKEL 90°

CR 120
007.0862.XX
007.0876.XX
007.0878.XX
007.0880.XX

D0069512

KOPPELSTUK
PIECE DE RACCORDEMENT
CONNECTION PIECE
KUPPLUNGSSTUECK

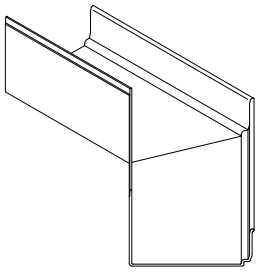 H=82	071.7102.00 KOPPELSTUK BUITENHOEK 135° PIECE DE RACCORDEMENT COIN EXTERIEUR 135° CONNECTION PIECE OUTER CORNER 135° KUPPLUNGSSTUECK AUSSENWINKEL 135°	CR 120 007.0862.XX 007.0876.XX 007.0878.XX 007.0880.XX		
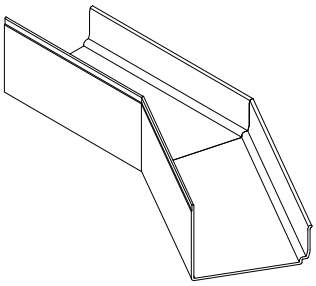 H=82	071.7103.00 KOPPELSTUK BUITENHOEK 150° PIECE DE RACCORDEMENT COIN EXTERIEUR 150° CONNECTION PIECE OUTER CORNER 150° KUPPLUNGSSTUECK AUSSENWINKEL 150°	CR 120 007.0862.XX 007.0876.XX 007.0878.XX 007.0880.XX		
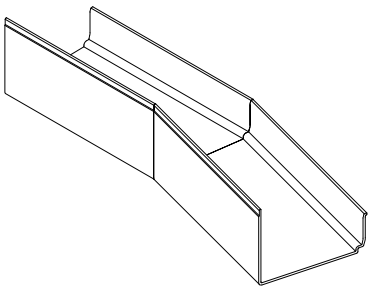 H=82	071.7104.00 KOPPELSTUK BUITENHOEK 165° PIECE DE RACCORDEMENT COIN EXTERIEUR 165° CONNECTION PIECE OUTER CORNER 165° KUPPLUNGSSTUECK AUSSENWINKEL 165°	CR 120 007.0862.XX 007.0876.XX 007.0878.XX 007.0880.XX		
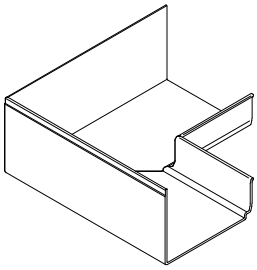 H=82 B=200 D=200	071.7105.00 KOPPELSTUK BINNENHOEK 90° PIECE DE RACCORDEMENT COIN INTERIEUR 90° CONNECTION PIECE INNER CORNER 90° KUPPLUNGSSTUECK INNENWINKEL 90°	CR 120 007.0862.XX 007.0876.XX 007.0878.XX 007.0880.XX		

D0041369

KOPPELSTUK
PIECE DE RACCORDEMENT
CONNECTION PIECE
KUPPLUNGSSTUECK

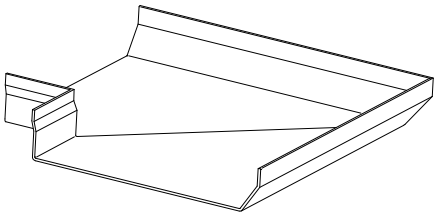	071.6735.00 KOPPELSTUK BUITENHOEK 90° PIECE DE RACCORDEMENT COIN EXTERIEUR 90° CONNECTION PIECE OUTER CORNER 90° KUPPLUNGSSTUECK AUSSENWINKEL 90°	CR 120 007.0872.XX TR 200 BOREALE			
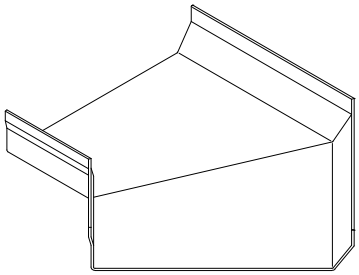	071.6737.00 KOPPELSTUK BUITENHOEK 135° PIECE DE RACCORDEMENT COIN EXTERIEUR 135° CONNECTION PIECE OUTER CORNER 135° KUPPLUNGSSTUECK AUSSENWINKEL 135°	CR 120 007.0872.XX TR 200 BOREALE			
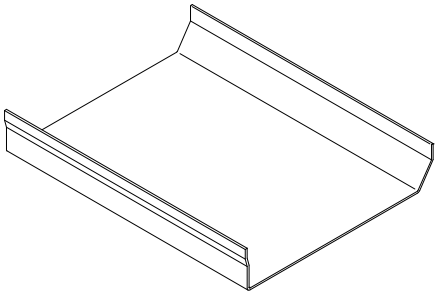 H=46.5 B=200 D=234	071.6739.00 KOPPELSTUK PIECE DE RACCORDEMENT CONNECTION PIECE KUPPLUNGSSTUECK	CR 120 007.0872.XX TR 200 BOREALE			

D0041370

KOPPELSTUK
PIECE DE RACCORDEMENT
CONNECTION PIECE
KUPPLUNGSSTUECK

Reynaers Aluminium

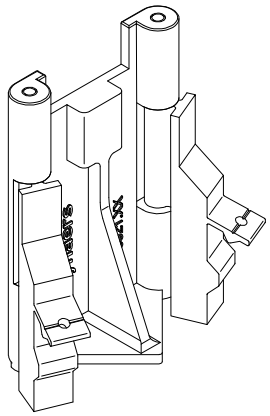

H=109.5
ONLY AVAILABLE IN PAINTED FINISH

071.6820.PA

KOPPELSTUK

PIECE DE RACCORDEMENT

CONNECTION PIECE

KUPPLUNGSSTUECK

CR 120
007.0800.XX
007.0802.XX
007.0803.XX
007.0813.XX
007.0852.XX
007.0862.XX
007.0875.XX
007.0876.XX
007.0880.XX
0I7.0880.XX

TR 200
BOREALE

2 st./pc
052.5310.--
DIN 7981
4.2 x 16

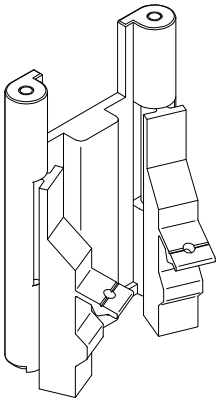

H=109.5
ONLY AVAILABLE IN PAINTED FINISH

071.6820.PA

KOPPELSTUK

PIECE DE RACCORDEMENT

CONNECTION PIECE

KUPPLUNGSSTUECK

CR 120
007.0800.XX
007.0802.XX
007.0803.XX
007.0813.XX
007.0852.XX
007.0862.XX
007.0875.XX
007.0876.XX
007.0880.XX
0I7.0880.XX

TR 200
BOREALE

2 st./pc
052.5310.--
DIN 7981
4.2 x 16

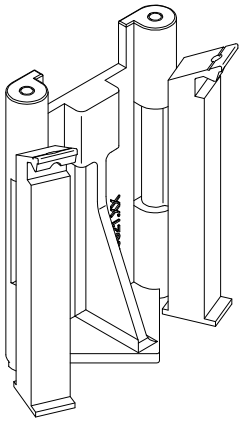

H=109.5
ONLY AVAILABLE IN PAINTED FINISH

071.6830.PA

KOPPELSTUK

PIECE DE RACCORDEMENT

CONNECTION PIECE

KUPPLUNGSSTUECK

CR 120
007.0800.XX
007.0802.XX
007.0803.XX
007.0813.XX
007.1822.XX

2 st./pc
052.5310.--
DIN 7981
4.2 x 16

D0041371

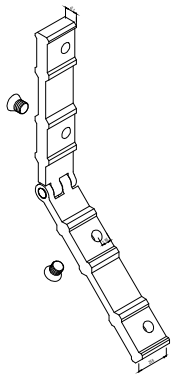

H=134.4
B=134.4
D=25.6

068.8876.00

SCHROEFHOEK VERSTELBAAR
EQUERRE A VISSER REGLABLE
SCREW CORNER CLEAT ADJUSTABLE
SCHRAUBECKWINKEL VERSTELLBAR

CR 120	CS 77-BP	2 st./pc
007.0765.XX	ES 50	050.5091.--
007.0768.XX	CS 86-HI	
	ES 50-AP	-
CS 59	CS 77-Re	M8 x 10
CS 59-Re	CS 77 Optima	
CS 59-So		
CS 68		
CS 68-HV		
CS 68-Re		
CS 68-So		
CW 50		
CW 60		
TR 200		
CS 77		
CS 77-HV		

α	X	α	X
45°	62.3	115	48.1
50	60.1	120	47.6
55	58.4	125	47.2
60	56.8	130	46.7
65	55.5	135	46.3
70	54.4		
75	53.4		
80	52.5		
85	51.7		
90	51		
95	50.3		
100	49.7		
105	49.1		
110	48.6		

BOORMAL
CALIBRE DE PERÇAGE
BORING JIG
BOHRLEHRE
097.0429.00

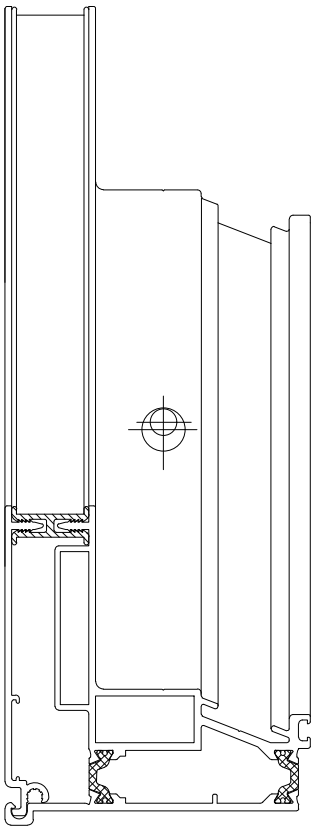

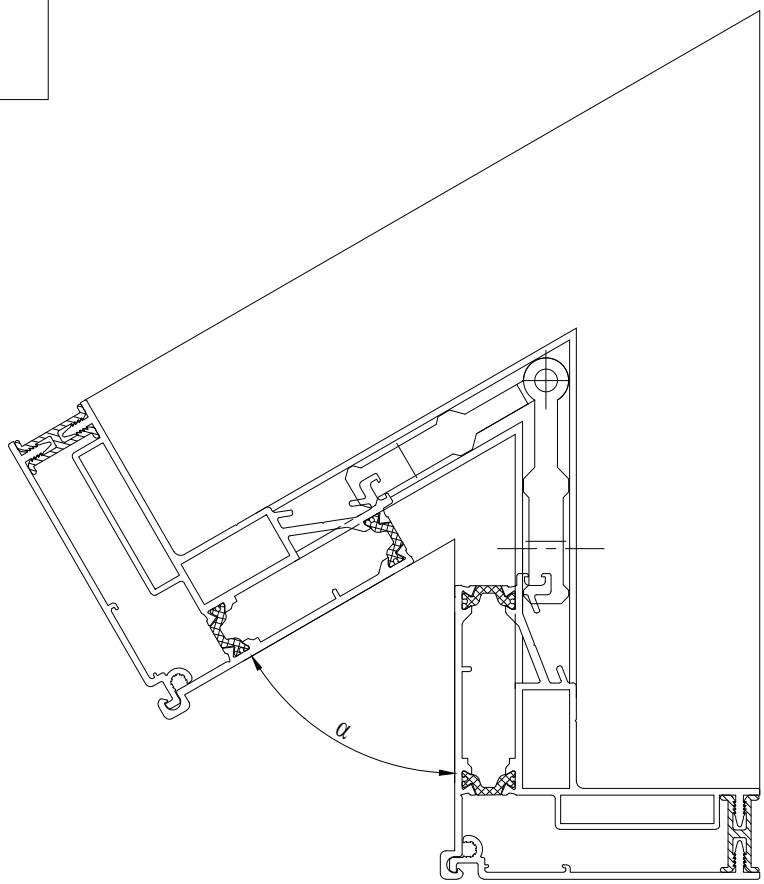

D0041373

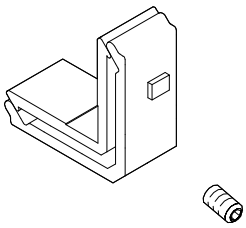 H=56.3 B=56.4 D=25.4	**068.6039.00** SCHROEFHOEK EXCENTRISCH 12.1x25.7 EQUERRE A VISSER EXCENTRIQUE 12.1x25.7 SCREW CORNER CLEAT ECCENTRIC 12.1x25.7 SCHRAUBECKWINKEL EXZENTRISCH 12.1x25.7	CR 120 007.0765.XX 007.0768.XX TS 57 TP 110 TP 138 CW 50 CW 60 PR 200 TR 200		1 st./pc 051.5292.-- DIN 913 M8 x 12
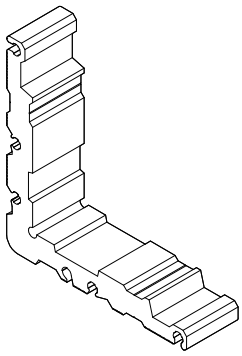 H=86.1 B=84.1 D=25.7	**068.8810.00** PERSHOEK 12.1x25.7 EQUERRE A SERTIR 12.1x25.7 CRIMP CORNER CLEAT 12.1x25.7 PRESSECKWINKEL 12.1x25.7	CR 120 007.0765.XX 007.0768.XX TS 57 TP 110 TP 138 CW 50 CW 60 PR 200 TR 200 TS 57-FV CW 50-FV PS 45 TS 45		
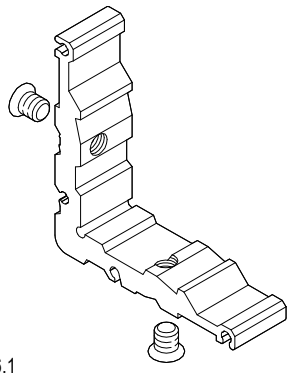 H=86.1 B=84.1 D=25.7	**068.8861.00** SCHROEFHOEK 12.1x25.7 EQUERRE A VISSER 12.1x25.7 SCREW CORNER CLEAT 12.1x25.7 SCHRAUBECKWINKEL 12.1x25.7	CR 120 007.0765.XX 007.0768.XX CW 50 CW 60 PR 200 TR 200 TS 57		2 st./pc 050.5091.-- - M8 x 10

D0041372

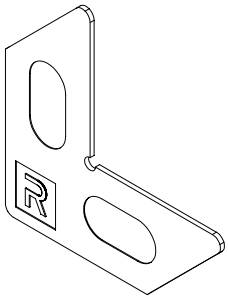 H=107.3 B=107.3 D=1	**060.8723.--** STEUNHOEK CALE DE FEUILLURE REBATE SUPPORT ECKWINKEL	CR 120 007.0766.XX TS 57 CS 59Pa CS 59 CS 59-HV CS 59-Re CS 59-So CS 59-AD CS 59-CD CS 59-SD CS 68 CS 68-HV CS 68-Re CS 68-So TP 110 CP 155 CP 155-LS CW 50 CW 50-HI CW 60 PR 200 TR 200 CS 68-FP CS 77 CS 77-HV CS 77-BP CS 77-FP CP 155-AP CP 155-LS/AP CP 96	CW 60-DRL CP 96-LS CP 96-AP CP 96-LS/AP TP 110-Re Eco system CS 38-SL CS 86-HI CS 38-SL/AP CW 60-HI BS 40
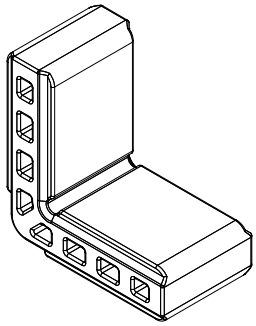 H=43 B=43 D=24.4	**069.6628.04** VULHOEK 24.4x12.7MM EQUERRE DE REMPLISSAGE 24.4x12.7MM CORNER SUPPORT 24.4x12.7MM FUELLECKWINKEL 24.4x12.7MM	CR 120 007.0765.XX CW 50 CW 60 PR 200 TR 200	
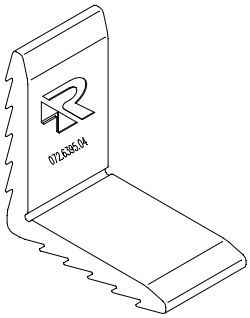 H=40 B=40 D=20	**072.6395.04** HOEKVERBINDER 5.6x20 EQUERRE 5.6x20 CORNER CLEAT 5.6x20 ECKVERBINDER 5.6x20	CR 120 007.0769.XX 007.0770.XX CW 50 CW 60 PR 200 TR 200 MOSQUITO RB 10	

D0041374

G

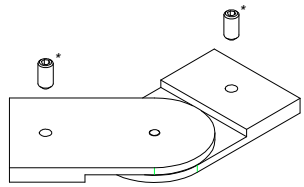

072.6427.00

HOEKVERBINDING VERSTELBAAR

EQUERRE REGLABLE

CORNER CLEAT ADJUSTABLE

ECKWINKEL VERSTELLBAR

CR 120
007.0765.XX
007.1820.XX
007.1821.XX

CW 50
CW 60
TR 200

RB 10

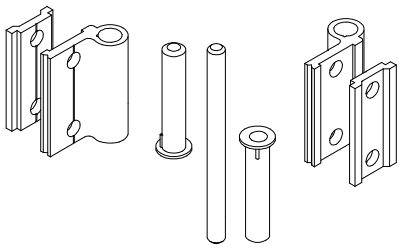

071.6547.17

SCHARNIER DAKRAAM

CHARNIERE TABATIERE

HINGE ATTIC WINDOW

BAND DACHFENSTER

CR 120
007.0765.XX
007.0768.XX

CW 50
TR 200
CW 60

4 st./pc
050.5110.--

DIN 7985
M5 x 8

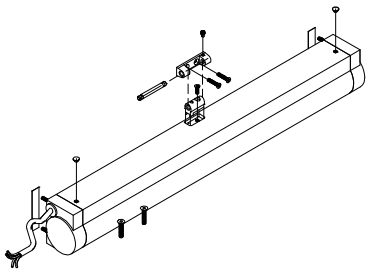

Ca. 1.3A bij volle belasting van 450N
Aux environs de 1.3A en cas d'une charge max. de 450N
About 1.3A in case of max. load of 450N
Ungefähr 1.3A bei einer Maximalbelastung von 450N 24V

071.8443.14

KETTINGMOTOR DAKRAAM 24V

MOTEUR ELECTRIQUE TABATIERE 24V

CHAIN MOTOR ATTIC WINDOW 24V

KETTENANTRIEB DACHFENSTER 24V

CR 120
007.0765.XX
007.0768.XX

CW 50
TR 200
CW 60

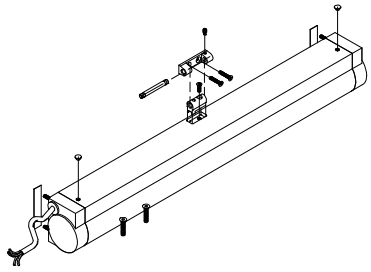

Ca. 1.3A bij volle belasting van 450N
Aux environs de 1.3A en cas d'une charge max. de 450N
About 1.3A in case of max. load of 450N
Ungefähr 1.3A bei einer Maximalbelastung von 450N 24V

071.8444.14

KETTINGMOTOR DAKRAAM 230V

MOTEUR ELECTRIQUE TABATIERE 230V

CHAIN MOTOR ATTIC WINDOW 230V

KETTENANTRIEB DACHFENSTER 230V

CR 120
007.0765.XX
007.0768.XX

CW 50
TR 200
CW 60

D0041375

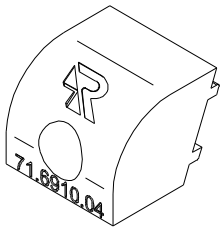 H=20 B=25	071.6910.04 OPLOOPBLOK KUNSTSTOF PATIN MATIERE SYNTHETIQUE SLOPED BLOCK SYNTHETIC AUFLAUFSTUECK KUNSTSTOFF	CR 120 007.0765.XX CW 50 CW 60 PR 200 TR 200		1 st./pc 052.5315.-- DIN 7981 4.2 x 25
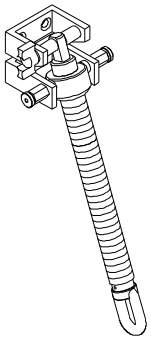	071.8445.17 SPINDEL DAKRAAM VIS SANS FIN TABATIERE SPINDLE ATTIC WINDOW SPINDEL DACHFENSTER	CR 120 007.0765.XX 007.0768.XX CW 50 PR 200 TR 200 CW 60		4 st./pc 050.5161.-- DIN 965 M5 x 16 4 st./pc 057.5711.-- - M5
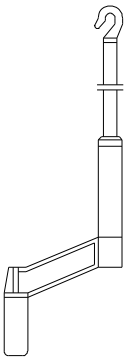	071.8446.-- INHAAKKRUK 1500MM MANIVELLE D'ACCROCHAGE 1500MM CRANK 1500MM EINHAKKURBEL 1500MM	CR 120 071.8445.17 CW 50 PR 200 TR 200 CW 60		

D0041376

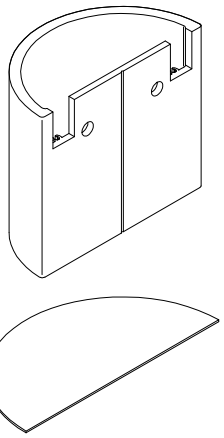

071.6851.XX

NOKBEVESTIGING 180°/150MM
FIXATION DE LA FAITIERE 180°/150MM
FIXATION OF THE RIDGE 180°/150MM
FIRSTANSCHLUSS 180°/150MM

CR 120					
007.0800.XX					
007.0802.XX					
007.0803.XX					
007.0813.XX					

2 st./pc
072.5208.--
DIN 6797
Ø11/6.4

2 st./pc
052.5311.--
DIN 7982
4.2 x 16

2 st./pc
050.5180.--
DIN 912
M6 x 25

2 st./pc
050.5395.--
DIN 934
M6 x 5

H=130
B=75
D=150

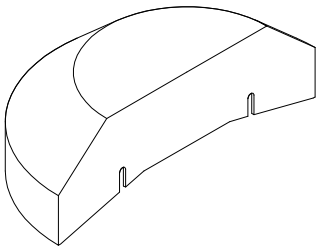

071.6854.PA

AFDEKKAP 180°/240MM
CAPUCHON 180°/240MM
FACE CAP 180°/240MM
ABDECKKAPPE 180°/240MM

CR 120					
071.6851.XX					

2 st./pc
052.5371.--
-
6.3 x 38

Geanodiseerde versie niet verkrijgbaar
Pas disponible version anodisee
Not available in anodised finishing
Nur Einbrennlackiert lieferbar

H=80
B=120
D=240

D0041377

G

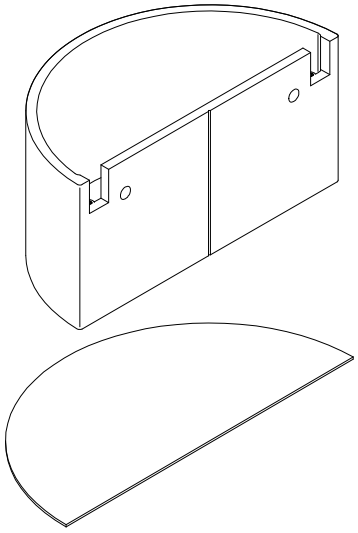

071.6856.XX

NOKBEVESTIGING 180°/270MM
FIXATION DE LA FAITIERE 180°/270MM
FIXATION OF THE RIDGE 180°/270MM
FIRSTANSCHLUSS 180°/270MM

CR 120					
007.0800.XX					
007.0802.XX					
007.0803.XX					
007.0813.XX					

2 st./pc
072.5208.--
DIN 6797
Ø11/6.4

2 st./pc
052.5311.--
DIN 7982
4.2 x 16

2 st./pc
050.5180.--
DIN 912
M6 x 25

2 st./pc
050.5395.--
DIN 934
M6 x 5

2 st./pc
052.5371.--
-
6.3 x 38

H=130
B=135
D=270

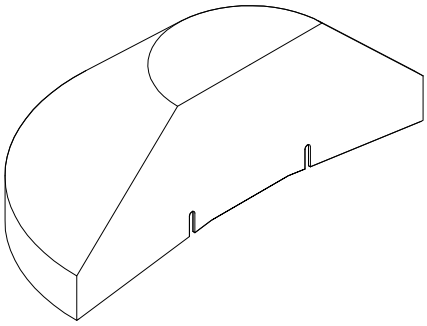

071.6859.PA

AFDEKKAP 180°/360MM
CAPUCHON 180°/360MM
FACE CAP 180°/360MM
ABDECKKAPPE 180°/360MM

CR 120					
071.6856.XX					

2 st./pc
052.5371.--
-
6.3 x 38

Geanodiseerde versie niet verkrijgbaar
Pas disponible version anodisee
Not available in anodised finishing
Nur Einbrennlackiert lieferbar

H=140
B=180
D=360

D0041378

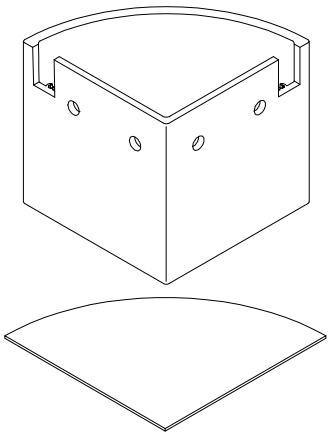

071.6861.XX

NOKBEVESTIGING 90°
FIXATION DE LA FAITIERE 90°
FIXATION OF THE RIDGE 90°
FIRSTANSCHLUSS 90°

CR 120					
007.0800.XX					
007.0802.XX					
007.0803.XX					
007.0813.XX					

st./pc
072.5208.--
DIN 6797
Ø11/6.4

st./pc
052.5311.--
DIN 7982
4.2 x 16

st./pc
050.5180.--
DIN 912
M6 x 25

st./pc
050.5395.--
DIN 934
M6 x 5

H=130
B=135
D=135

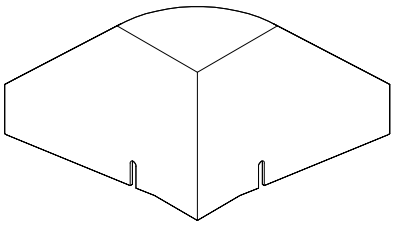

071.6864.PA

AFDEKKAP 90°
CAPUCHON 90°
FACE CAP 90°
ABDECKKAPPE 90°

CR 120					
071.6861.XX					

2 st./pc
052.5371.--
-
6.3 x 38

Geanodiseerde versie niet verkrijgbaar
Pas disponible version anodisee
Not available in anodised finishing
Nur Einbrennlackiert lieferbar

H=140
B=180
D=180

D0041379

NOKBEVESTIGING
FIXATION DE LA FAITIERE
FIXATION OF THE RIDGE
FIRSTANSCHLUSS

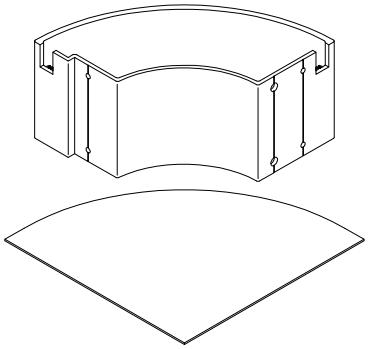

071.6980.XX

NOKBEVESTIGING 90°
FIXATION DE LA FAITIERE 90°
FIXATION OF THE RIDGE 90°
FIRSTANSCHLUSS 90°

CR 120
007.0800.XX
007.0802.XX
007.0803.XX
007.0813.XX

2 st./pc
072.5208.--
DIN 6797
Ø11/6.4

2 st./pc
052.5311.--
DIN 7982
4.2 x 16

2 st./pc
050.5180.--
DIN 912
M6 x 25

2 st./pc
050.5395.--
DIN 934
M6 x 5

H=130
B=280
D=280

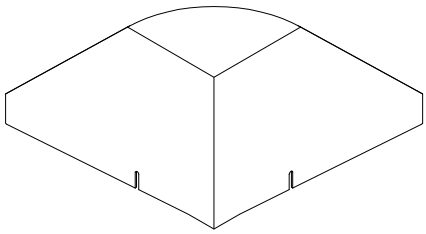

071.6983.PA

AFDEKKAP 90°
CAPUCHON 90°
FACE CAP 90°
ABDECKKAPPE 90°

CR 120
071.6980.XX

2 st./pc
052.5371.--
-
6.3 x 38

Geanodiseerde versie niet verkrijgbaar
Pas disponible version anodisee
Not available in anodised finishing
Nur Einbrennlackiert lieferbar

H=200
B=325
D=325

D0041380

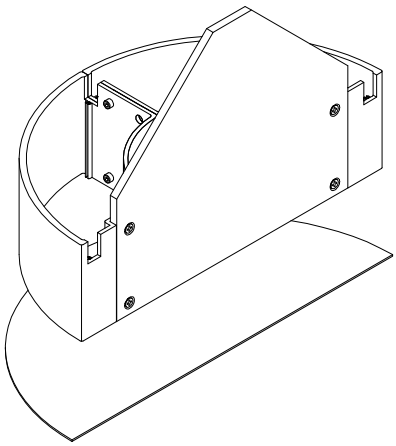

071.6990.XX

NOKBEVESTIGING 180°
FIXATION DE LA FAITIERE 180°
FIXATION OF THE RIDGE 180°
FIRSTANSCHLUSS 180°

CR 120
007.0800.XX
007.0802.XX
007.0803.XX
007.0813.XX

6 st./pc
072.5208.--
DIN 6797
Ø11/6.4

4 st./pc
050.5050.--
DIN 965
M6 x 25

2 st./pc
050.5031.--
DIN 912
M6 x 20

6 st./pc
050.5395.--
DIN 934
M6 x 5

H=317
B=500
D=250

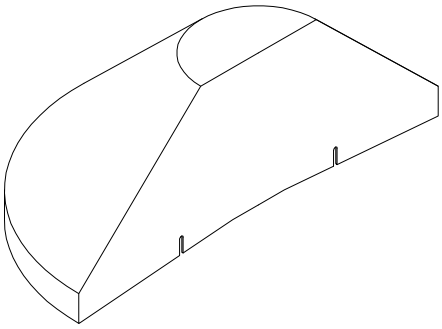

071.6992.PA

AFDEKKAP 180°
CAPUCHON 180°
FACE CAP 180°
ABDECKKAPPE 180°

CR 120
071.6990.XX

2 st./pc
052.5371.--
-
6.3 x 38

Geanodiseerde versie niet verkrijgbaar
Pas disponible version anodisee
Not available in anodised finishing
Nur Einbrennlackiert lieferbar

H=225
B=280
D=560

D0041381

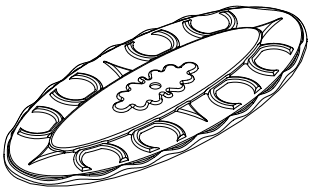 H=7 B=80 D=172 ONLY AVAILABLE IN PAINTED FINISH	071.6345.PA SIERSTUK ELEMENT DECORATIF ORNAMENTAL PIECE ZIERSTUECK	CR 120		1 st./pc 052.5311.-- DIN 7982 4.2 x 16
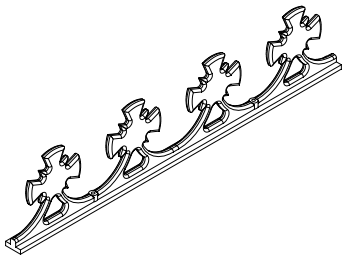 H=115 B=28 D=600 ONLY AVAILABLE IN PAINTED FINISH	071.6346.PA SIERSTUK ELEMENT DECORATIF ORNAMENTAL PIECE ZIERSTUECK	CR 120		1 st./pc 052.5313.-- DIN 7982 4.2 x 32
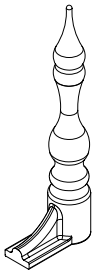 H=245 B=39 D=95 ONLY AVAILABLE IN PAINTED FINISH	071.6347.PA SIERSTUK ELEMENT DECORATIF ORNAMENTAL PIECE ZIERSTUECK	CR 120		1 st./pc 050.5029.-- DIN 912 M6 x 16
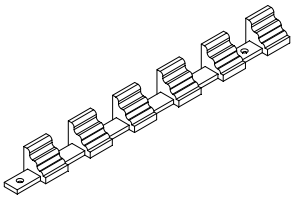 H=40 B=40 D=500 ONLY AVAILABLE IN PAINTED FINISH	071.6348.PA SIERSTUK ELEMENT DECORATIF ORNAMENTAL PIECE ZIERSTUECK	CR 120		1 st./pc 052.5311.-- DIN 7982 4.2 x 16

D0041382

SIERSTUK
ELEMENT DECORATIF
ORNAMENTAL PIECE
ZIERSTUECK

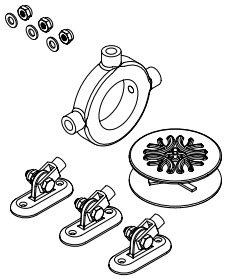 ONLY AVAILABLE IN PAINTED FINISH	071.6349.PA SIERSTUK ELEMENT DECORATIF ORNAMENTAL PIECE ZIERSTUECK	CR 120 PR 100		
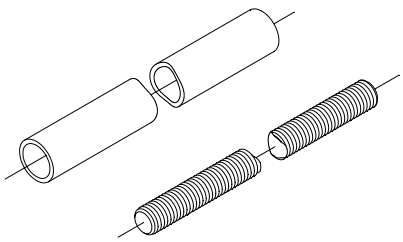 M10/Ø16 D=3000 ONLY AVAILABLE IN PAINTED FINISH	071.6350.PA DRAADSTANG EN AFDEKPROFIEL BARRE FILETEE ET PROFILE DE RECOUVREMENT THREADED ROD AND COVERING PROFILE GEWINDESTANGE UND ABDECKPROFIL	CR 120 PR 100		

D0041383

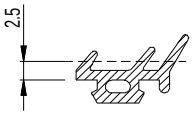 H=8.2 B=8	080.9351.04 BEGLAZINGSDICHTING DROGE BEGLAZING JOINT DE VITRAGE - VITRAGE SEC GLAZING GASKET DRY GLAZING VERGLASUNGSDICHTUNG TROCKENVERGLASUNG	PR 200 TR 200 BOREALE CINTRO CR 120		
 H=80 B=7 D=10	080.9502.04 EINDDICHTING HORIZONTALE PROFIEL JOINT D'ASSEMBLAGE PROFILE HORIZONTAL END GASKET HORIZONTAL PROFILE DICHTUNGSSTUECK RIEGEL	CR 120 007.0568.XX PR 200 TR 200		
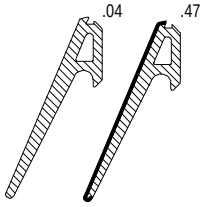 H=48	080.9554.SY DICHTING VERANDA 6-22MM JOINT VERANDA 6-22MM GASKET VERANDA 6-22MM DICHTUNG VERANDA 6-22MM	PR 200 TR 200 CR 120 PR 100		
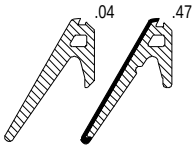 H=33	080.9555.SY DICHTING 23-32MM JOINT 23-32MM GASKET 23-32MM DICHTUNG 23-32MM	PR 200 TR 200 CR 120 PR 100		
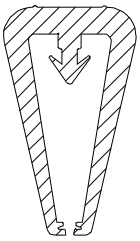 H=30 B=17	080.9560.SY BEGLAZINGSSTRIP DAKBEDEKKING BANDE DE VITRAGE COUVERTURE DU TOIT GLAZING STRIP ROOF-COVERING VERGLASUNGSSTREIFEN DACHDECKUNG	PR 200 TR 200 CR 120		

D0041384

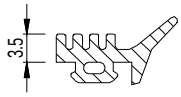 H=9 B=16	080.9540.04 BEGLAZINGSDICHTING DROGE BEGLAZING 3.5MM JOINT DE VITRAGE - VITRAGE SEC 3.5MM GLAZING GASKET DRY GLAZING 3.5MM VERGLASUNGSDICHTUNG TROCKENVERGLASUNG 3.5MM	CW 60-HI PR 100 CW 50-SL CW 50-SG TS 57 TP 110 TP 138 TLS 110 CW 50 CW 50-HI CW 50-HL CW 50-RA CW 60 PR 200 TR 200 BOREALE	CR 120
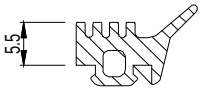 H=10.5 B=16	080.9542.04 BEGLAZINGSDICHTING DROGE BEGLAZING 5.5MM JOINT DE VITRAGE - VITRAGE SEC 5.5MM GLAZING GASKET DRY GLAZING 5.5MM VERGLASUNGSDICHTUNG TROCKENVERGLASUNG 5.5MM	CR 120 CW 60-HI CW 50-SL CW 50-SG TS 57 TP 110 TP 138 TLS 110 CW 50 CW 50-HI CW 50-HL CW 50-RA CW 60 PR 200 TR 200	
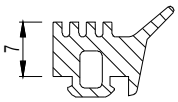 H=12 B=16	080.9543.04 BEGLAZINGSDICHTING DROGE BEGLAZING 7MM JOINT DE VITRAGE - VITRAGE SEC 7MM GLAZING GASKET DRY GLAZING 7MM VERGLASUNGSDICHTUNG TROCKENVERGLASUNG 7MM	CW 50-SL CW 50-SG CR 120 TR 200 TS 57 TP 110 TP 138 TLS 110 CW 50 CW 50-HI CW 50-HL CW 60 PR 200	
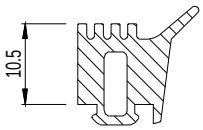 H=15.5 B=16	080.9544.04 BEGLAZINGSDICHTING DROGE BEGLAZING 10.5MM JOINT DE VITRAGE - VITRAGE SEC 10.5MM GLAZING GASKET DRY GLAZING 10.5MM VERGLASUNGSDICHTUNG TROCKENVERGLASUNG 10.5MM	CW 50-SL CW 50-SG CW 60-HI CR 120 TS 57 TP 110 TP 138 TLS 110 CW 50 CW 50-HI CW 50-HL CW 60 PR 200 TR 200	

D0041385

.04 .N4 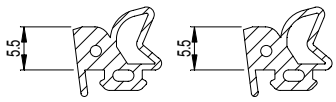 .N4 = NOT SILICONISED H=11.8 B=11.2	**080.9509.SY** BEGLAZINGSDICHTING HOEK REGELBAAR 5.5MM JOINT DE VITRAGE EQUERRE REGLABLE 5.5MM GLAZING GASKET CORNER CLEAT ADJUSTABLE 5.5MM VERGLASUNGDICHTUNG ECKWINKEL VERSTELLBAR 5.5MM	CW 50 034.2534.00 CW 60 034.3016.00 034.3017.00 034.3633.XX 034.3634.00 034.3635.00 CR 120 034.1036.00 CW 60-SG 034.3634.00 034.3635.00	CW 60-SC 034.3634.00 034.3635.00 CW 60-HI 034.3634.00 034.3635.00 CW 60-HL 034.3634.00 034.3635.00 CW 50-HI CW 50-RA PR 100
.04 .47 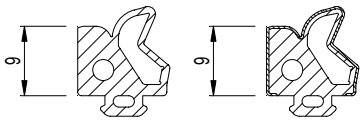 H=14.5 B=12.2	**080.9514.SY** BEGLAZINGSDICHTING HOEK REGELBAAR 9MM JOINT DE VITRAGE EQUERRE REGLABLE 9MM GLAZING GASKET CORNER CLEAT ADJUSTABLE 9MM VERGLASUNGDICHTUNG ECKWINKEL VERSTELLBAR 9MM	CW 50 CW 50-RA CW 60 CR 120 CW 50-SC CW 50-SG CW 60-SG CW 60-SC	
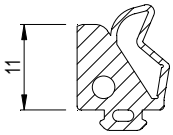 H=16.6 B=12.2	**080.9515.04** BEGLAZINGSDICHTING HOEK REGELBAAR 11MM JOINT DE VITRAGE EQUERRE REGLABLE 11MM GLAZING GASKET CORNER CLEAT ADJUSTABLE 11MM VERGLASUNGDICHTUNG ECKWINKEL VERSTELLBAR 11MM	CW 50 CW 50-RA CW 60 CR 120 CW 50-SC CW 50-SG CW 60-SG CW 60-SC	

D0070103

.04 .47 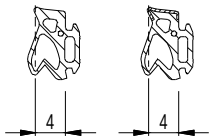 H=10 B=9	080.9114.SY BUITENBEGLAZINGSDICHTING 4MM JOINT DE VITRAGE EXTERIEUR 4MM OUTER GLAZING GASKET 4MM AUSSENVERGLASUNGSDICHTUNG 4MM	CS 24-SL/AP TS 57 CS 59Pa CS 59 CS 59-Re CS 59-So CS 68 CS 68-Re CS 68-So VISION 50 TP 110 TP 138 TLS 110 CP 155 CR 120 CS 77	CS 59-AP CS 68-AP CS 77-AP CS 77-BP CP 96 CP 45Pa CP 96-LS CP 96-AP CP 96-LS/AP TP 110-Re Eco system CS 38-SL Eco system-AP CS 38-SL/AP CS 24-SL
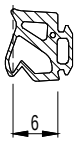 H=10 B=11	080.9116.04 BUITENBEGLAZINGSDICHTING 6MM JOINT DE VITRAGE EXTERIEUR 6MM OUTER GLAZING GASKET 6MM AUSSENVERGLASUNGSDICHTUNG 6MM	CS 24-SL/AP TS 57 CS 59Pa CS 59 CS 59-Re CS 59-So CS 68 CS 68-Re CS 68-So VISION 50 TP 110 TP 138 TLS 110 CP 155 CR 120 CS 77	CS 59-AP CS 68-AP CS 77-AP CS 77-BP CP 96 CP 45Pa CP 96-LS CP 96-AP CP 96-LS/AP TP 110-Re Eco system CS 38-SL Eco system-AP CS 38-SL/AP CS 24-SL
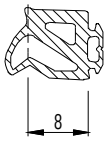 H=10 B=13	080.9118.04 BUITENBEGLAZINGSDICHTING 8MM JOINT DE VITRAGE EXTERIEUR 8MM OUTER GLAZING GASKET 8MM AUSSENVERGLASUNGSDICHTUNG 8MM	CS 38-SL/AP TS 57 CS 59Pa CS 59 CS 59-Re CS 59-So CS 68 CS 68-Re CS 68-So VISION 50 TP 110 TP 138 TLS 110 CP 155 CR 120 CS 77	CS 59-AP CS 68-AP CS 77-AP CS 77-BP CP 96 CP 96-LS CP 96-AP CP 96-LS/AP TP 110-Re Eco system CS 38-SL Eco system-AP
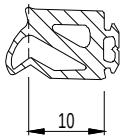 H=10 B=15	080.9120.04 BUITENBEGLAZINGSDICHTING 10MM JOINT DE VITRAGE EXTERIEUR 10MM OUTER GLAZING GASKET 10MM AUSSENVERGLASUNGSDICHTUNG 10MM	CS 38-SL/AP TS 57 CS 59Pa CS 59 CS 59-Re CS 59-So CS 68 CS 68-Re CS 68-So VISION 50 TP 110 TP 138 TLS 110 CP 155 CR 120 CS 77	CS 59-AP CS 68-AP CS 77-AP CS 77-BP CP 96 CP 96-LS CP 96-AP CP 96-LS/AP TP 110-Re Eco system CS 38-SL Eco system-AP

D0041386

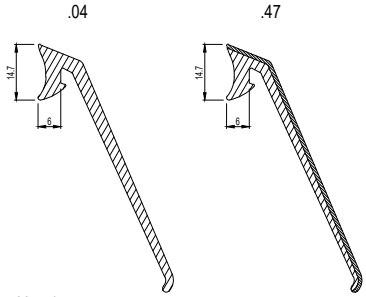 H=74	080.9005.SY AFDICHTING MUURPROFIEL ETANCHEITE PROFILE MURAL SEALING WALL SECTION ABDICHTUNG MAUERPROFIL	CR 120		
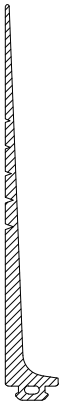 H=75 B=10	080.9006.04 DICHTING JOINT GASKET DICHTUNG	CR 120 007.0852.XX 007.0862.XX 007.0872.XX 007.0876.XX 007.0878.XX 007.0880.XX 007.1885.XX 007.1886.XX TR 200 BOREALE		
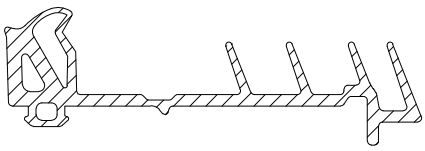 H=18.2 B=55	080.9008.04 BEGLAZINGSDICHTING JOINT DE VITRAGE GLAZING GASKET VERGLASUNGSDICHTUNG	CR 120 007.0805.01 007.0807.01		
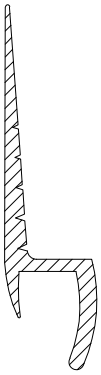 H=60 B=15	080.9009.04 BEGLAZINGSDICHTING JOINT DE VITRAGE GLAZING GASKET VERGLASUNGSDICHTUNG	CR 120		

D0041389

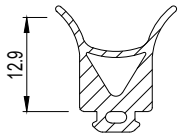 H=16.6 B=16	080.9328.04 BEGLAZINGSDICHTING JOINT DE VITRAGE GLAZING GASKET VERGLASUNGSDICHTUNG	CR 120		
.04 .N4 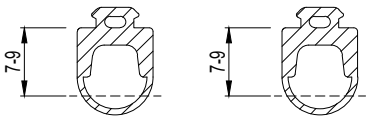 .N4 = NOT SILICONISED H=13.2 B=10	080.9426.SY AANSLAGDICHTING 9MM JOINT DE BUTEE 9MM BUTT STRIP 9MM ANSCHLAGDICHTUNG 9MM	CR 120		
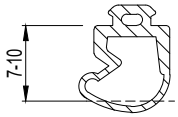 H=14.2 B=12	080.9429.04 AANSLAGDICHTING 9MM JOINT DE BUTEE 9MM BUTT STRIP 9MM ANSCHLAGDICHTUNG 9MM	CR 120		
 H=7.7 B=8	080.9430.04 AANSLAGDICHTING JOINT DE BUTEE BUTT STRIP ANSCHLAGDICHTUNG	CR 120 007.0765.XX 007.0768.XX TP 110 CW 50 CW 60 TR 200 CP 96-LS CP 96-LS/AP TP 110-Re Eco system Eco system-AP CP 130 CP 130-LS	CP 155 CP 155-LS	

D0041388

DICHTING
JOINT
GASKET
DICHTUNG

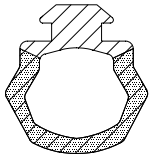	080.9452.04 AKOESTISCHE DICHTING JOINT ACOUSTIQUE ACOUSTIC GASKET SCHALLDICHTUNG	CR 120 CS 68 Optima		
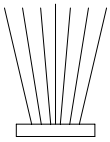  H=8.75 B=4.8	081.9026.07 BORSTELDICHTING 8.5MM JOINT-BROSSE 8.5MM WOOLPILE 8.5MM BUERSTENDICHTUNG 8.5MM	CS 59Pa CS 59Pa-AD CS 59-AD CR 120 ES 50		

D0070115

DICHTING
JOINT
GASKET
DICHTUNG

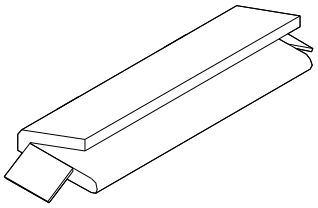	021.5146.07 100 CLIPS VR.BEVEST.AFWERK.PR. SACHET 100 CLIPS HABILLAGE EXT 100 CLIPS FIXATION FACE CAPS 100 KLIPPE BEFEST.ABDECKPROF.	GP 51 HIFI TONIC TEMPO Th TS 57-FV CR 120 CP 50 CP 45Pa	
	080.9010.04 BEGLAZINGSDICHTING JOINT DE VITRAGE GLAZING GASKET VERGLASUNGSDICHTUNG	CR 120	
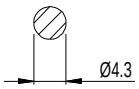	080.9381.04 DICHTING Ø4MM JOINT Ø4MM GASKET Ø4MM DICHTUNG Ø4MM	CS 59 CW 50 CW 50-HI CW 50-HL CW 50-RA CW 60 CW 50-SC CW 50-SG CW 60-SG CW 50-SL Eco system Eco system-AP CS 24-SL CW 60-SC CW 60-HI CW 60-HL CS 24-SL/AP PS 45 TS 45 PS 50 TS 50 TS 57 CS 59Pa CS 59-HV CS 59-Re CS 59-So	CS 68 CS 68-HV CS 68-Re CS 68-So VISION 50 TP 110 TP 138 TLS 110 CP 155 CP 155-LS PR 200 TR 200 BOREALE CR 120 CS 77 CW 86 CS 77-HV REYNASCREEN CP 96 CW 86-EF CP 96-LS TP 110-Re CS 38-SL CS 38-SL/AP PR 100
.04 .47 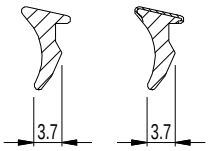	080.9505.SY DICHTING JOINT GASKET DICHTUNG	AV 40 CW 50 CW 60 CR 120 GP 51	

D0070108

VULSTUKKEN ISOLEREND
PIECES DE REMPLISSAGE ISOLANTES
FILLING PIECES INSULATING
FUELLSTUECKE ISOLEREND

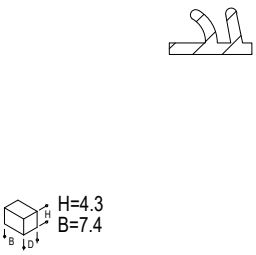 H=4.3 B=7.4	022.3036.04 DICHTING JOINT GASKET DICHTUNG	HIFI BOREALE CW 86 CP 50 CP 45Pa CW 50-FV GP 51 CS 24-SL CS 45Pa CD 45Pa CP 50 (GR) CP 45Pa (GR) CP 68 XS 68 ES 45Pa CF 68	CP 68-IN	
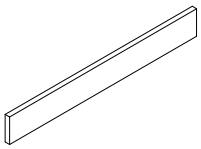 H=58.6 B=10 D=1000	087.9752.01 ISOLEREND VULSTUK 10x58.6MM PIECE DE REMPLISSAGE ISOLEE 10x58.6MM INSULATING FILLING PIECE 10x58.6MM ISOLIERENDES FUELLSTUECK 10x58.6MM	CR 120 007.0876.XX		
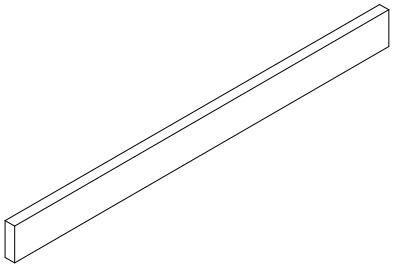 H=84 B=25 D=1000	087.9754.01 ISOLEREND VULSTUK 25x84 PIECE DE REMPLISSAGE ISOLEE 25x84 INSULATING FILLING PIECE 25x84 ISOLIERENDES FUELLSTUECK 25x84	CR 120 007.0832.XX		

D0041391

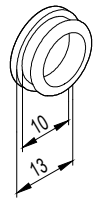 B= 7 D= 10/13	**065.6555.04** STOP Ø 10MM BOUCHE-TROU Ø 10MM PLUG Ø 10MM VERSCHLUSSKAPPE Ø 10MM	CS 59Pa CS 59 CS 68 VISION 50 TP 110 CP 130 CP 130-LS CP 155 CP 155-LS CW 60 TR 200 MOSQUITO MEDAS CR 120 CS 77 CS 77-BP	CS 38-SL CS 38-SL/AP PR 100 CW 60-HL CS 104-HI+ CW 50-VL
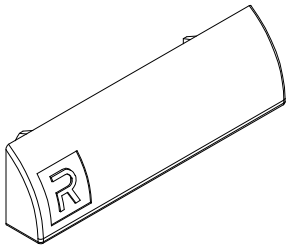 H=13 B=44 D=11.3	**069.6831.XX** AFDEKKAP WATERAFVOERSLEUVEN CAPUCHON DRAINAGE D'EAU WEEP HOLE COVER ABDECKKAPPE ENTWAESSERUNG	CS 59Pa CS 59Pa-AD CS 59Pa-CD CS 59Pa-SD CS 59 CS 59-HV CS 59-Re CS 59-So CS 59-AD CS 59-CD CS 59-SD CS 68 CS 68-HV CS 68-Re CS 68-So TP 110	TLS 110 CP 130 CP 130-LS CP 155 CP 155-LS HFP 147 HFP 179 CS 68-FP CS 77 CS 77-HV CS 59Pa-AP CS 59-AP CS 68-AP CS 77-AP CS 77-BP CS 77-FP
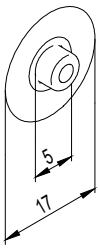 O17 B=5	**071.5440.SY** AFDEKKAP O17MM CAPUCHON O17MM FACE CAP O17MM ABDECKKAPPE O17MM	CW 50 CW 50-RA CW 60 TR 200 CR 120	
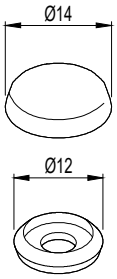 H=9.5 Ø=14	**071.6554.SY** AFDEKKAP CAPUCHON FACE CAP ABDECKKAPPE	TP 110 TLS 110 CP 130 CP 130-LS CP 155 CP 155-LS TR 200 CR 120 CP 155-AP CP 155-LS/AP CP 50 CP 96 CP 96-LS CP 96-AP CP 96-LS/AP MOOREA	TP 110-Re PR 100 CS 45Pa CP 50 (GR) CP 68

D0041392

AFDICHTINGSBAND
JOINT D'ETANCHEITE
SEALING TAPE
ABDICHTUNGSBAND

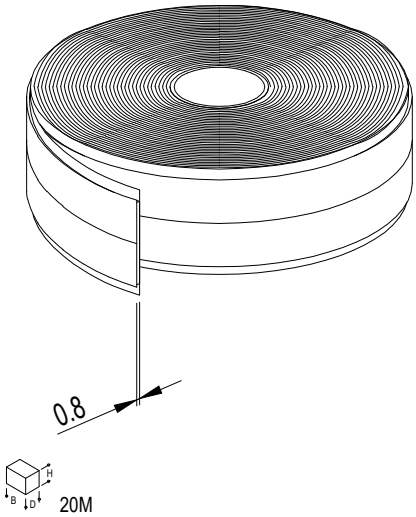 20M	084.9711.04 AFDICHTINGSBAND 45MM JOINT D'ETANCHEITE 45MM SEALING TAPE 45MM ABDICHTUNGSBAND 45MM	CW 50 CW 50-HI CW 50-RA CW 60 TR 200 BOREALE CR 120 TR 200-1.0 PR 100 CW 60-HI CW 65-EF CW 65-EF/SG		
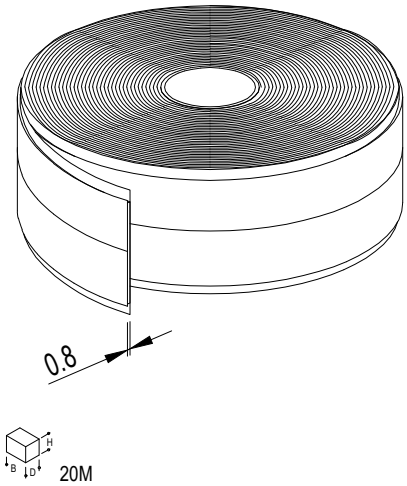 20M	084.9712.04 AFDICHTINGSBAND 55MM JOINT D'ETANCHEITE 55MM SEALING TAPE 55MM ABDICHTUNGSBAND 55MM	CW 50 CW 50-HI CW 50-RA CW 60 TR 200 BOREALE CR 120 TR 200-1.0 PR 100 CW 60-HI CW 65-EF CW 65-EF/SG		
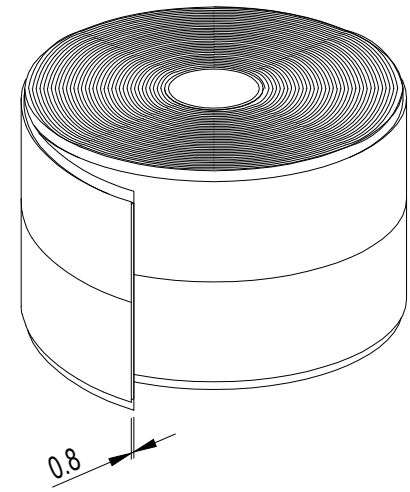 20M	084.9713.04 AFDICHTINGSBAND 100MM JOINT D'ETANCHEITE 100MM SEALING TAPE 100MM ABDICHTUNGSBAND 100MM	CW 50 CW 50-HI CW 50-RA CW 60 TR 200 BOREALE CR 120 TR 200-1.0 PR 100 CW 60-HI CW 65-EF CW 65-EF/SG		

D0041393

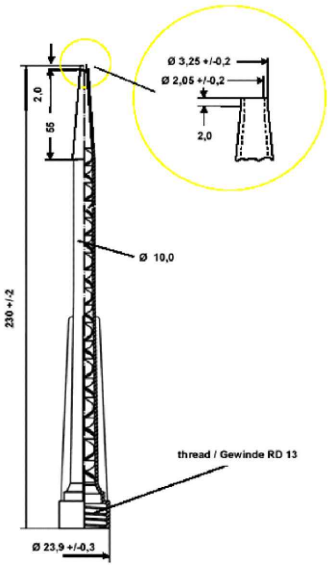

084.9086.--

MENGTUIT VOOR REYNASEAL DUO
PIECE DE MELANGE POUR REYNASEAL DUO
MIXING NOZZLE FOR REYNASEAL DUO
MISCHSTUECK FUER REYNASEAL DUO

550GR

084.9080.--

REYNASEAL DUO
REYNASEAL DUO
REYNASEAL DUO
REYNASEAL DUO

310ML

084.9108.04

VULKANISEERLIJM DICHTINGEN 310ML
COLLE VULCANISANTE JOINTS 310ML
VULCANISING GLUE GASKETS 310ML
VULKANISIERKLEBER DICHTUNGEN 310ML

D0041394

20GR

H
B
D

084.9107.--

SEKONDENLIJM 20g
COLLE RAPIDE 20g
CONTACT GLUE 20g
SEKUNDENKLEBER 20g

MASTERLINE 8-Fu
180.8682.04

D0069478

H=50
B=82
D=20

086.9150.--

ALU GOM VOOR VLEKKEN
GOMME POUR GRIFFES ET TACHES
RUBBING BLOCK
REINIGUNGSPAD FÜR ELOXAL-FLACHEN

500ML

086.9175.--

SNIJMIDDEL-SPRAY 500ML
AEROSOL D'HUILE DE COUPE 500ML
CUTTING SPRAY 500ML
SCHNEIDMITTEL-SPRAY 500ML

CS 77
CW 86

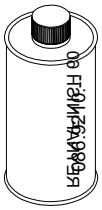

1L

086.9210.--

REYNAFINISH 60 (VOC = 100 %)
REYNAFINISH 60 (VOC = 100 %)
REYNAFINISH 60 (VOC = 100 %)
REYNAFINISH 60 (VOC = 100 %)

500ML

086.9212.--

REYNAWASH COLOR (VOC = 10 %)
REYNAWASH COLOR (VOC = 10 %)
REYNAWASH COLOR (VOC = 10 %)
REYNAWASH COLOR (VOC = 10 %)

500ML

086.9211.--

REYNOVATOR 718
REYNOVATOR 718
REYNOVATOR 718
REYNOVATOR 718

D0041395

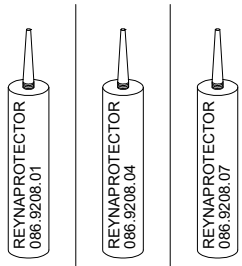

310ML

086.9208.SY

REYNAPROTECTOR SILICONE
REYNAPROTECTOR SILICONE
REYNAPROTECTOR SILICONE
REYNAPROTECTOR SILICONEN

500ML

086.9213.--

REYNAWASH ANO
REYNAWASH ANO
REYNAWASH ANO
REYNAWASH ANO

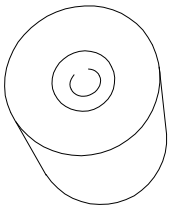

086.9225.--

SCHUIMROL
ROULEAU EN MOUSSE
SCHAUMROLLE
FOAM ROLL

400ML

086.9551.--

SILICONE-SPRAY 400ML
AEROSOL-SILICONE 400ML
SILICONE SPRAY 400ML
SILICONENSPRAY 400ML

D0041396

086.9600.XX

REYNASTICK
REYNASTICK
REYNASTICK
REYNASTICK

D0041397

Xref ..\..\..\..\..\Others\MISCELLANEOUS\13.0129\DVPT01\084.91 H = 1.1 B = 15 L = 10	**084.9115.04** KLEEFBAND 2-ZIJDEN KLEVEND 1,1 X 15 BANDE 2 FACES AUTOCOLLANTES 1,1 X 15 TAPE DOUBLE SIDES SELF-ADHESIVE 1,1 X 15 KLEBENDES BAND BEIDSEITIG 1,1 X 15	CW 50 CW 60 SL 38		
Xref ..\..\..\..\..\Others\MISCELLANEOUS\History\084.9380.--\0849380a.dwg B=10MM L=10M	**084.9380.--** AFDICHTINGSBAND 1 ZIJDE ZELFKLEVEND JOINT D'ETANCHEITE 1 FACE AUTOCOLLANTE SEALING TAPE 1-SIDE SELF-ADHESIVE ABDICHTUNGSBAND EINSEITIG SELBSTKLEBEND			
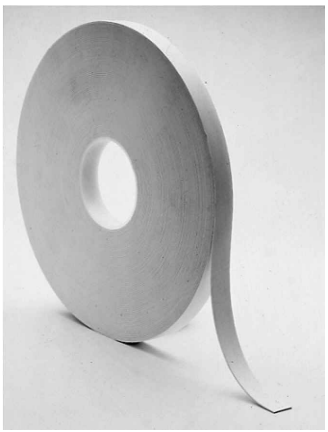 B=19MM L=40M	**084.9480.--** KLEEFBAND 2-ZIJDEN KLEVEND BANDE 2 FACES AUTOCOLLANTES TAPE DOUBLE SIDES SELF-ADHESIVE BEIDSEITIG KLEBENDES BAND			

D0041398

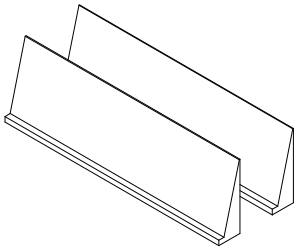

097.0521.00

KLEMBLOKKEN

BLOCS DE SERRAGE

CLAMP BLOCKS

SPANNBACKEN

CR 120
007.0882.XX

TR 200
BOREALE

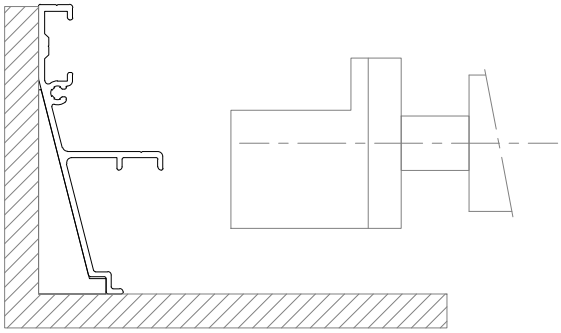

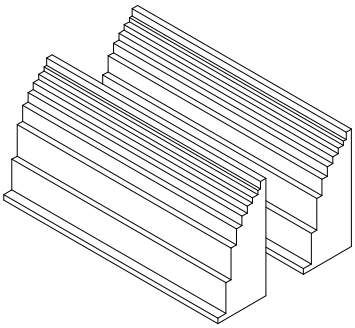

097.0522.00

KLEMBLOKKEN

BLOCS DE SERRAGE

CLAMP BLOCKS

SPANNBACKEN

CR 120
007.0883.XX

TR 200
BOREALE

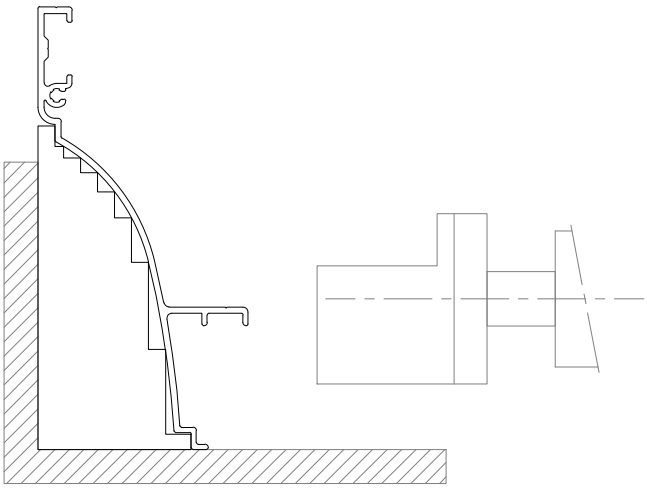

D0041409

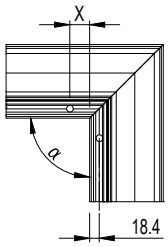

097.0523.00

BOORMAL VARIABELE HOEK

CALIBRE DE PERCAGE EQUERRE VARIABLE

BORING JIG VARIABLE CORNER CLEAT

BOHRLEHRE VARIABELER ECKVERBINDER

CR 120
007.0852.XX
007.0875.XX
007.0876.XX
007.0880.XX
007.1822.XX
0I7.0880.XX

TR 200
BOREALE

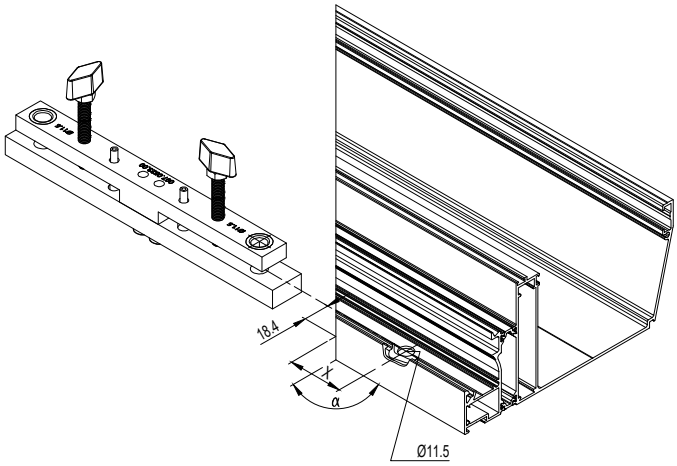

α	X	α	X
90	50.35	185	69.62
95	51.89	190	70.42
100	53.32	195	71.23
105	54.64	200	72.06
110	55.88	205	72.89
115	57.05	210	73.75
120	58.15	215	74.62
125	59.20	220	75.52
130	60.20	225	76.44
135	61.16	230	77.40
140	62.08	235	78.41
145	62.98	240	78.45
150	63.85	245	80.56
155	64.71	250	81.72
160	65.54	255	82.96
165	66.37	260	84.28
170	67.18	265	85.71
175	67.98	270	87.25
180	68.80		

097.0524.00

BOORMAL VARIABELE HOEK

CALIBRE DE PERCAGE EQUERRE VARIABLE

BORING JIG VARIABLE CORNER CLEAT

BOHRLEHRE VARIABELER ECKVERBINDER

CR 120
007.0800.XX
007.0802.XX
007.0803.XX
007.0813.XX

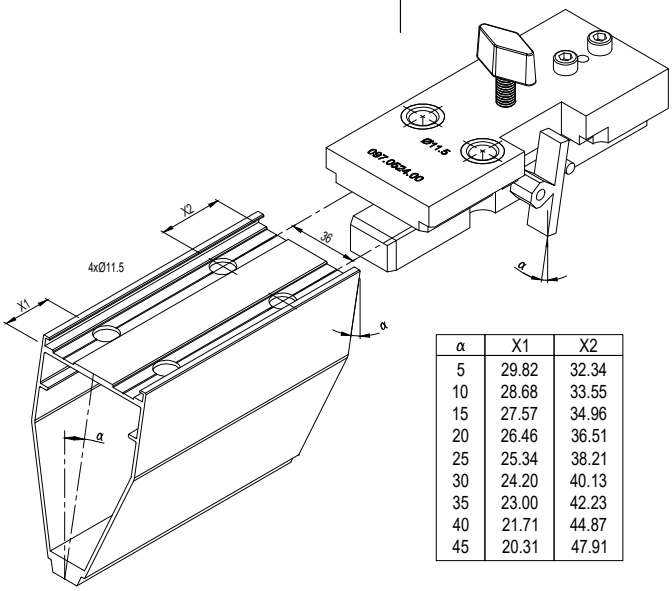

α	X1	X2
5	29.82	32.34
10	28.68	33.55
15	27.57	34.96
20	26.46	36.51
25	25.34	38.21
30	24.20	40.13
35	23.00	42.23
40	21.71	44.87
45	20.31	47.91

D0041410

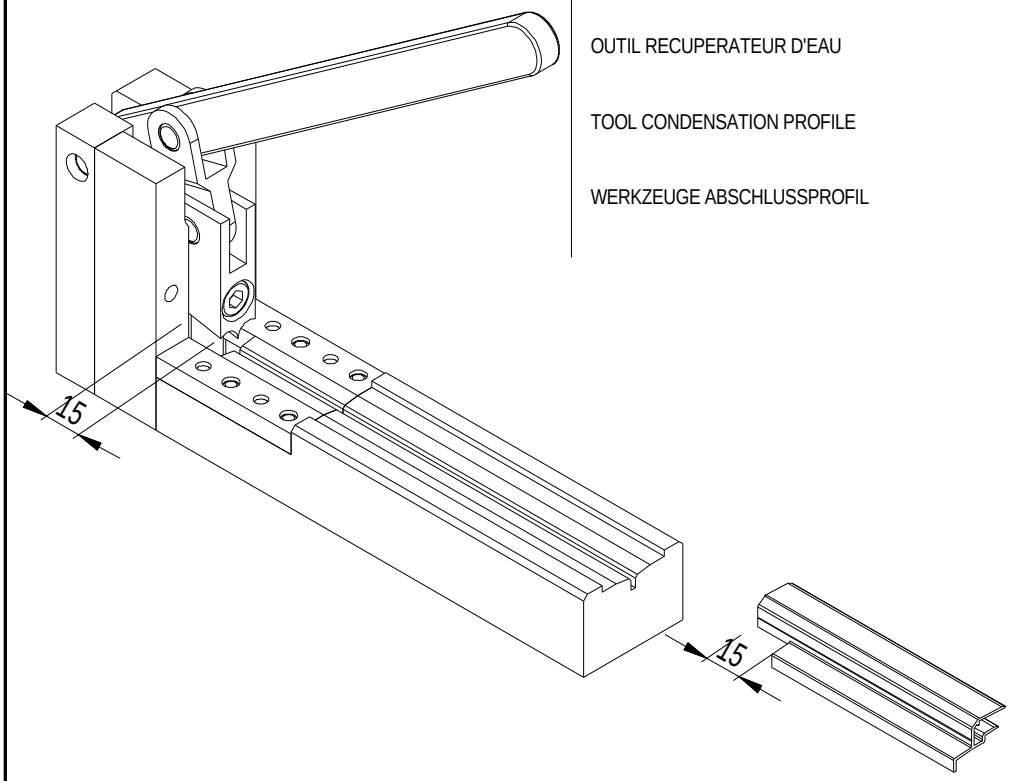

097.0231.00

GEREEDSCHAP KONDENSATIEPROFIEL

OUTIL RECUPERATEUR D'EAU

TOOL CONDENSATION PROFILE

WERKZEUGE ABSCHLUSSPROFIL

CR 120
007.0590.XX

007.0591.XX

007.0591.XX

007.0592.XX

007.0593.XX

007.0594.XX

007.0595.XX

007.0596.XX

007.0597.XX

TR 200
PR 200

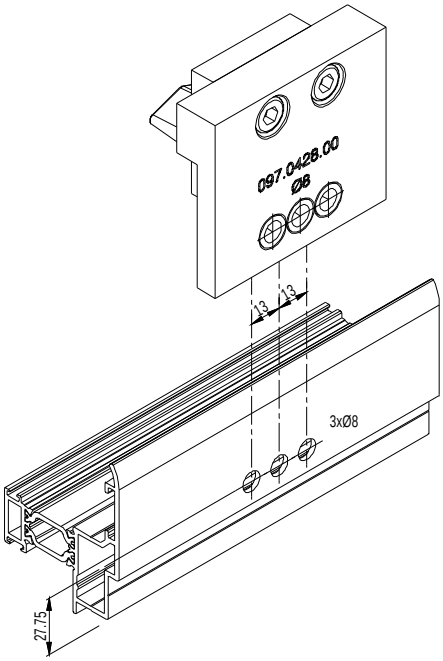

097.0428.00

BOORMAL ONTWATERING

CALIBRE DE PERCAGE DRAINAGE

BORING JIG DRAINAGE

BOHRLEHRE ENTWAESSERUNG

CR 120
007.0768.XX

CW 50
CW 60
PR 200
TR 200

D0041411

090.5615.--

TORX BIT MET GAT

TORX BIT AVEC TROU

TORX BIT WITH HOLE

TORX BIT MIT LOCH

CR 120

st./pc
090.5615.--

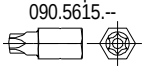

-
6.2 x 24.8

097.0429.00

BOORMAL VARIABELE HOEK

CALIBRE DE PERCAGE EQUERRE VARIABLE

BORING JIG VARIABLE CORNER CLEAT

BOHRLEHRE VARIABELER ECKVERBINDER

CR 120
007.0768.XX

CW 50
CW 60
PR 200
TR 200

BOREALE

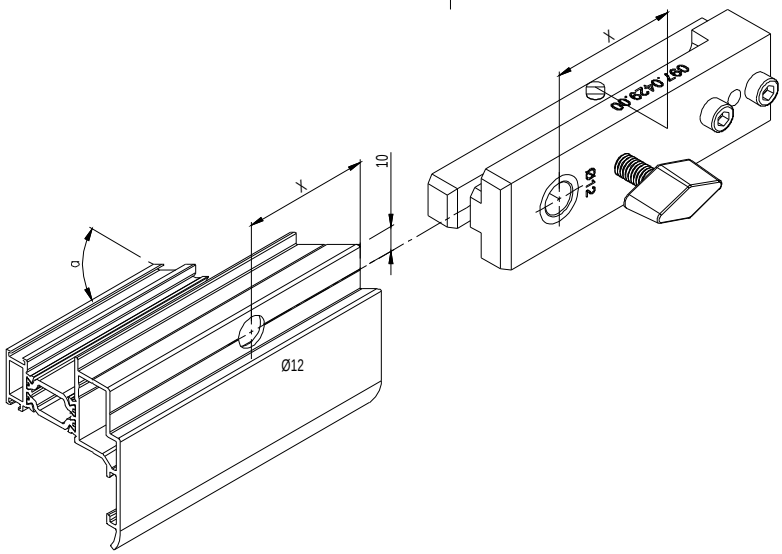

α	X
45	62.3
50	60.1
55	58.4
60	56.8
65	55.5
70	54.4
75	53.4
80	52.5
85	51.7
90	51
95	50.3
100	49.7
105	49.1
110	48.6
115	48.1
120	47.6
125	47.2
130	46.7
135	46.3

D0041413

086.9191.--

SMEERSTIFT
BROCHE DE GRAISSAGE
LUBRICATOR STICK
SCHMIERSTIFT

D0041414

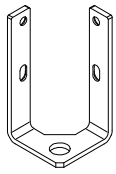	071.7262.-- BEVESTIGINGSSTUK PIECE DE FIXATION FIXING PIECE BEFESTIGUNGSSTUECK	CR 120		4 st./pc 053.5401.-- DIN 7504P 4.2 x 25
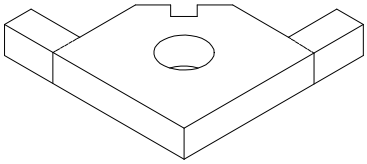	071.7281.04 AFDICHTINGSPROFIEL PROFILE D´ETANCHEITE SEALING PROFILE ABDICHTUNGSPROFIL	CR 120		
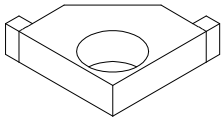	071.7282.04 AFDICHTINGSPROFIEL PROFILE D´ETANCHEITE SEALING PROFILE ABDICHTUNGSPROFIL	CR 120		
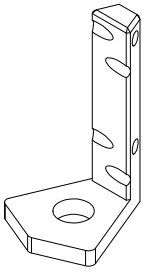	071.7263.-- BEVESTIGINGSSTUK PIECE DE FIXATION FIXING PIECE BEFESTIGUNGSSTUECK	CR 120		4 st./pc 050.5132.-- DIN 965 M5 x 6
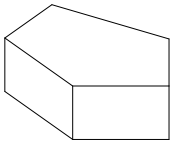	071.7284.04 AFDICHTINGSPROFIEL PROFILE D´ETANCHEITE SEALING PROFILE ABDICHTUNGSPROFIL	CR 120		
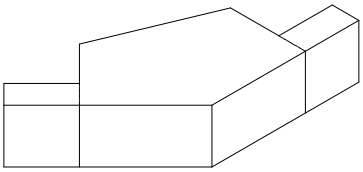	071.7285.04 AFDICHTINGSPROFIEL PROFILE D´ETANCHEITE SEALING PROFILE ABDICHTUNGSPROFIL	CR 120		

D3002365

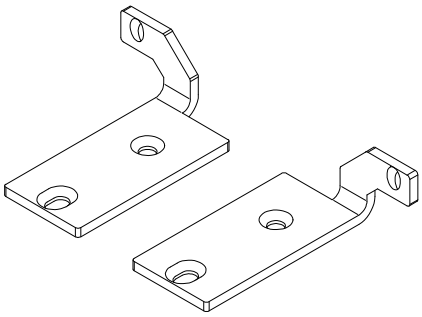	071.7266.-- BEVESTIGINGSSET SET DE FIXATION FIXATION SET BEFESTIGUNGSSATZ	CR 120		6 st./pc 053.5401.-- DIN 7504P 4.2 x 25
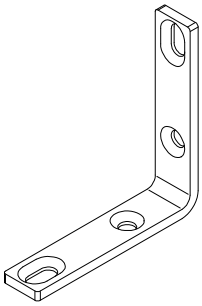	071.7267.-- BEVESTIGINGSSTUK PIECE DE FIXATION FIXING PIECE BEFESTIGUNGSSTUECK	CR 120		4 st./pc 053.5401.-- DIN 7504P 4.2 x 25
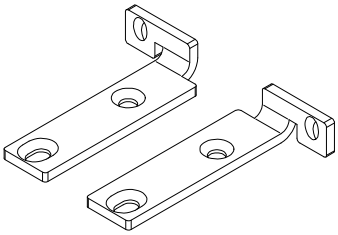	071.7270.-- BEVESTIGINGSSET SET DE FIXATION BRACKET SET BEFESTIGUNGSSATZ	CR 120		6 st./pc 053.5401.-- DIN 7504P 4.2 x 25
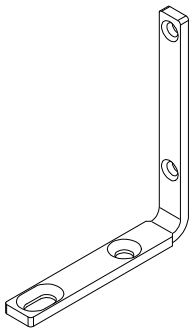	071.7271.-- BEVESTIGINGSSTUK PIECE DE FIXATION FIXING PIECE BEFESTIGUNGSSTUECK	CR 120		2 st./pc 050.5132.-- DIN 965 M5 x 6 2 st./pc 053.5401.-- DIN 7504P 4.2 x 25

D3002367

Reynaers Aluminium

Together for better